Fastrack® news
official SCCA member notification
EFFECTIVE FIRST DAY OF THE MONTH UNLESS OTHERWISE NOTED January 2012

CONTENTS

BOARD OF DIRECTORS	**1**
CLUB RACING	**14**
CRB Minutes	14
Technical Bulletin	20
Court of Appeals	27
Time Trials Admin. Council	NONE
SOLO	**30**
SEB Minutes	30
RALLY	**37**
RallyCross	37
RoadRally	39
LINKS	**41**

BOARD OF DIRECTORS

BOARD OF DIRECTORS MINUTES | Dec. 2-3, 2011

The SCCA National Board of Directors met in Topeka, Kan., Friday, December 2 and Saturday, December 3, 2011. The following directors participated: Jerry Wannarka, Lisa Noble, RJ Gordy, Michael Lewis, Dick Patullo, John Walsh, Bill Kephart, Todd Butler, Bob Lybarger, Phil Creighton, R. David Jones, Robin Langlotz, Marcus Merideth and the two incoming directors Steve Harris and Brian McCarthy.

The following SCCA, Inc. staff participated in the meeting: Jeff Dahnert, President/CEO, Richard Ehret, Vice President Finance; Howard Duncan, Vice President Rally/Solo & Special Projects; Terry Ozment, Vice President Club Racing; Eric Prill, Vice President Marketing and Communications; Colan Arnold, Vice President Member & Region Services; Aimee Thoennes, Executive Assistant, Peter Lyon, Risk Management.

Jim Wheeler, Member of the CRB and John Bauer, Technical Manager, Club Racing, participated in the meeting on Saturday, December 3, 2011.

The secretary acknowledges that these minutes may not appear in chronological order and that all participants were not present for the entire meeting.

A presentation was given on Brand Marketing by Pasquale and Angelo Trozzolo of Trozzolo Communications Group. An interactive session followed the presentation.

> **MOTION**: to approve the minutes of the October meeting. Lybarger-Gordy. PASSED unanimously.
>
> Note the following ammendment to the minutes in the Club Racing Rules section, first published in December 2011 Fastrack, on page 29:
>
> CORRECTION:
> In 9.3.29, add a new section D as follows:
> *"Except for classes in which there is only 1 required minimum weight (i.e., ASR, FB, FC, FE, FF, FM, FS, FST, FV, SM5, SRF), all cars shall display the correct minimum weight specified in the current GCR in a manner that is clearly legible to the scrutineers at the scales. Cars that are run in more than one class must display the correct minimum weight for each class so that it is clear which weight applies to each class."*

PRESIDENT'S REPORT
Staff worked closely with BoD Treasurer and Budget and Finance Committee to prepare 2012 budget draft for later review in BoD meeting. Overview presented of SCCA involvement in ACCUS (FIA liaison to US racing) related to presenting Formula 1 events. Dahnert provided a summary of the recently conducted staff Needs Assessment study. Results reflected many positive staff observations but also identified several areas that could be improved. SCCA has a presence at PRI sharing booth with SCCA Pro Racing. Dahnert and Prill will be attending IMIS show in Indianapolis for SCCA.

LEGAL REPORT
Pete Lyon provided an update on current and pending litigation. No action required by BoD.

RISK MANAGEMENT REPORT
2012 Insurance renewal included in the budget. There are active trademark infringement actions in several areas to protect SCCA interest.

FINANCE REPORT
Presented overview of proposed 2012 budget. Minor increases in insurance to fully recover cost of insurance. Club Racing $29.50 to $30.50; Solo $5.50 to $6.00; Rally $4.00 remains; $5 increase in race license fees and Runoffs fee increases $450 to

$500 and Solo Nationals fee increases $94 to $102. Discussion about large line items. BoD expressed their intention for staff to continue to take advantage of low interest rates.

MOTION: to approve 2012 budget as presented. Lewis/Jones. PASSED: 12-1 Opposed Merideth.

MARKETING/REGION SERVICES REPORT

Membership was 40,989 end of October. Discussion on membership and participation decreases and potential solutions: increase value to member, provide value at less cost, provide other membership options, lower cost tiers or premium tiered memberships.

Proposal presented by Dick Patullo on behalf of the Planning Committee for updating the Operations Manual to reflect current accepted practices by the regions for organizing a new region. The acceptance of these changes is intended to make it easier to form chapters with specific areas of interest.

MOTION to approve changes as presented on 1.2 Organizing a New Region. Patullo/Merideth. PASSED Unanimously.

1.2 Organizing a New Region

1.2.1 Following are the steps for organizing a new Region:

Organize a group of a minimum of 25 SCCA members in a geographical area. If the group is new to SCCA, representatives should join the Club through an existing Region. (After the proposed Region receives its Provisional Charter, the Regional Executive may approve membership applications).

Following the Guidelines for establishing a Regional Chapter (1.3 of Operations Manual), work with the Region Officers to establish a Chapter in the geographic area the proposed Region would operate within. The Chapter must operate for a minimum of one year prior to making a request to organize as a Region.

Organize *four* to *six* local events and *establish and maintain an active website and/or a newsletter* to inform members of meeting dates, activities, event results, officers, National office mailing address, and so on.

Elect officers who will serve as the first Regional officers.

Name the proposed Region. Names should identify the location of proposed Region, such as Atlanta, Ohio Valley, South Jersey.

Decide on the geographical limits of the proposed Region in county units. In no case shall Regional boundaries follow rivers, highways, and so on, unless the county line follows these boundaries.

Obtain approval in writing for the annexation of specific counties from the Regional Executive(s) whose Region(s) will be affected by the proposed Region.

Agree individually and collectively to abide by and obey the SCCA Bylaws and National policies of the SCCA.

Obtain a 501(c)(4) Exemption.

1.2.2 Obtaining a Provisional Charter

Upon completion of the eight steps above, apply for a Provisional Regional Charter on the form developed by the National Office. If approved by the Board of Directors, a Provisional Charter will be granted.

1.2.3 Obtaining a Full Charter

The new Region shall take immediate steps to incorporate in the state of its domicile and to adopt Regional Bylaws. The Articles of Association (Incorporation) must include affiliation with the Sports Car Club of America, Inc. and must be consistent in purpose with those of SCCA. The governing rules of the Region shall not conflict with the SCCA Bylaws or these operating procedures. The Regional Bylaws must specify that membership in the Region shall be limited to members of the SCCA. Photostats or true copies of both the Articles of Incorporation and the Bylaws must be forwarded to the National office. Upon approval by the Board of Directors, a full Charter will be granted.

1.2.4 Transfer of Regional Territory

The President may transfer counties routinely, with the approval of all Regions concerned and with the full disclosure of reasons. However, if a transfer affects a Division line or Area boundary, it must have Board of Directors approval.

1.3 Guidelines for Establishing a Regional Chapter

1.3.1 Reasons for a Chapter

A group of SCCA members residing in one general area who are more than a reasonable distance from the city where regular Regional meetings are held *or are interested in activities not currently offered by the Region.*

1.3.2 Number of members
A minimum of ~~15~~ *10* members are needed to form a Chapter.

1.3.3 Bylaws
The Chapter must abide by the SCCA Bylaws and the Bylaws of the Region.

1.3.4 Officers
A minimum of ~~four~~ *one* member to coordinate with the Regional officials: suggest Chapter president, secretary, treasurer or activities chairman. A representative from the Chapter is to be a member of the Region's Board of Directors, Executive Committee or *directly report to a designated Region Board member or committee* and must be willing to attend several regular meetings of the Region.

1.3.5 Memberships
All memberships solicited and received by the Chapter must be processed through the Region/National office. No membership will be unreasonably delayed or withheld.

1.3.6 Regional Dues *& Chapter Financial Transactions*
Regional dues of the Chapter members *will be remitted to the Region.* ~~must be maintained in the Region office with all expenses of the Chapter paid by the Region~~. *SCCA related expenses are the responsibility of the Chapter; however the Region shall have access to any SCCA related transactions.*

1.3.7 Chapter Members
Chapter members are, at all times, considered members of the Region and extended the same courtesies, including receipt of the Region's publication, to which the Chapter is encouraged to contribute.

1.3.8 Chapter Sanction Requests
All Requests for Sanction, Calendar Listings, licensing of competitors and officials, and so on, are handled through the Region *or through individuals designated by the Regional Executive*.

1.3.9 Permission for Chapter Events
The Chapter may hold, without permission from the Region, non-sanctioned events which are of a local nature, providing they do not conflict with the Region events, sanctioned or non-sanctioned.

1.3.10 Regular Meetings
The Chapter is encouraged to hold regular meetings and to participate and support Region events. Officers of the Chapter ~~must~~ *are* encouraged to be in continuous, regular communication with the Region's officers, and vice versa.

1.3.11 Annual Chapter Renewal
Each Chapter must update its officer information annually. The deadline for submitting documentation shall be February 15 of each year.

1.4 Guidelines for Special Purpose Chapters

1.4.1 Reasons for a Special Purpose Chapter
A group of SCCA members who are interested in specialized activities not normally offered by the SCCA Regions or who have a commonalty of background or automotive interests outside the norm.

1.4.2 Number of members
A minimum of 10 members are needed to form a Special Purpose Chapter.

1.4.3 Bylaws
The Special Purpose Chapter must abide by the SCCA Bylaws.

1.4.4 Officers
A minimum of one member to coordinate with the National office.

1.4.5 Memberships
All memberships solicited and received by the Special Purpose Chapter must be processed through a Region or the/National office. No membership will be unreasonably delayed or withheld.

1.4.6 Regional Dues & Chapter Financial Transactions
Regional dues of the Special Purpose Chapter members will be remitted to the Region of each members choosing. Special Purpose Chapter members must be a member of some region however the Special Purpose Chapter has no affiliation with any particular Region. All expenses of the Special Purpose Chapter including SCCA related expenses are the responsibility of the Chapter

1.4.7 Chapter Members
Special Purpose Chapter members are, at all times, considered members of their home Region and extended the same courtesies, including receipt of the Region's publications.

1.4.8 Special Purpose Chapter Sanction Requests
All Requests for Sanction, Calendar Listings, licensing of competitors and officials, and so on for Special Purpose Chapters are to be submitted directly to the national office by the Chapter president or his designee. As a Special Pupose Chapter has no territory, Special Purpose Chapters must have in writing the permission to sanction events in affected regions territory. Such permission shall not be unreasonably withheld.

1.4.9 Permission for Special Purpose Chapter Events
The Chapter may hold, without permission from the Region, non-sanctioned events which are of a local nature, providing they do not conflict with the Region events, sanctioned or non-sanctioned.

1.4.10 Regular Meetings
The Special Purpose Chapter is encouraged to hold regular meetings and events and to participate and support local Region events.

1.4.11 Annual Chapter Renewal
Each Special Purpose Chapter must update its officer information annually. The deadline for submitting documentation shall be February 15 of each year.

1.5 Competition Events
Regions must conduct their events under the sanction of the SCCA. The SCCA may grant or withdraw such sanctions for individual events or for specific categories of events. An SCCA sanction is considered to be a privilege and responsibility. Regions that fail to conduct events within the policies, standards, rules and regulations of SCCA are subject to penalties and restrictions ranging up to and including revocation of Charter as determined by the Board of Directors. Specific procedures for handling such cases are described in I.C.1.1.5 of the SCCA Operations Manual.

Discussion continued on tiered membership products. It is the desire of the planning committee to receive the tiered product information by February 1, 2012.

Arnold updated the Board on his project list. Auto renewal has been fully implemented and is available to membership online and through mail in membership forms. Multi-year membership is available online and updated statements are being printed with those options.

It was a voluntary year for regions to report race results and they are accepted online. Goal of compiling race results is to provide automation and accurate results. Format for Solo data participation has been finalized and working with the scoring software company to provide the update and change free of charge to the regions. Next step for participant data collection is focused on the worker data. This process will begin in February 2012.

Review of National Convention agenda. It is the desire of the Board of Directors that staff pursue online streaming of the Annual Meeting and Award Banquet as a service to our members. Staff was tasked with then putting segments on various media outlets i.e. YouTube.

The Board requested staff to create a document with brief bios and a photo for all Program Board and BoD members. The purpose of the document is to promote familiarity and it will be shared prior to the convention.

MARKETING/COMMUNICATIONS REPORT
Eric Prill updated the board on the purchase of the three Pace trailers (two for Solo and one for SCCA Pro Racing) which had been on loan from Pace. Pace's bankruptcy filing induced the need for securing the trailers as SCCA property. An update was given on marketing and promotion efforts which are in progress. Haymarket digital issues have been well received; 175 members have chosen to "opt out" of receiving the hard copy of the magazine. A special edition focused on new members will be available sometime in January.

FOUNDATION/RALLY AND SOLO REPORTS
Howard Duncan updated the BoD on the candidates for the SCCA Foundation Board and submitted a recommendation to the

BoD for their approval. There was discussion on a conceptual shift of the Foundation board to a "program management" focus.

RoadRally showed a 20% decrease in participants and events for 2011. Approximately 1200 members participate in RoadRally. Discussion about RoadRally future.

RallyCross showed a decrease in participation but an increase in # of events by 6.5%. Weather related issues required event cancellations. There was a significant increase in participation and attendance at the RX National Championship. Opportunities for program and participation growth reside in the success and willingness of Regions to begin RX programs. The typical RX participant is in a younger demographic compared to our other competition programs. The RXB is working on their development plan and a potential national challenge series to drive participation.

Solo demonstrated an 8.5% decline in participation. Participation numbers from the past 6 years were reviewed and discussed as well as possible solutions. The convention sessions for solo will focus on customer service and operational training.

Duncan reported on the restructuring of the Rally/Solo department.

CLUB RACING REPORT
Discussion of Alternative Driver's school program and suggested streamlined process.

MOTION: to approve the following GCR changes, effective 1/1/2012. Walsh/Merideth PASSED unanimously.

3.3.5 (new Section) Sanctioning for Alternative Driving Schools
SCCA Regions wishing to hold a Driver's School using the Alternative Driving School method need to submit a sanction applications to the National office no less than 10 days prior to holding a school and include the following:

A. Sanction Application Form
B. Name of student/s
C. Name of Instructor
D. Date of "school" elements (classroom/on-track)
E. Brief outline of the training components/schedule
F. Approval letter from one of the following:
    a. Divisional Chief Driving Instructor
    b. Divisional Driver Licensing Administrator
    c. Certified Driving Instructor (list of who is considered Certified to be provided by Divisional Chief Driving Instructors)
    d. Executive Steward

Appendix B.
1.7 (new Section)
Alternative Driver Schools (GCR Section 3.3.5) are not required to appear on Divisional Schedules, but do need to be sanctioned.

Discussion of the structure of the Time Trials program. It was agreed to use 2012 to look at ways to equip the TTAC with the tools it needs to run a successful program.

Continuous issue of inconsistent tracking of cars and entries and the subsequent impact on insurance recovery. No changes proposed at this time, but the process is under review. Club Racing staff will explore alternative methods of cost assessment for 2013 and provide recommendations to the Board. Purpose is to accurately predict insurance recovery while minimizing negative impact on Region budgets and processes. Efforts will be attempted to provide this information at an earlier date so that the data can be used by the Regions when preparing their annual budgets.

MOTION: to approve the continuation of the tow fund program for 2012. Langlotz/Patullo. PASSED Unanimously.

2011 Runoffs financial recap given. Discussion of 2011 budget which was based on 600 entries. Taking the lower entry into consideration as the 2012 runoffs budget was developed.

Jim Wheeler presented the recommended rule changes from the CRB.

MOTION: to approve the following CRB rule changes. Merideth/Creighton. PASSED Unanimously.

GCR
#6394 – November
Delete Appendix C.3 CREW LICENSES and renumber subsequent sections. [The original insurance requirement for instituting crew licenses no longer applies. Only membership is required for access to hot areas and insurance

coverage.]

Formula
FM

1. #6353 – November
In 9.1.1.F.19.A, add at the end: "*Titanium hardware is not permitted. Tubular or Hollow bolts are not permitted*."
In 9.1.1.F.19.B, change as follows: "Brake fluid, ~~fasteners~~, clamps, and radiator hoses are unrestricted."
In 9.1.1.F.19, add a new subsection D as follows: "*Ceramic bearings are not permitted. All bearing components must be ferrous metal, except for bearing retainers and bearing cages. This definition is applicable to all bearings, including, but not limited to, wheel bearings and transmission / gearbox bearings."*

Super Touring

1. #4920 – November
In 9.1.4.G.20, change from "~~Turbochargers may not be added to engines that did not originally come equipped with one.~~" to "*Turbochargers may be added to engines that did not originally come equipped with one on a case by case basis.*"

2. #6217 – November
Delete 9.1.4.D.1.b in its entirety. [Splitter damage allowance. This should not be a judgment call. Either the rule is met or not.]

STU

1. #6395 (CRB) – November
In 9.1.4.2.B.2.c and 9.1.4.3.B.2.c, change as follows:

The entire rear wing assembly, including the end plates and any wicker, shall be mounted a minimum of 6.0 inches below the peak of the roof *or roll cage main hoop whichever is higher, measured at the highest point*. Cars with a ~~wagon-style or hatchback~~ *wagon*back/notchback/hatchback style body ~~(e.g., Mazda Protege 5, Civic hatchback)~~ may have the rear wing *assembly, including the end plates and any wicker,* mounted a maximum of 4.0 inches above the ~~roofline~~ *highest point of the roof*. ~~The mounting position will be measured between the highest points of the roof and the wing assembly.~~ *For this subsection, a wagonback/notchback/hatchback style body (or variations of these) is a car in which the rear edge of the roofline is no more than 28.0 inches forward of the rearmost bodywork as measured along the vehicle longitudinal centerline.*

2. #6567 – November
In 9.1.4.2.I.2, add at the end of the first paragraph: "*No turbocharged engines with more than 4 cylinders will be classified.*"

Production

1. #5702 – November
Add a new subsection 9.1.5 E.6.h as follows: "*Screens, block-off plates or tape that serve only to protect or restrict air flow to the radiator(s) and/or oil cooler(s) are unrestricted, but must be located behind the stock grille or, for cars that do not have a stock grille, a minimum of 2" behind the stock radiator/cooler opening.*" [Note: this replaces the rule previously approved by the BoD in October.]

2. #6256 – November
In 9.1.5.E.9.a.6, Production, change the fifth sentence as follows: "*Stock* door hinges must be retained *and mounted* in their stock location."

#6278 – November
Under the current rules the specifications are based upon the base model of each car. If the base model came with a rear lip spoiler, then it is allowed. It is also allowed if a rear spoiler is listed on the car's spec line. The CRB will clarify the language of 9.1.5.E.9.a.16 to reflect this as follows: "*16. Stock or aftermarket rear spoiler or wing not permitted, unless factory installed for the listed base model or permitted on the car's spec line.*"

Showroom Stock
SSB

1. #3824/#6226 – November
In 9.1.7, SSB, Chevrolet Camaro V-6 (96-02) and Pontiac Firebird V-6 (96-02), add to Notes: "*SP-141 front and rear springs permitted; SP-8316 front sway bar and SP-8327 rear sway bar permitted; UMI-2006 shock tower brace permitted.*"

SSC

1. #6192 – November
   In 9.1.7, SSC, Hyundai Tiburon V-6 (03-08), add to Notes: "*Accusump permitted.*"

   Touring
   T1
1. (multiple letters) – November
   In 9.1.10.D.5, add a new item as follows: "*c. All T1 cars are allowed to replace OEM upper and lower A-arm bushings with polyurethane or delrin bushings.*"

   T2
1. #3482 – November
   In 9.1.10, T2, BMW Z4 M Coupe (2007), change weight from ~~3325~~ to *3475* and add to Notes: "*Turner springs permitted: front TMS600-10-250, rear TMS650-8-250; Ground control # MZ4Swaybarset permitted.*"

2. #6474 – November
   In 9.1.10, T2, Lotus Exige (06), add to Notes: "*Sector 111 Eliminator V3 permitted to replace rear panel.*" [Other items not recommended.]

The Board engaged in an extensive discussion of the 2.5 rule and class alignment.

MOTION: Creighton/Langlotz to instruct the CRB to come up with a plan to deal with low subscription classes, such as STO, for 2013 as part of their alignment strategy. PASSED: 11-2 Opposed: Lewis and Langlotz.

MOTION: Patullo/ Merideth. As part of the plan for the CRB to actively manage classes using spatial planning, it was moved to make STL a provisional national class for 2012 with the ability to participate in the Runoffs in STU as proposed by the CRB. PASSED 9 for, 3 opposed Creighton, Langlotz, Lewis and 1 abstain Wannarka.

MOTION: Creighton/Patullo to add "that has been" to the sentence in 9.3.20.C.2 (Driver's Safety Equipment, Required Equipment) as shown below. PASSED unanimously.

> "Effective 1/1/12 the use of a head and neck restraint system *that has been* certified in accordance with SFI 38.1, FIA 8858-2002 or 8858-2010 is required; an SFI 38.1 or FIA 8858-2002 or 8858-2010 label must be properly affixed to the device."

MOTION: Lybarger/Patullo. To waive section B.1.1.2.A and hold only 5 National races in CenDiv for the 2012 season. PASSED unanimously.

Planning committee presented some suggested improvements for the Staff to consider to the Runoffs: shorten schedule (require drivers to be there no more than 4 days), consider annual venue rotation, and explore alternative financial models with tracks.

Discussion of options for 2012 Runoffs Qualifications to reward participation, even for those who are unable to meet outside points requirements.

MOTION: Butler/Creighton. An alternate qualification method shall be added to the 2011 qualification options which carry over to 2012. Eight national finishes (regardless of position) shall qualify a competitor for the Runoffs. PASSED – Unanimously.

Presentation by Planning Committee for a "Majors" program. The "Majors" program was developed to focus on new opportunities for classes within a geographic area designed to cluster competition. For 2012 the pilot program will hold events in the following Divisions: Midwest, Rocky Mountain and Southwest.

MOTION: Lybarger/Merideth. To approve the plan as presented by the Planning Committee for the Majors Program for 2012 with the following changes to the GCR 3.1.1.e and 3.1.4.A In 2012, the VP of Club Racing with approval of the Chairmen of the Board of Directors, BoD Planning Committee, CRB and Stewards, may alter the GCR requirements for the conducting of an event as needed to support the Majors Pilot Program in MW, SW and RM Divisions. PASSED unanimously.

Kephart, on behalf of the Planning Committee, thanks outgoing directors Gordy and Merideth for their support, commitment and contributions to the development of the Majors Plan while serving on the Committee.

MOTION: to accept proposed RX rule changes. Butler/Gordy. PASSED unanimously.
1. Adding the new class of Modified Rear Wheel Drive with its consequential changes to the Modified Class

structure:

6.2.E. Rally Modified Categories
Modified ~~Two~~ Front Wheel Drive (M~~2~~F)
Modified Rear Wheel Drive (MR)
Modified All Wheel Drive (M~~4~~A)

2. Allowing scoops and wings in Prepared Categories:
6.2.D.20. Addition of rear wings and hood scoops/vents is allowed provided that either 1) it is a production part which is standard or optional equipment of a US model of the vehicle or 2) it is listed in the vehicle manufacturer's US accessory catalog for that vehicle for normal highway use. Parts must be installed as directed by the manufacturer. Exact replicas (including weight) from alternate sources are also permitted.

3. Changes to 6.3.G:
6.3.G. Tires must be in good condition, with no cord or belts showing or cracks in the tread or sidewall. A space-saving wheel designated by a manufacturer for temporary low speed use and for transiting a short distance may not be used for competition regardless of the type of tire installed. Tires offered for two, three or four wheeled motorbikes are not allowed. This includes motocross, dual-sport and ATV tires that are not designed to withstand cornering side-loads that can be generated by an automobile of substantially higher curb weight.

4. Require catalytic converters in Rally Prepared Category:
6.2.D.21. Any high flow catalytic converter(s) are allowed. Multiple catalytic converters may be replaced by a single unit. The inlet of the single replacement converter may be located no further downstream than 6" along the piping flow path from the original exit of the final OE converter. Vehicles not equipped with a catalytic converter as original equipment are not required to have one.

5. Allow replacement of radiators in Rally Prepared Category:
6.2.D.22. Engine cooling radiators may be replaced with alternate parts subject to the following restrictions:

1. Radiator core dimensions (width, height, thickness) must be no smaller than the standard part.
2. Radiator must mount to OE radiator mounts.
3. Fluid capacity and dry weight of the radiator must be no less than that of the standard part. Installation of an alternate radiator may serve no other purpose (e.g. to allow a cold air intake passage).

In addition, the engine fan and fan shroud (unless it serves another purpose, e.g., as an alternator/generator mount) may be removed, modified or replaced. Electrically driven fans are allowed.

6. Add section to 6.3 Vehicle/Driver Safety:
6.3.Q. All vehicles must have adequate operable forward lighting to participate in night or low light events.

7. Update helmet regulations:
6.3.P. ~~Snell 1995 (SA95, M95, or K98) or newer labeled helmets are approved for use. This is a minimum standards for use in RallyCross, other approved helmets are:~~

~~**1.** British Standards: BS 6658-85 type A/FR, including all amendments.~~
~~**2.** SFI Foundation, Inc; SFI Spec 31.1~~
All helmets meeting the latest or two immediately preceding Snell Foundation standards (SA2010, SAH2010, SA2005, SA2000, M2010, M2005, M2000, K2010, K2005, K98), SFI standards 31.1, 41.1, 31.1A, 31.2A, 41.1A, 41.2A or British spec BS6658-85 type A/FR are acceptable.

8. Accommodate for the use of biodiesel and cleanup language:
6.2.C.9 Fuel may be any type of unleaded, E85, or diesel/biodiesel fuel commonly available ~~at the pump~~.

9. Add wording to 5.3 (second paragraph) to include hay bales:
… Corner limits must never be marked by curbs, buildings, poles, trees, soft shoulders, hay bales or other hazards likely to cause damage to a vehicle or likely to cause a vehicle to overturn. …

Club Racing reported on options for class-wide compliance program as requested by the BoD at their October meeting. Tech is a core competency for SCCA, and discussion continued over implementation of a program that would be fair and equitable. No decision was reached at this time

MOTION: to approve the TTAC Rules as presented. Lybarger/Langlotz. PASSED Unanimously.

Explanations are highlighted
Additions shown in Blue
Deletions shown in Red

Multiple edits to replace references to competitors with participants to reflect the non-competition basis of the Level 1 program

Flag rules - updated to reflect current GCR wording with additional TT specific clarifications as required

4.X.3. FLAGS
The following flags may be used at Time Trials events:

RED FLAG (SOLID RED)
Displayed at each station and on the Starter's stand – EXTREME DANGER – THE SESSION HAS BEEN STOPPED. Come to an immediate, controlled stop at the side of the race track (preferably before and within sight of a staffed station or where specified in the event Supplemental Regulations). When released by an official, proceed cautiously to the pits. Once a red flag has been displayed, it will not be withdrawn until all cars have come to a stop.
NOTE: THE RED FLAG CAN ONLY BE DISPLAYED BY ORDER OF THE CHIEF STEWARD AS RELAYED THROUGH RACE CONTROL.

GREEN FLAG (SOLID GREEN)
When displayed, the green flag indicates that the course is clear, and the event is underway. The green flag is ordinarily shown only by the Starter.

YELLOW FLAG (SOLID YELLOW)
STANDING YELLOW – Take care, Danger, Slow Down, NO PASSING FROM THE FLAG until past the emergency area.
WAVED – Great Danger, Slow Down, be prepared to stop – NO PASSING FROM THE FLAG until past the emergency area.
NOTE: A driver may encounter several flags before reaching the emergency area. The requirements are still the same: SLOW DOWN, NO PASSING.

BLUE FLAG (BLUE WITH DIAGONAL YELLOW STRIPE)
Another competitor is following very closely or is trying to overtake. This flag may be displayed standing or waving, depending upon the speed differential.

SURFACE CONDITION (YELLOW WITH VERTICAL RED STRIPES)
Take care. A slippery condition exists, or debris is present on the racing surface. This flag is displayed standing.

WHITE FLAG (SOLID WHITE)
Caution and take care for a slow moving race car, ambulance or other emergency vehicle on the racing surface. The standing flag is displayed for 2 flag stations prior to the vehicle in question. In addition, a standing white flag will be displayed during the first lap of each race group's first session of the day to indicate the location of the flagging stations.

BLACK FLAG (SOLID BLACK)
CLOSED BLACK FLAG (Furled) – Pointed or shaken at an individual car from the Starter's stand (optionally, accompanied by a number board indicating the car number): WARNING for driving in an unsafe and/or improper manner. Continued unsafe and/or improper driving will result in an OPEN BLACK FLAG.
OPEN BLACK – Displayed from the Starter's stand with a number board indicating the car number: Proceed directly to the pits and the location designated by the Chief Steward or event Supplemental Regulations for consultation with Officials. DO NOT TAKE ANOTHER LAP.
NOTE: This flag and number board may also be displayed at station(s) elsewhere on the course.
OPEN BLACK, DISPLAYED AT ALL STATIONS – The session has been stopped; all cars must stop racing, and proceed directly and immediately to the pits, exercising extreme caution. This flag will be displayed with an 'ALL' sign at the Starter's stand and the sign may also be shown at station(s) elsewhere on the course.
NOTE: THE BLACK FLAG CAN ONLY BE DISPLAYED BY ORDER OF THE CHIEF STEWARD AS RELAYED THROUGH RACE CONTROL.

MECHANICAL BLACK FLAG (BLACK WITH ORANGE BALL)
Displayed from the Starter's stand with a number board indicating the car number. There is a mechanical problem with the car. Proceed directly to your pit or the location designated by the Chief Steward or event Supplemental Regulations. DO NOT TAKE ANOTHER LAP.
NOTE: This flag and number board may also be displayed at station(s) elsewhere on the course.

CHECKERED FLAG (BLACK AND WHITE CHECKS)
Displayed at Finish to indicate that the session is finished. Continue cautiously to the pits.
This flag is optional with the Event Steward and may be replaced by a prominent sign, preferably a banner across the course, indicating the finish line.
~~**RED** - Clear the circuit for emergency vehicle traffic by stopping off course TO THE RIGHT or AS FAR TO THE RIGHT AS CIRCUMSTANCES PERMIT. Stay in car with safety equipment on, do not move until directed by a worker or official.~~
~~**GREEN** - When displayed, the green flag indicates that the course is clear.~~

~~**YELLOW** - Take Care, Danger, Slow Down, No Passing. Waved - Great Danger, Slow Down, Be Prepared To Stop, No Passing.~~
~~**YELLOW WITH VERTICAL RED STRIPES** - Take care. A condition exists on the road which cannot be corrected in a reasonable time during which competition is halted.~~
~~**BLACK** - Return to the Pits immediately and see an Official for instructions.~~
~~**BLACK WITH ORANGE DOT** (MEATBALL) - You appear to have a mechanical problem. Continue offline and cautiously proceed back to the Pits.~~
~~**CHECKERED** - You have completed your run. Slow and pull off the course into the assigned area. This flag is optional with the Event Steward and may be replaced by a prominent sign, preferably a banner across the course, indicating the finish line.~~
~~Additionally, at events where passing is permitted, the following flag may be used:~~
~~**BLUE WITH DIAGONAL YELLOW STRIPE** (Motionless) - Another driver is following you, you should give way at the next designated passing zone by moving to the right, signaling and slowing down as necessary. All designated passing zones shall be clearly marked on both ends by rubber cones. Clear hand signals shall be given by the overtaken driver and no pass by an overtaking driver shall be attempted without a signal. Overtaking drivers should be allowed to pass at the first passing zone. The driver being overtaken must take action as defined by the event officials to allow a safe pass before the end of the passing zone. Good judgment by the driver being overtaken is required so that a passing flag should not be required for the overtaking driver to be allowed to pass. Passing flags shall be obeyed. The designated passing zones shall be specified at the mandatory drivers' meeting.~~

Passing Rules – Clarified to ensure the overtaken stays on line
3.X.3.J Refrain from passing unless given a point-by in a designated passing area. The overtaking car is responsible for safely moving around the car being overtaken after being given a point by.
3.X.3.K Be aware of other drivers and use point-by techniques to yield to faster cars. The car being overtaken shall hold their position while being passed.
Participation Logbooks - Clarification on the use of the TT participation Logbook
3.2.3.C Present a TT Participation Log Book at events. For first time students, Participation Log Books will be available at registration. All students must present the TT Participation Log Book at registration and it will be returned with any notations at the end of the event. Students with Time Trials Competition Licenses or higher are not required to present TT Participating Log Books for notation so long as their SCCA membership and License are current.

7.3. TIME TRIALS PARTICIPATION LOG BOOKS

Time Trial Participation Log Books and/or Time Trial Competition Licenses may be used as documentation of on-track experience that may gain credit towards an SCCA Club Racing Competition License at the discretion of the SCCA Drivers School Chief Steward.

Observers Reports – Clarification to paperwork to be submitted and who should be copied
6.12 The organizing region will send Official ~~Race Results~~ Observers Report to the National Office and TT Divisional Program Manager within ten (10) days of the event.
AERODYNAMIC SKIRTS - (Applies to Levels 2,3,4) Clarification to exceptions for use of aerodynamic skirts
10.11 Aerodynamic skirts are prohibited in Time Trials competition events except ~~for in the Specials class where moveable side skirts are allowed or as~~ where allowed by Regional classes defined by Supplemental Regulations.
~~**Level 1 Only**~~
Reference to Spec Books – Remove reference to classes not allowed in PDX
1.1.4 The TTR shall not be given a strained or tortured interpretation and shall be applied in a logical manner, keeping in mind that it cannot specifically cover all possible situations. The word "shall" (either positive "shall" or negative "shall not") is mandatory. The word "may" is permissive. If there is a conflict between the TTR and a Specification Book (~~PCS, GTCS,~~ TCS, SSS, ITCS, ~~SRCS, FCS~~) the Time Trials Rules has precedence over the Specification Book. If an item is not addressed in the Specification Book then the item is controlled by the TTR.
Minor Passengers – Allowance to permit minors to ride in a vehicle as a means to promote additional interest and gain new members
3.1.5.E.5 With the approval of the TT Chief Driving Instructor or TT Chief Steward, minors, aged 16 and over, may ride with an instructor or their parent, or legal guardian, who is approved to drive without an instructor. All other requirements for passengers must be met.
Vehicle Inspection – Remove reference to items only allowed on formula cars which are not allowed in PDX
9.2.1.F Hood and Engine Compartment - Shall be securely fastened. Battery shall be securely mounted with positive terminal covered. Throttle return shall be consistent and positive ~~(more than one spring must be used for redundancy).~~
9.2.1.I Lights - Brake lights ~~on cars so equipped and taillights on Formula cars~~ shall operate properly.
Restraints – (Levels 1 & 2) Clarifications for use of OEM restraints in unmodified cars and 2" harnesses for participants with H&N devices

10.8. REQUIRED DRIVER SAFETY EQUIPMENT

Please note that for PDX (Level 1) events, the following guidelines apply for restraint systems - ~~All cars that are required to install roll bars must comply with Section 12 of the TTR~~. Cars equipped with ~~that choose to install~~ a roll bar may use stock restraint systems, provided that the roll bar does not interfere with the function of the system in any way, or restraint harness per Section 12 of the TTR.
12 All drivers in PDX (Level 1) events may utilize factory/OEM restraints or a restraint harness meeting the specifications of section 12.1 in lieu of the factory/OEM restraints.

12.1.1 a four point restraint system, for use in enclosed automobiles only, may be employed where the driver is seated in an upright position. Only 4 point restraints that incorporate a manufacturer designed method for prevention of submarining may be used. Five, six or seven-point systems are highly recommended in all cars including automobiles where the driver is seated in an upright position. ~~Open or convertible cars in pdx (level 1) or club trials (level 2) events shall adhere to the restraint requirements for track trials (level 3) and hillclimb (level 4) events.~~
12.1.9 ~~FIA c~~ Certified nominal 2-inch shoulder harnesses are allowed when ~~the HANS®~~ a head and neck restraint system meeting SFI 38.1 or FIA 8858 device is used by the driver. SFI 2-inch shoulder harnesses are not currently allowed. Should the driver, at anytime not utilize the ~~HANS®~~ head and neck restraint device, the nominal 3-inch shoulder harnesses is required. ~~The replacement cycle for the 2-inch harnesses shall be per TTR Section 12.1.7.B.~~

Level 2 – CT
Street Legal Definition – Added to clarify meaning of Street Legal as referenced elsewhere in the TTR

2.18. STREET LEGAL
A car that meets local requirements for inspection (if applicable) and the car has CURRENT and VALID license and registration. 3.2.3.E Drive a vehicle which meets the inspection required in TTR Section 9. Proof of current Annual Tech Inspection in Time Trials or Club Racing shall meet these requirements. Window net and arm restraint requirements are waived for cars that meet the definition of street legal. Roll bar requirements are listed in TTR Section 11.
Official – Correction to formatting and clarification to which types of stations may be manned by drivers

3.2.4. Officials and Workers
The following Officials and Workers are required at events as a minimum.
B. Workers to man each flag or observation station. ~~There should also be a~~
C. At least one pit worker (in addition to a flagger if present at the pits) to direct drivers on course and communicate with drivers in the pits.
D. Drivers may be used to man ~~these~~ flag, observation and pit stations when not on track.
Roll Bar – correction to align with Level 1 as previously intended

11.2. CLUB TRIALS (LEVEL 2)
Roll bars or cages will NOT be required in those cars prepared to Stock, Street Prepared, Street Touring or Street Mod specifications as found in the Solo rules, except for Convertibles and Targa* top automobiles. These cars must have either a roll bar meeting Section 11 of the TTR, a non-mechanical factory roll bar/roll over protection (i.e. no pop-ups), or a factory hard top using the factory mounting hardware and mounting points. Owners of cars equipped with factory roll bar/roll over protection must present documentation stating that the device is a roll bar or roll over protection at the time of vehicle inspection (a factory issued Owner's or Shop Manual will fulfill this requirement) Targa* top (and T-top) automobiles may forgo the roll bar requirement under the condition that the Targa bar meets the height requirement set forth in 11.2.1.B. Any convertible that runs with a TTR legal roll bar must do so with convertible top down and in the latched position.Any car modified beyond any part of those rules must be equipped with a roll bar minimum. Any car modified beyond any part of those rules must be equipped with a roll bar minimum. This includes cars prepared to the Solo classes of Prepared or Modified. Any car built to a GCR class MAY NOT interchange preparation rules to circumvent the roll bar requirement (for example, even though an IT car may run in the Street Prepared Classes at a Solo event, it does not qualify for the roll bar exception in this case, and must have a roll bar to run any Time Trials event.

Level 3 (Track Trials) & 4 (Hillclimbs)
Novice Permits – Clarification of Novice Permit collection and use
~~3.2.C~~ TT Novice Permits must be collected at Registration. They will be available from the TT Chief Steward (or designee) at the end of the event.~~The Chief Driving Instructor must collect all Participation Log Books prior to the start of the event. It is recommended that this be done at a Novice meeting. The Chief Driving Instructor will return the endorsed logs at the conclusion of the event (a group or individual debriefing is recommended).~~
Physical Requirements – Align to GCR requirements for frequency
7.3.1 Every applicant for a Competition License or Permit shall submit a completed physical examination on the SCCA form to the National Office. The examination date shall be no more than three (3) months prior to the date of application. A current physical examination form must be submitted every five (5) years for applicant's ages 16-39~~5~~; every three (3) years for applicants ages 40-49; every two (2) years for applicants ages 50~~36-5~~69; and every year for applicants age seven~~six~~ty plus (7~~6~~0+). A member shall maintain continuous membership and license for physical examination form to be valid.
Inspection – Clarification to annual period and update to throttle return spring language

9.1 A full and complete Technical and Safety Inspection shall be performed by a Licensed TT Tech Inspector (Official/Specialist) on each car ~~once a year~~ within the prior 12 months before competition. ~~The year shall be defined as the calendar year.~~ If the car passes Tech, the logbook shall be stamped with the "official" inspection stamp (if used), dated, and signed. Annual Tech may be performed in December of the preceding year.
9.2.1.H Hood and Engine Compartment - Shall be securely fastened. Battery shall be securely mounted with positive terminal covered. Throttle return shall be consistent and positive ~~(more than one spring must be used for redundancy).~~
Roll Cage Numbering – Clarification to numbering scheme

10.3.6.B The first two ~~letters shall digit(s) corresponding~~ shall correspond to the issuing Division's ~~region's~~ identity and ~~number~~ shall be separated from the balance of the ~~numbers (3 digits +)~~characters by a dash (-). This will be followed by a three (3) digit consecutively numbered serial number. This will be followed by another dash (-) and ~~It is highly recommended that the serial number be followed by another dash and~~ the issuing Region Identification Number ~~so to eliminate duplication and for vehicle history purposes~~. This would enable tracing of an identity number to the Division and specific Region of issue. Example: NP-XXX-101 would show that the serial number was issued in the Northern Pacific Division (NP) and by the Reno Region (101).
Helmets – Change to acceptable Snell dating – Aligns with GCR
10.20.2 Crash helmets approved by the Snell Foundation with Snell sticker 2005~~0~~ or later Special Application (SA05~~0~~), or by the

SFI with a SFI Sticker 31.1a for open faced helmets and a SFI sticker 31.2a for closed faced. NOTE: Snell M rating is not allowed for Track Trials (Level 3) and Hillclimb (Level 4) events. The back of each driver's helmet should be labeled with a minimum of the driver's name. The use of a head and neck support system is highly recommended. Accident damaged helmets should be sent by the driver or his or her representative to the Snell Memorial Foundation, 3628 Madison Ave., North Highland, CA. 95660 (ph) 916-331-5073 (attn. Edward B. Becker). Details of the accident should be included. Freon based total loss helmet cooling systems are not allowed.

Harness – Clarifications regarding acceptable use of 2" belts and SFI / FIA specifications

12.1.1 A five point system, for use in automobiles where the driver is seated in an upright position, consists of a nominal two (2) three (3) inch seat belt, an approximately three (3) inch strap over the shoulder type of shoulder harness, and an approximately two (2) inch anti submarine strap. A Five-point harness is considered a minimum restraint system. Six or seven-point systems are highly recommended in all cars including automobiles where the driver is seated in an upright position.

12.1.2 A six or seven point system, recommended for use in all automobiles, consists of a nominal two (2) or three (3) inch seat belt or an FIA approved two (2) inch seat belt (SFI 2-inch seat belts are not currently allowed), approximately a three (3) inch strap over the shoulder type of shoulder harness, and two approximately two (2) inch leg or anti submarine straps. The seven-point system also has an approximately two (2) inch anti-submarine strap.

12.1.10 ~~FIA c~~ Certified nominal 2-inch shoulder harnesses are allowed when ~~the HANS® device~~ a head and neck device system meeting SFI 38.1 or FIA 8858 is used by the driver. ~~SFI 2-inch shoulder harnesses are not currently allowed.~~ Should the driver, at anytime not utilize the ~~HANS® device~~ head and neck restraint system, then 3-inch shoulder harnesses is required. ~~The replacement cycle for the 2-inch harnesses shall be per TTR Section 12.2.8.B.~~

Discussion on the COA Reporting structure.

> **MOTION**: to table discussion for COA and Stewards programs until Feb 2012 board meeting. Patullo/Kephart. PASSED 12-0-1 Merideth abstained.

Chairman Wannarka highlighted some of the many contributions made by RJ Gordy and Marcus Merideth while serving on the Board and thanked them for the many hours they dedicated to the Club while serving on numerous committees and boards.

> **MOTION**: to adjourn Jones/Kephart. PASSED Unanimously.

The 2012 Board of Directors convened immediately following to install officers, approve program board appointments and determine their 2012 meeting schedule.

Steve Harris, Area 4 Director and Brian McCarthy, Area 9 Director were welcomed by their colleagues to the 2012 SCCA, Inc. Board of Directors.

Election of officers followed with the results as follows: Chairman, Wannarka; Vice Chairman, Noble; Treasurer, Lewis; Vice Treasurer, Walsh and Secretary, Butler. Jones was added as the 5th member to the Executive Committee.

The following program board appointments were approved.

Club Racing Board
Chairman, Jim Wheeler; Members: Jim Drago, Chris Albin, Mirl Swan, Tom Start, Peter Keane and Fred Clark

Executive Stewards
Central, Joanne Jensen; Great Lakes, Jim Green; Midwest, Ken Patterson; NorPac, Gary Meeker; NE, Earl Hurlbut; RM Gloria Dickerson; Southeast, Bob Horansky; SoPac, Barbara Knox; SW, Tom Brown.

Time Trials Advisory Committee
Chair, Tony Machi; Members: Jerry Cabe, Chuck DePro, Dave DeBorde, Matt Rowe, Josh Hadler, Joe Olivera, Roy Mallory, Dr. Kent Carter.

Court of Appeals
Chair, Mike West; Tom Hoffman, Jack Marr, Rick Mitchell, Jeff Niess and Sue Roethel as secretary.

Solo Events Board
Chair, Steve Hudson; Bryan Nemy, Mike Simanyi, Richard Holden, Dave Hardy, Dave Feighner, Erik Strelnieks

Divisional Solo Stewards
Todd Farris, SW; Robert Lewis, SE; Steve Garnjobst, Central ; Tom Berry, SoPac; Keith Brown, NorPac; David Newman, NE; Lindsay Wilson, RM; Donna Hill, MW; Scott Hearne, GL.

Solo Safety Committee
Chair, Kathy Barnes; John Lieberman, SW; Arouch Poonsapaya, Central; Brian Robertson, SoPac; Cal Craner, RM; Jan Rick, MW; Bruce Bellom, NE.

RoadRally Board
Chair, James Wakemen, Jr.; Rich Bireta; Jeanne English, Sasha Lanz, Eva Ames, Clarence Westberg, Charles Hanson

Divisional RoadRally Stewards
Bob Ricker, SE; Larry Scholnick, SoPac; Mike Bennett, GL; Mike Thompson, Central; Steve McKelvie, NE; Rich Bireta, MW; Lindsay Wilson, RM; Sasha Lanz, SW.

RallyCross Board
Chair, Ken Cashion; Ron Foley, Brent Blakely, Karl Sealander; Warren Elliott, Stephen Hyatt, Bob Ricker.

Divisional RallyCross Stewards
Richard Miller, SW; Z.B. Lorenc, GL; Brent Carlson, Central; Jerry Doctor, MW; Scott Beliveau, NE; Paul Eklund, NorPac; Aaron Miller, RM; Charles Wright, SE; Jayson Woodruff, SoPac.

Meeting dates approved for 2012
February 29-March 3
May dates to be determine at a later time
August 6 Conference Call
October 11-13
November 29-December 1

CLUB RACING BOARD

CLUB RACING BOARD MINUTES | December 6, 2011

The Club Racing Board met by teleconference on December 6, 2011. Participating were Bob Dowie, Chairman; Chris Albin, Fred Clark, Jim Drago, Dave Gomberg, Tom Start, and Jim Wheeler. Also participating were Marcus Meredith and Richard Patulo, BoD liaisons; Doug Gill, General Manager, Technical Services Department; John Bauer, Technical Services Manager Club Racing; Ryan Miles, Technical Coordinator Club Racing; Peter Keane and Mirl Swan, 2012 CRB members; Pam Richardson, 2012 CRB Secretary. In addition to those items covered in Technical Bulletin 11-12, the following decisions were made:

SUGGESTED RULES FOR NEXT YEAR

The following subjects will be referred to the Board of Directors for approval. Address all comments, both for and against, to the Club Racing Board. It is the BoD's policy to withhold voting on a rules change until there has been input from the membership on the presented rules. Member input is suggested and encouraged.
Please send your comments via the form at http://www.crbscca.com/

GCR

1. #6539 (R J Gordy) Helmet Cameras
   In 9.3.12, delete the last sentence: "~~Helmet mounted cameras are prohibited regardless of size, weight, or location of camera on the helmet.~~" [This would permit helmet mounted cameras if judged safely mounted by scrutineers.]

SUPER TOURING

STO

1. #6665 (David Pintaric) Wheel Size Options Viper ACR-X
   In 9.1.4.1, STO, permit stock, factory OEM wheels on Dodge Vipers.

PRODUCTION

1. #6467 (Ted Heinritz) fitting alternate gearbox
   In 9.1.5.E.1.n.4 and 9.1.5.E.2.n.4, change as follows: "*For rear wheel drive cars,* ~~T~~*t*he transmission tunnel and tunnel cover can be altered to allow the installation of an alternate **transmission** and/or **drive shaft**. For front wheel drive cars, the **body**, **unibody**, **frame**, **suspension** crossmembers/subframes and their components may be altered to the extent required to allow the installation of an alternate **transmission**, **transaxle** and /or **drive shaft**.*"

HP

1. #6570 (Curtis Wood) 7" wheel width request for Hprod Alfa Romeo
   In 9.1.5, HP, Alfa Romeo Giulietta Sprint & Spider, 750 & 101, Normale (Spider) & Veloce (Super Spider), change track to *55.6 front and 54.6 rear* and wheel size to *15x7*.

2. #6778 (CRB) Corolla brakes
   In 9.1.5, HP, Toyota Corolla (71-74), add to Brakes Alt.: mm/(in.): "*(F) 10.0 Solid Disc Rotors and Calipers from 73 Corona*".

SPEC MIATA

1. #6861 (CRB) Undercoating removal
   In 9.1.8.C.8.e, change as follows: "Carpets, center consoles, cargo bins, seat belts, floor mat, firewall insulation/blanket, *sound deadener patches, undercoating,* radio system, headliners, dome lights, grab handles, sun visors and their insulating and attaching materials may be removed. Other than to provide for the installation of required safety equipment or other authorized modifications, no other driver/passenger compartment alterations or gutting are permitted."

TOURING

T1

1. #6552 (Rob May) Allow T1 05-07 Porsche 911 carrera S same specs as 996 in T2
   In 9.1.10, T1, Porsche 911 Carrera S (05-07), add to Notes: "*Transmission coolers are free. Ducting for coolers is free, provided it doesn't change size and/or shape of factory body panels. Spring rates are free. Sway bar size & configuration is free. Removal of rotor dust shields is allowed. Spoilers & bumper/airdams are free provided they do not exceed the max. body width by any amount and/or the max. body length by more than 1". Rear wings may be no higher, relative to the roofline, than a factory, non-extended, 3.8 RSR wing. Camber adjustment slots may be elongated. Porsche Motorsport rear control arms allowed.*" [These are the same allowances as the T2 Porsche 911 / 996 (98-05).]

T2

1. #6644 (Cheyne Daggett) Adjustments to the classification in T2 from T3
   In 9.1.10, T2, Ford Mustang V6 2011-2012, change as follows: Max Wheel Size: from ~~18 x 8 (F&R)~~ to *18 x 10 (F&R)*, Tire Size: from ~~245 (max) (F&R)~~ to *295/35 (max) (F&R)*, Final Drive: from ~~3.31~~ to *3.55*. Add to Notes: "*Ford Spring Kit - M-5300-A (M-5310-A Front, M-5560-A Rear) permitted.*"

T3

1. #6500 (Jim Leithauser) Competition adjustment
   In 9.1.10, T3, BMW Z4 3.0si Coupe (07-08), change weight from ~~3500~~ to *3400* and add to Notes: "*May use H&R springs: front RF160090, rear RF160100; rear spring height adjusters: Turner #HR92-K-X-011A01; H&R sway bar kits: front 70276 27mm, rear 71276 21mm, at 3500 lbs.*"

2. #6563 (David Mead) Request alternate springs T3 Mustang
   In 9.1.10, T3, Ford Mustang GT (01-04) incl. Bullitt (2001), add to Notes: "*H&R Race Springs (79-04 Mustangs) part #47200, includes 750-850 (progressive), 260-280 (progressive, solid axle) permitted at 3400 lbs and tire size 245.*"

CAR RECLASSIFICATIONS

None

WHAT DO YOU THINK?

None

MEMBER ADVISORIES

F600

The BoD did not approve a re-write of the rules for the regional F600 class. The new rule set would have changed the class from its original structure, which was seen as an alternative power train for the F500 class. The BoD feels that there is not enough differentiation between existing classes and the proposed new class.

The BoD did recognize that the F600 power train may be a viable alternative for F500 sometime in the future. If F600s are built and raced in sufficient numbers, with F500 style chassis only modified with a longer wheelbase to accept the F600 drive train, and it is demonstrated that their performance can be adjusted on a par with the F500 cars, a future merger of the classes may be possible. The CRB plans to submit to a rule set to the BoD for an F600 regional class that is close to the existing F500 rule set.

FC, FF, FV, FST

To help simplify the homologation process for competitors, encourage participation, and be consistent with the system implemented for CSR and DSR homologations, effective 1/1/12 the following procedures will be added:

- Any approved Formula Continental homologation will automatically receive a Formula Ford homologation, and vice versa.
- Any approved Formula Vee homologation will automatically receive a Formula First homologation, and vice versa.

Existing homologation certificates may be updated with the additional class for a $25 processing and shipping fee. Contact Ryan Miles at rmiles@scca.com.

NOT APPROVED BY THE CRB

GCR

1. #6646 (Darwin Felix) Make the full CRB Submission Letter public on CRB website
   The CRB does not consider this appropriate because details of communications by members is considered private.

FORMULA

FC

1. #6509 (Nathan Ulrich) Clarification of front impact attenuation rules
   The Formula and Sports Racing advisory committee considered your suggested wording changes and does not see these clarifications as necessary.

FF

1. #6370 (CRB) Allow alternative/open clutch for Fit engine
   At this time, the reported number of failures is minimal and does not indicate a need for an alternate clutch. We will reconsider this proposal in the future if the reported failure rate increases. Thank you for your input and please help keep us informed of the known failures.

GRAND TOURING

GT3

1. #6349 (Michael Cyphert) Make alt. spec. for Nissan 2.4 3-valve engine permanent.
   The Nissan KA24 3V competitors have had adequate time to convert to an SIR. The SIR will be required as of 1/1/2013.

2. #6385 (Bob Coffin) Reduce Corvair weight to correct 2225 lbs
   The engine displacement of this car is among the largest in class. In the GT3 restructuring, this classification was given a choke restriction rather than SIR because of manifold difficulties. The weight differential compared to cars using SIRs is

correct.

3. #6387 (Bob Coffin) Add Zenith 3bbl carbs to spec line
   There is no demonstrated need for additional carburetor types. The performance potential of the requested carburetor is unknown.

GTL

1. #6430 (Bob Coffin) Add 18RG engine to GTL Toyota engine list
   The requested engine was not available in any car sold in the USA.

SUPER TOURING

STU

1. #6579 (Marty Grand) STU, do not make blanket policy..treat every car Individually
   Thank you for your input. The chart for weights for STU cars is adequate for classification.

2. #6307 (Michael Pettiford) Allow the Solstice a Bigger Turbo Charger
   STO may permit upgraded turbos upon request.

3. #6580 (Marty Grand) add weight to the Gulf BMW M3
   We will continue to monitor the performance of this car.

4. #6612 (Peter Lier) STU Allow Alt heads
   Thank you for your input. Alternate heads are not within the class philosophy.

PRODUCTION

EP

1. #6564 (Steve Hickham) equal weight to H.P. ratio
   Competition adjustments were just made to cars in this class and the performance of those cars and other cars in class will continue to be monitored.

2. #6711 (Charles Coker) Allow Alternate Calipers for Porsche 356
   Normally alternate calipers are allowed only if the stock calipers are no longer available or if the design is so unusual that brake pads are not reasonably available (including by reworking a pad made for another caliper).

FP

1. #6653 (Gary Johnson) alternate carbs. Prep level 2 Jensen Healey in FP
   The competitor is encouraged to campaign this car so the advisory committee can continue to monitor its performance.

HP

1. #6604 (Andrew Wright) optional carburetion HP Lotus 7
   The manifold in question is reasonably available.

AMERICAN SEDAN

1. #6517 (Edward Hosni) Rules rewrite 9c.: Headlight removal covers
   Thank you for your input. The rule is sufficient as written.

SHOWROOM STOCK

SSC

1. #6447 (Jim Ebben) Reduce the weight of the Ford Focus SVT by 100 pounds.
   This car is competitive as classed.

2. #6671 (Mark McCaughey) Restore process weight to Toyota Celica GTS
   Thank you for your input. This car is competitive as classed.

3. #6672 (Mark McCaughey) Remove 50lbs from Celica GT
   This car is classified properly.

4. #6674 (Mark McCaughey) Revise weight 00-05 Eclipse GT
   This car is classified properly.

5. #6676 (Thomas McCaughey) Mazda MX-5 weight
   Classification of vehicles in SSC is not based directly on SSB specifications.

SPEC MIATA

1. #6635 (Harry Manning) Engine head to be decked/milled to achieve the factory CR
   The rule is fine as written. Thank you for your repeated input.

SPORTS RACING

CSR

1. #6538 (Carl Liebich) 2nd look at raising 2cycle displacement
   Although Jason Miller's performance at the Runoffs was competitive it was not indicative of an "overdog" and the Formula and Sports Racing advisory committee considers the approved increase to be warranted. The 2 cycle performance will be monitored and if an "overdog" has been created it will be addressed. Thank you for your input and please help us watch the performance in the future.

TOURING

T1

1. #6645 (Cheyne Daggett) Add the 2011/12 Mustang V6 to the Spec Line
   Existing dual class choices for this car are sufficient.

2. #6682 (Marty Grand) Dual class the Evo in T1 form to go along with current T2 form
   Not within class philosophy.

3. #6708 (Adam Vanda) Add Headers to exhaust system. C6 LS2
   The T1 class is being reviewed.

T2

1. #6697 (Marty Grand) Wheel size EVO
   This car is competitive as classified.

2. #6698 (Marty Grand) T2 Brakes EVO
   This car is competitive as classified.

T3

1. #6457 (Cheyne Daggett) Replacement Front Control Arm Bushings
   Not within class philosophy.

2. #6458 (Cheyne Daggett) Reduce Weight V6 MUSTANG
   This car is *well* under process weight.

3. #6680 (Chad Gilsinger) Move 2010-2012 Acura TL SH-AWD from T2 to T3
   This car has too much performance potential for T3.

PREVIOUSLY ADDRESSED

None

NO ACTION REQUIRED

GCR

1. #5661/#5662/#5705 (Carla Heath/Lorrie Gaunt-Wandell/JoAnne Jensen) John McGill Award nomination
   Thank you for your nominations.

2. #6462 (JoAnne Jensen) Candidate for Jim Fitzgerald Rookie of the Year
   Thank you for your nomination.

3. #6760 (Jeff Jorgenson) New submission page is a bad idea
   The current letter submission system has been in place for two years. Prior to its creation, member emails were copied and converted to PDF format and sent to each member of the CRB and the various advisory committees; agendas were generated by a staff member. The next system was one of private forums into which the emails were entered; agendas were still generated by a staff member. The current letter submission system is handled with a minimum of staff intervention and automatic tracking emails are sent to the submitter to inform of its current place in the system. This system has increased overall productivity of the advisory committees and the CRB. Unlike the previous systems, letters are almost never "lost" through clerical error. All letters are archived for future reference.

   Creating a submission with the letter system takes little or no more effort than sending an email. Yours is the first complaint we have had about this system in the two years it has been in use.

GRAND TOURING

GT2

1. #6445 (Rick Henschel) Verify the specs for the Porsche Cup cars
   All requested specifications are listed in the factory Porsche GT3 Cup parts/Service manual or on car's spec line.
   - gear sets allowed? Per spec line Notes.
   - overbore allowed? No
   - allowed stroke? Per spec line
   - allowed tire, brand, size? Free; Free; Per spec line
   - ride height? Per Factory Porsche GT3 Cup parts/Service Manual.
   - body mods, if any? Per spec line
   - brake mods? None, except brake pads are free; see spec line

SUPER TOURING

STU

1. #6615 (Dale Shoemaker) Turbo for STU Miata
   Exhaust manifolds are open.

STL

1. #6609 (David Mead) STL needs National status
   Thank you for your support. This has been approved.

2. #6815 (Gregg Ginsberg) Do not give STL National status *yet*
   Thank you for your input.

PRODUCTION

1. #6257 (Jim Creighton) Flares vs. spoilers; splitters
   The rule is clear as written.

2. #6441 (Jim Creighton) Clarify Items from the 2011 Runoffs
   These items were addressed in the December Fastrack and have been approved by the BoD.

EP

1. #6684 (Guy Marvin) Classification Nissan Z Cars
   Classification of cars in production is not based on serial numbers. If the same chassis came with engines of different displacements then, if both engines are classed, they can be run in the shared chassis. For these two cars no years are listed in the spec lines.

FP

1. #6713 (Charles Coker) Allow the Porsche 356 to use a Twin Plug Ignition System
   If the twin plug head was available on the base model of this car, it may be used. if not, this request is contrary to class philosophy.

AMERICAN SEDAN

1. #6207 (Scott Sanda) Clutch and Flywheel
   Thank you for your input. Clutch and flywheel options will be part of the discussion for incorporating a complete set of Limited Preparation rules within the American Sedan rules for 2013.

SHOWROOM STOCK

SSC

1. #6595 (Tom McCaughey) SSC Toyota Celica GTS information
   Thank you for your input.

2. #6675 (Thomas McCaughey) Reclassify to SSC (miata)
   See letter #6744 in Technical Bulletin 12-01.

TOURING

T1

1. #6642 (Jason Berkeley) Do Not Proceed with Restrictors for C6 LS3
   Thank you for your input.

2. #6643 (William Brinkop) Proposed allowance of polyurethane or delrin bushing
   Thank you for your support.

3. #6651 (Rob Bodle) Non-Seam welded FR500C
   The engine in this car is not classified in T1. See letter #6562 in Technical Bulletin 12-01 for STO classification.

4. #6696 (Jason Berkeley) Additional Info (Video) Supporting No Restrictor Plate for C6 LS3
   Thank you for the data.

T3

1. #6471 (Rob Piekarczyk Piekarczyk) Reclassify 2005 - 1010 Mustang GT
   See letter #6470.

2. #6557 (Carolyn Kujala) moving of T3 cars into different classes
   Thank you for your input. Please submit specific recommendations any for reclassification.

RESUMES

None.

CLUB RACING TECHNICAL BULLETIN

DATE: December 20, 2011
NUMBER: TB 12-01
FROM: Club Racing Board
TO: Competitors, Stewards, and Scrutineers
SUBJECT: Errors and Omissions, Competition Adjustments, Clarifications, and Classifications

All changes are effective 1/1/12 unless otherwise noted.

GCR
None.

Formula
FA
1. #6381 (Kevin Kloepfer) FA Wing Manufacturer allowance
   In 9.1.1.A, Table 2, Swift 016, Notes, change the wing requirements as follows: "Wings: The wings and end plates may not be changed. ~~The wings must have a Swift label visible on each wing showing the following part numbers: front wing (part no. 01612-0010), front flaps (part no. 01612-1021LorR), lower element, rear wing (part no. 01613-0010), and upper element, rear wing (part no. 01613-0013).~~ All wings must conform to the wing angles and dimensions specified in the Appendix A illustrations provided by Swift Engineering. *Wings and endplates may be exact copies of the original Swift components. Contact the SCCA Technical Services department for copies of the wing profiles and end plate templates.*"

Grand Touring
GT2
#5743 (Ken Muth) Weight for vg 33 Engine - classify VG33 2v
In 9.1.2, GT2, Nissan engines, add:

Engine Family	Engine Type	Bore x Stroke (mm)	Disp. (cc)	Head Type	Valves / Cyl.	Fuel Induction	Weight (lbs)	Notes
VG33	*SOHC*	*81.5 x 83.0*	*3275*	*Alum, Crossflow*	*2*	*40mm chokes or 37mm SIR*	*2230*	

Improved Touring
None.

Super Touring
ST
1. #5943 (CRB) Strike Jetta TDI Cup
   In 9.1.4.B, delete, "~~• Cars eligible for the SCCA Pro Racing VW TDI Cup series using the current Pro Racing Rules may run in STU, except that any DOT tire is permitted and a head and neck restraint is optional until 2012. Competitors must have a copy of the current rules in their possession.~~" [These cars are unavailable.]

2. #6681 (CRB) Rules Verbiage Clarification - Transmissions
   In 9.1.4.M.3, delete "~~Cars with aftermarket sequential shift transmissions shall increase the required minimum weight by 100 lbs.~~"

   In 9.1.4.1.F.2, change as follows: "Transmissions and ratios are free. Forward gears are limited to six speeds. *Cars with aftermarket sequential shift transmissions shall increase the required minimum weight by 100 lbs.*"

   9.1.4.2.E.3, change as follows: "Transmissions and ratios are free. Forward gears are limited to six speeds. *Cars with aftermarket sequential shift transmissions shall increase the required minimum weight by 100 lbs.*"

STO
1. #6348 (CRB) Clarify GM and Dodge Viper engine classifications.
   In 9.1.4.1.J, delete all current GM and Dodge Viper car spec lines and replace with the single entries below. There were inconsistencies in the way a single engine was treated in different chassis. Any listed chassis may run with any listed engine, subject to intake restrictions and the notes for each engine or chassis.

Cadillac CTS/CTS-V Chevrolet Camaro Chevrolet Corvette Pontiac Fiero Pontiac Firebird Pontiac GTO Pontiac Solstice	*1998*	*3000*		*GM Ecotec LNF. Alternate Turbo permitted.*
	~~5000~~ *4999*	2500		*GM V-8 engines with OEM specs 3.735" bore x 3.4803" stroke.*
	5733	*2950*		*GM V-8 engines with OEM specs 4.00" bore x 3.75" stroke; e.g., LT1, LT4, L98, etc*
	~~383 ci~~ *6178*	3150		GM LT1/LT4/L98 (only), *with alternate 3.75" stroke crankshaft. Max stroke 3.75", max bore 4.04".*
	~~5700~~ *5665*	*2950*		GM *LS1,* LS6
	~~6000~~ *5967*	3240		*GM LS2. May use the LSX cast iron block with OEM LS2 bore and stroke.*
	~~6200~~ *6162*	3110		Stock OEM LS3. Maximum camshaft lift: intake 8.24 mm, exhaust 7.77mm; rocker arm ratio 1.70:1; maximum compression ratio 10.7:1; cylinder heads must be as delivered from the factory.
	~~6200~~ *6162*	3350		GM LS3
	~~7000~~ *7011*	3300	75mm flat plate or 45mm SIR	*GM LS7*
	~~7000~~ *7011*	3500	80mm flat plate	GM LS7
				Chassis-specific notes: Camaro/Firebird: Aftermarket K members are permitted. Corvette: The top 12 inches of the firewall must be covered with metal or reflective heat shielding material. The OE firewall may ~~also~~ be replaced with a metal ~~piece~~ *panel* running between the A-pillars.

Dodge Viper, incl Comp Coupe, ACR/ ACR-X	*7990*	*3300*	*(2) 65mm flat plates*	
	8000	*3300*	*(2) 65mm flat plates*	
	8300	3300	(2) 55mm flat plates	
	8400	3400	(2) 55mm flat plates	
	8400	3400	(2) 60mm flat plates	Stock OEM engine. Engine long block, valve train, and intake system must meet stock, shop manual specifications.
				Chassis-specific Notes: *OEM fuel tank may be used.*

2. #6562/#6719 (David Mead/Mike Canney) 5.0 coyote engine in Mustang
   In 9.1.4.1.J, add the following:
   /Ford 5.0L "Cammer" engine/5000/3000///

   /Ford 5.0L "Coyote" engine/5000/3000//"Boss" intake manifold required

3. #6678 (David Mead) classify Mustang 4.0 V6 (max) w S/C
   In 9.1.4.1.J, add the following: */Ford 4.0L V6/4000/2800//Rotrex C38-81 supercharger permitted./*

STU

1. #6816 (Greg Amy) Modify compression ratio language to accommodate diesel engines.
   In 9.1.4.2.D.4, change as follows: "Compression ratio *on spark-ignition engines* is limited to 12.0:1. *Compression ratio on compression-ignition engines is unrestricted.*" [This accommodates diesel engines.]

2. #6837 (Peter Keane) Allow Turbo CLK Mercedes
   In 9.1.4.2.I, table A, add the following: */Mercedes CLK/2300/3200//Precision turbo model 5557 allowed with 37mm TIR restrictor. Engines are permitted 0.040 overbore, 0.5 point increase in compression. Engines must use the OEM camshaft lift./*

STL

1. #6700 (Greg Amy) Clarify APR GTC-200 Wing Allowance
   In 9.1.4.2.B.2.f and 9.1.4.3.B.2.f, clarify as follows:"APR *P*~~p~~erformance ~~wing~~ GTC-200 *"SCCA Spec" wing*, part #AS-104801, variable cord length (8.75" Inner/6.75" Outer), *48" span, 9.5" long end plates,* is permitted. *Wing must comply with class maximum assembly width regulations.*"

Production

EP

1. #6591 (Jason Isley) Class B15 (02'-06') Sentra in EP
   In 9.1.5, EP, add the following:

EP	Prep. Level	Weight (lbs.)	Engine Type	Bore x Sroke mm.(in.)	Displ. cc./(ci)	Block Mat'l	Head/PN & Mat'l	Valves IN & EX mm/(in.)	Carb. No. & Type	Wheelbase mm/(in.)	Track (F/R) mm/(in.)
Nissan Sentra SER Spec V (2002-2006)	*2*	*2400 * 2460 ** 2520*	*4 Cyl. DOHC*	*80 x 100*	*2488*	*Iron*	*Alum*	*(I) 35.8 (E) 30.8*	*Fuel injection*	*2535/99.8*	*61.9 / 61.2*

EP	Wheels (max)	Trans. Speeds	Brakes Std. (mm/(in.))	Brakes Alt.: mm/(in.)	Notes:
Nissan Sentra SER Spec V (2002-2006)	*18 x 8*	*6*	*(F) 305 (R) 278*		*Comp. Ratio limited to 10.0:1, Valve lift limited to .500".*

2. #6606 (Kevin Ruck) Remove OEM spoiler ban
   In 9.1.5, EP, Honda S2000 (00-03), Honda Prelude Si and Mazda RX-7 (13B) (86-91), Notes, delete "~~OEM or aftermarket rear spoiler not permitted.~~" [Spoilers are permitted as long as they came on the base model of any classified car or are listed on the car's spec line.]

3. #6608 (Kevin Ruck) Classify the 04-08 Acura TSX in EP
   In 9.1.5, EP, add the following:

EP	Prep. Level	Weight (lbs.)	Engine Type	Bore x Sroke mm.(in.)	Displ. cc./(ci)	Block Mat'l	Head/PN & Mat'l	Valves IN & EX mm/(in.)	Carb. No. & Type	Wheelbase mm/(in.)	Track (F/R) mm/(in.)
Acura TSX (2004-2008)	*2*	*2450 * 2511 ** 2573*	*4 Cyl. DOHC*	*87 x 99*	*2354*	*Alum*	*Alum*	*(I) 36.0 (E) 30.0*	*Fuel injection*	*2670/105.1*	*63.9 / 63.9*

EP	Wheels (max)	Trans. Speeds	Brakes Std. (mm/(in.))	Brakes Alt.: mm/(in.)	Notes:
Acura TSX (2004-2008	*18 x 8*	*6*	*(F) 300 vented (R) 260 solid*		*Comp. Ratio limited to 12.0:1, Valve lift limited to .500".*

FP

1. #6710 (Charles Coker) Reduce Weight for the Porsche 356 by 200 lbs
   In 9.1.5, FP, Porsche 356, A, C (1500, 1600)C (1600) SC,B, Super 90 Cabriolet, change weight from ~~1920~~ to *1840*.

   In 9.1.5, FP, Porsche 912 Coupe / Targa (-1969), change weight from ~~1950~~ to *1870*.

HP

1. #6494 (Les Chaney) Classify Volvo 142 in HP.
   In 9.1.5, HP, add the following:

HP	Prep. Level	Weight (lbs.)	Engine Type	Bore x Sroke mm.(in.)	Displ. cc./(ci)	Block Mat'l	Head/PN & Mat'l	Valves IN & EX mm/(in.)	Carb. No. & Type	Wheelbase mm/(in.)	Track (F/R) mm/(in.)
Volvo 142/142E P-1800 engine	*2*	*2150 * 2204 ** 2258*	*4 Cyl. OHV*	*3.31 x 3.15*	*1780*	*Iron*	*Iron*	*(I) 1.57 (E) 1.38*	*(2) 1.75" SU, (2)1.75 CDSE Stromberg, (2) 1.75" SU HS6 or fuel injection*	*2616 (103.0)*	*1415/1415 (55.7/55.7)*

HP	Wheels (max)	Trans. Speeds	Brakes Std. (mm/(in.))	Brakes Alt.: mm/(in.)	Notes:
Volvo 142/142E	*15 x 7*	*5*	*(F) 272 (10.7) Disc (R) 295 (11.6) Disc*		

2. #6605 (Andrew Wright) reduce weight of HP Lotus 7
   In 9.1.5, HP, Lotus 7 & 7 America, change weight from ~~1450~~ to *1400*.

3. #6718 (Curtis Wood) Error and Comment on new MINI classification just announced
   In 9.1.5, Mini Cooper (07-11), correct Transmission Speeds from ~~5~~ to *6*.

American Sedan

1. #6230/#6511 (David Venhaus/Eric Ritchie) AS weight reduction proposal and related items
The ASAC has made adjustments to *all* American Sedan cars to be effective 1/1/2012. With the subject changes, the Edelbrock aluminum head 313 CID (or less) engine becomes the base engine for all full preparation cars. Iron head engines will have a 150 lb reduced weight in order to maintain existing parity between aluminum and iron head engine cars. Cars wishing to run dog ring transmissions will require a 125 weight penalty, as now stated in 9.1.6.D.3.k. With this rule change, limited/restricted preparation cars have a 130 lb weight reduction, whereas full preparation car reduction is 80 lbs. Finally, the penalty for limited/restricted preparation cars going from 275 tires to 295 tires has been reduced from 100 lbs. to 50 lbs. Individual adjustments are shown below.

Cadillac CTS-V (04-05) Restricted Preparation, 275 tire, change weight from ~~3600~~ to *3470*; 295 tire, change weight from 3700 to *3520*

Cadillac CTS-V (06-07) Restricted Preparation, 275 tire, change weight from ~~3650~~ to *3520*; 295 tire, change weight from 3750 to *3570*

Chevrolet/Pontiac Camaro and Firebird (82-92), change weight from ~~3230~~ to *3300*, over 313 CID, change weight from ~~3530~~ to *3600*. Change Notes: Head Casting #s: 14101081, 14014416 Port Volume (Max.): 081 casting: 170.00 cc IN/65.00 EX; 416 Casting 168.00cc IN/60.00 EX *with a 150 lb weight reduction.* Edelbrock Cylinder Head Part #s 608979, 608879 ~~may be used with a 150 lb. weight penalty~~ *are permitted.*

Chevrolet/Pontiac Camaro and Firebird (93-02), change weight from ~~3230~~ to *3300*, over 313 CID, change weight from ~~3530~~ to *3600*. Change Notes: Head Casting #s: 14101081, 14014416 Port Volume (Max.): 081 casting: 170.00 cc IN/65.00 EX; 416 Casting 168.00cc IN/60.00 EX *with a 150 lb weight reduction.* Edelbrock Cylinder Head Part #s 608979, 608879 ~~may be used with a 150 lb. weight penalty~~ *are permitted.*

Chevrolet/Pontiac Camaro and Firebird (93-97) Restricted Preparation, change weight from ~~3330~~ to *3200*

Chevrolet/Pontiac Camaro and Firebird (98-02) Restricted Preparation, change weight from ~~3430~~ to *3300*

Ford Mustang Including Cobra and Cobra R (79-93), change weight from ~~3030~~ to *3100*, over 313 CID, change weight from ~~3330~~ to *3400*. Change Notes: Head Casting #s: F3ZE AA (GT40), F1ZE-AA (GT-40), F77E-AA (GT-40P), Port Volume (Max.): 143.00cc IN/54.00cc EX (GT-40 & GT-40P) *with a 150 lb weight reduction.* Edelbrock Cylinder Head Part #s 602579, 602479 ~~may be used with a 150 lb. weight penalty~~ *are permitted*.

Ford Mustang Including Cobra thru 95 (94-98), change weight from ~~3230~~ to *3300*, over 313 CID, change weight from ~~3530~~ to *3600*. Change Notes: Head Casting #s: F3ZE-AA (GT40), F1ZE-AA (GT-40), F77E-AA (GT-40P), Port Volume (Max.): 143.00cc IN/54.00cc EX (GT-40 & GT-40P) *with a 150 lb weight reduction.* Edelbrock Cylinder Head Part #s 602579, 602479 ~~may be used with a 150 lb. weight penalty~~ *are permitted*.

Ford Mustang Cobra (94-95) Restricted Preparation, change weight from ~~3430~~ to *3300*

Ford Mustang Cobra R (1995) Restricted Preparation, change weight from ~~3530~~ to *3400*

Ford Mustang Cobra (96-98) Restricted Preparation, change weight from ~~3380~~ to *3250*

Ford Mustang Cobra (99-02) Restricted Preparation, change weight from ~~3530~~ to *3400*

Ford Mustang Including Cobra (99-04), change weight from ~~3230~~ to *3300*, over 313 CID, change weight from ~~3530~~ to *3600*. Change Notes: Head Casting #s: F3ZE-AA (GT40), F1ZE-AA (GT-40), F77E-AA (GT-40P), Port Volume (Max.): 143.00cc IN/54.00cc EX (GT-40 & GT-40P) *with a 150 lb weight reduction.* Edelbrock Cylinder Head Part #s 602579, 602479 ~~may be used with a 150 lb. weight penalty~~ *are permitted*.

Ford Mustang Mach 1 (03-04) Restricted Preparation, change weight from ~~3380~~ to *3250*

Ford Mustang GT (05-09), change weight from ~~3230~~ to *3300*, over 313 CID, change weight from ~~3530~~ to *3600*. Change Notes: Head Casting #s: F3ZE-AA (GT40), F1ZE AA (GT-40), F77E-AA (GT-40P), Port Volume (Max.): 143.00cc IN/54.00cc EX (GT-40 & GT-40P) *with a 150 lb weight reduction.* Edelbrock Cylinder Head Part #s 602579, 602479 ~~may be used with a 150 lb. weight penalty~~ *are permitted*.

Ford Mustang Coupe GT (05-09) Restricted Preparation, change weight from ~~3380~~ to *3250*

Mercury Capri (79-86), change weight from ~~3030~~ to *3100*, over 313 CID, change weight from ~~3330~~ to *3400*.Change Notes: Head Casting #s: F3ZE-AA (GT40), F1ZE-AA (GT 40), F77E-AA (GT-40P), Port Volume (Max.): 143.00cc IN/54.00cc EX

(GT-40 & GT 40P) *with a 150 lb weight reduction.* Edelbrock Cylinder Head Part #s 602579, 602479 ~~may be used with a 150 lb. weight penalty~~ *are permitted*.

Pontiac GTO (04-06) Restricted Preparation, LS1 engine, change weight from ~~3430~~ to *3300*, LS2 engine, change weight from ~~3480~~ to *3350*

2. #6516 (Edward Hosni) Rules rewrite 7.b regarding bumper covers and bars
   Clarify 9.1.6.D.7.b as follows: "Unless *authorized in these rules or* stated in a spec line, all bumper covers, bumper absorbing material, and metal bumper bars shall not be modified or removed."

3. #6828 (Pam Richardson) Clarify 9.1.6.D.1 sections
   The following changes to 9.1.6.D.1 are to make clear which modifications apply to full preparation and limited preparation cars.

   9.1.6.D.1.b: Any fuel pump(s), fuel pressure regulators, or filters may be used and may be relocated, but shall not be located in the driver/passenger compartment. If a mechanical pump is ~~replaced~~ *removed*, a blanking plate may be used to cover the original mounting location. Fuel line(s) may be replaced, relocated, and given additional protection. If the relocated line(s) passes through the driver/passenger compartment, it/they shall be metal or metal braided, and shall be securely fastened. *(Applies also to Restricted Preparation cars with fuel cells)*

   9.1.6.D.1.d: Exhaust emission control air pumps, associated lines, nozzles, and other electrical/mechanical emission devices may be removed. If such items are not removed, they shall not be modified in any way. If EGR devices/nozzles are removed from a cylinder head or manifold, any holes remaining shall be completely plugged. *(Applies to all cars, Full and Restricted Preparation)*
   1. Catalytic converter(s) may be removed. *(Applies to all cars, Full and Restricted Preparation)*

   9.1.6.D.1.e.1: Exhaust shall exit behind the driver, and shall be directed away from the car body. A suitable exhaust muffling system may be necessary to meet sound control requirements. *(Applies to all cars, Full and Restricted Preparation)*

   9.1.6.D.1.f.3: Any *12 volt* battery may be used. The battery may be relocated as per GCR section 9.3 Batteries. Additional battery hold down devices may be used, and are strongly recommended. *(Applies to all cars, Full and Restricted Preparation)*

   9.1.6.D.1.h: Oil pans, pan baffles, scrapers, and windage trays, oil pickups, lines, and filters are unrestricted. *For Full Preparation cars, m*ain cap girdles may be fitted. A pressure accumulator/"Accusump" may be fitted. The location of the filter and accumulator are unrestricted, but they shall be securely mounted within the bodywork. All oil lines that pass into or through the driver/passenger compartment shall be metal or metal braided hose. Engine oil and oil additives are unrestricted. *(Except for main cap girdles as noted above, remainder of this rule applies to all cars, Full and Restricted Preparation)*

   9.1.6.D.1.i: Oil catch tanks are permitted. All engine breathers or vapor recirculation lines, if disconnected, shall vent to a catch tank of one (1) quart minimum capacity. Such catch tanks shall not be mounted in the driver/passenger compartment. *(Except for valve covers, as noted below, remainder of this rule applies to all cars, Full and Restricted Preparation)* Valve covers are unrestricted *on Full Preparation cars only*.

   9.1.6.D.1.o: Hardware items (nuts, bolts, etc.) may be replaced with similar items performing the same fastening function(s). Engine gaskets are unrestricted. ~~Engine drive belts and pulleys may be replaced with any non-tooth drive belt and appropriate pulleys. Power steering and alternator brackets may be modified or replaced with similar items performing the same mounting function.~~ Motor mounts are unrestricted. Engine must remain in the original, or approved location. This rule pertains to all cars, including restricted preparation.

   9.1.6.D.1.r: *For Full Preparation cars only,* any belt driven, mechanical power steering pump and any alternator may be used. They must mount to the front of the engine. Remote reservoirs may be added. *For Full and Restricted Preparation cars, engine drive belts and pulleys may be replaced with any non-tooth driven belt and appropriate pulleys for the purpose of component RPM reduction. For Full Preparation cars only, any power steering and/or alternator brackets may be used if they perform the same mounting function.*

Showroom Stock
SSC

1. #6744 (CRB) Remove the non-base model brake sizes from the MX-5.
   In SSC, Mazda MX-5 / Miata (01-05) Make the following changes to the brake column: ~~Suspension Package: (F) 269.5 Vented Disc (R) 267.9 Solid Disc~~

Spec Miata
None.

Sports Racing
SRF

1. #6522 (Mike Davies) SRF Wet tire part # update
   Effective 2/1/2012, change 91.9.C. Chassis Specifications, F as follows: "Tires: Dry: Goodyear Eagle "Spec Racer Ford"; size 22" x 7" x 13", Model D2525. Wet: Goodyear Eagle "Spec Racer Ford"; size 22" x 7" x 13", Model *D2626*. *Wet: Part number* D2524 *is permitted in Regional races only through the end of 2012.*"

Touring

1. #4862 (CRB) Touring tire rule clarification
   In 9.1.10.D.7.b, add to the end of the last paragraph: "*When a maximum tire size is listed on a vehicle's specification line, aspect ratio is open and any tire may be used that does not exceed the stated maximum section width.*"

T1

1. #6460 (Joe Aquilante) Add C6 Z06 To T-1 C6 spec line with engine change to LS3
   In 9.1.10, T1, add the following:

T1	Bore x Stroke (mm)/ Displ. (cc)	Wheel-base (mm)	Max Wheel Size (inch)	Tire Size	Gear Ratios	Final Drive	Brakes (mm)	Weight (lbs)	Notes:
Chevrolet Corvette Z06 (2006-2012)	*103.26 x 92.0 6162*	*2685*	*18 x 10 (F) 19 x 11 (R) or 18 x 11 (F) 19 x 13 (R)*	*315/35 max. (F&R) or 315/35 max (F) 345/35 max (R)* *Rear tires may protrude up to 1.0" with GM T1 Performance Suspension package.* *Max. camber: (F) -3.5 (R) -2.5 with GM T1 Performance Suspension package.*	*2.66, 1.78, 1.30, 1.00, 0.74, 0.50 or 2.97, 2.07, 1.43,.1.00, 0.71, 0.57*	*3.42*	*(F) 325 / 340 Vented Disc (R) 305 / 330 Vented Disc or (F) 355 x 32 Vented Disc (R) 340 x 26 Vented Disc or May use 2-pc steel rotors with alum. hats up to 5% larger than Z51 rotor.* ----------. *Any brake caliper pistons allowed. May use any four piston brake caliper and brackets with a 50 pound weight increase. Z06 brake calipers allowed.*	*3500*	*C6 T1 Suspension kit and Z51 option allowed. Floor may be modified to facilitate installation of cage mounting plates. The max. tire sizes supersede TCS 9.1.10.D.7.b. Removable roof panel shall be installed. The following parts are allowed: GM oil pan #12630477; GM radiator baffle # 25953429); fan shroud, Phoenix part # 1005422; Canton Accusump part # CA24006 or # CA24024, along with Electric solenoid W/ epc # CA24273, Accusump Check Valve # CA2428, and Wheel to Wheel Adapter block # 0760-50001, and related hoses and mounting brackets; 180 degree thermostat Hypertech # 1015; HD oil pressure shim Phoenix part # 1005421. Wrapping of tie-rod ends to shield heat is permitted. Trimming of the lower edge of the center of the air dam is allowed up to a depth of 3.9 cm. ARE dry sump system part #3021 S permitted; the following parts are included: mount w/tensioner and spacer #3020YM, serpentine belt #4032S, pulley #4SERP, oil tank #7030, tank bracket #7000, breather catch can # 7100, filter adapter #4010, damper assembly #8005. Aviaid Dry Sump System part number 008-10001 is permitted; the following parts are included: 3-stage pump 13111-1182, mounting hardware 40082 and 40018-83-1, HTD pump pulley 11649, HTD belt 46476, ATI damper assembly 917289, pan assembly 152-52504-10001, and tank assembly 110-50020-10001. The oil tank for either system shall be installed in the current battery location and the battery must be relocated to the same location as the 08 Corvette Z06; GM battery mounting bracket and hardware must be used. Alternate wheel bearings SKF Part # BAR 5049C permitted. Entire parking brake assembly (including interior lever) may be removed.*

T2

1. #6470 (Cheyne Daggett) Reclassify the 2005-10 Mustang GT 4.6L to T3
   In 9.1.10, T2, Ford Mustang Coupe GT & Shelby GT 4.6L (05-10), change weight from ~~3480~~ to *3380*. [This car has too much potential for T3.]

2. #6475 (Kevin Fandozzi) Cobalt SS Turbo T2 map sensor
   In 9.1.10, T2, add the following:

T2	Bore x Stroke (mm)/ Displ. (cc)	Wheel-base (mm)	Max Wheel Size (inch)	Tire Size	Gear Ratios	Final Drive	Brakes (mm)	Weight (lbs)	Notes:
Chevrolet Cobalt (05-07)	*86.0 x 86.1 1998*	*2629*	*18 X 9.5 (F&R)*	*255/50*	*3.38, 1.76, 1.18, 0.89, 0.71*	*4.05*	*(F) 296 Vented Disc (R) 270 Solid Disc*	*2850*	*The following GM parts are allowed: front springs part # CCS635, rear springs # CCS639, front control arms # CCS636 and CCS637, shrouding kit # CCS644. Griffin radiator # 9D-18194-01 allowed. Stage Two Supercharger kit, part #17803229 (includes Belt -#12597993 and Injector kit -#12597995) permitted. Optional rear sway bar max 42 mm (body and suspension mounting same as OEM). AEM cold-air intake (part# 21-532C) is permitted. Maximum spring rate 500 lbs/in (F), 700 lbs/in (R).*

3. #6501 (Michael Sullivan) Suggested Part # for cold air induction kit: T2 S2000
   In 9.1.10, T2, Honda S2000 (00-09) change weight from ~~2775~~ to *2725*. [Cold air box permitted. See December Fastrack. Approved by BoD.]

Spec MX-5
None.

CLUB RACING COURT OF APPEALS

JUDGMENT OF THE COURT OF APPEALS
David Dewhurst vs. COA Ref. No. 11-26-CN
November 17, 2011

FACTS IN BRIEF

Following the SMT race at *the Chicago Region "Fall Sprints"* at Blackhawk Farms Raceway on October 9, 2011, David Dewhurst (SMT #14) protested Keith Mellen (SMT #87) for violation of GCR 6.11.1. (On Course Driver Conduct). The protest arose from nose to tail body contact at the start of the race. Specifically, Mr. Dewhurst alleged that Mr. Mellen did not avoid contact between cars and did not maintain control of his car in close conditions. He further asserts that the officials erred when they failed to note vehicle damage in both competitor's vehicle logbooks, GCR 9.2.1.J.

The Stewards of the Meeting (SOM) Bev Heilicher, Hank Jaffe, Bill Schuberth and Dorn Lynch, Chairman, met, viewed an in-car video from car # 22 (Michael Kennedy), heard testimony, and disallowed the protest finding the contact to be a "racing incident".

Mr. Dewhurst appealed the SOM decision.

DATES OF THE COURT

The SCCA Court of Appeals (COA) Jack Hanifan, Jack Marr, and Michael West, Chairman, met on November 17, 2011 to hear, review, and render a decision on the appeal.

DOCUMENTS AND OTHER EVIDENCE RECEIVED AND REVIEWED

1. Appeal from David Dewhurst, received October 19, 2011.
2. Amended appeal from David Dewhurst, received October 24, 2011.
3. Official Observer's Report and related documents, received October 25, 2011.
4. In-car video from car # 22, received November 16, 2011.
5. Two E-mails from Dorn Lynch, SOM Chairman, received October 26, 2011 and November 16, 2011.

FINDINGS

At the beginning of the race, Mr. Dewhurst and Mr. Mellen were running at the rear of the pack when a car ahead of them spun at the start line resulting in an "accordion effect" back through the field. Mr. Dewhurst was forced to slow dramatically to avoid the spinning car and was struck from behind by Mr. Mellen.

In his appeal, Mr. Dewhurst asserts that Mr. Mullen failed to abide by GCR 6.11.1. and that the SOM's decision was incorrect. Mr. Dewhurst did not submit any new material, but simply asked the COA to reassess the evidence used by the SOM.

Following a review of the written and video evidence, the COA concluded the SOM's decision was correct. The contact between the cars was unavoidable. Therefore, the COA does not agree with the appellant's assertion that Mr. Mellen violated GCR 6.11.1. when he unavoidably struck Mr. Dewhurst's car at the start of the race.

Mr. Dewhurst also stated that Tech did not record the damage to his car in his Vehicle Logbook. (GCR 9.2.1.J.) The SOM provided testimony to the COA that they examined the cars at impound, saw body damage to both cars and stated: "Both continued after the impact and finished the race." They concluded the damage did not impugn the structural or safety integrity of either car and chose not to make a logbook notation. This judgment decision on the part of the SOM is not grounds to change their ruling on the contact between Mr. Mellen and Mr. Dewhurst.

DECISION

The Court of Appeals upholds the decision of the SOM. Mr. Dewhurst's appeal is considered well founded and his appeal fee, less the administrative amount retained by SCCA, shall be returned.

CLUB RACING COURT OF APPEALS

JUDGEMENT OF THE COURT OF APPEALS
Rod Davidson vs. SOM COA Ref. No. 11-27-SE
December 1, 2011

FACTS IN BRIEF

Following the Enduro Race (ECR) at the Atlanta Region *ARRC* at Road Atlanta on November 6, 2011, Ryan Pilla (SM # 10), the overall second place finisher, vigorously complained to Tech officials when he believed the first place car was underweight and that Tech officials were not going to recognize this fact. Mr. Pilla did not seek the proper officials and continued his argument with several assistants in the Tech Shed area. The Chief of Tech, Gary D'Abate, notified Chief Steward Jack Marr of Mr. Pilla's behavior. The Chief Steward was also advised of the underweight car and put the results of the race on hold. The Chief Steward interviewed Mr. Pilla who continued to be upset. Mr. Marr filed a Chief Stewards Action (CSA) to disqualify Mr. Pilla for violating GCR 2.1.7 (Acting in an unsportsmanlike manner). Rod Davidson, entrant for SM #10, protested the CSA on behalf of his driver. The Stewards of the Meeting (SOM) Geoff Churchill, Ken Irwin and Bob Horansky, Chairman, held a hearing, heard witnesses and upheld the CSA but noted they thought the penalty was too severe. The SOM did not believe they had the authority to change the penalty. Mr. Davidson appealed the SOM decision.

DATES OF THE COURT

The SCCA Court of Appeals (COA) Fred Cummings, Steve Harris and Jack Hanifan, Chairman, met by conference call on December 1, 2011 to review, hear, and render a decision on the appeal. Since three members of the COA (Mike West, Jack Marr and Rick Mitchell) were officials at the event, they recused themselves from hearing the appeal. The BOD Chairman appointed Fred Cummings, a past member of the Court, to serve as a member of this Court.

DOCUMENTS AND OTHER EVIDENCE RECEIVED AND REVIEWED

1. Appeal letter from Rod Davidson received November 16, 2011.
2. Official Observer's Report and related documents received November 16, 2011.
3. Witness statement from Ryan Pilla received November 16, 2011.
4. Witness statement from Julia Pilla received November 16, 2011.
5. Witness statement from Carlo Pilla received November 16, 2011.
6. Video taken by Carlo Pilla at impound in Tech Shed area with his explanation of contents received November 16, 2011.
7. Email from Bob Horansky, Chairman SOM, received November 22, 2011.
8. Email from Dave Rollow, ACS ECR, received November 30, 2011.
9. Email from Gary D'Abate, Chief of Tech, received November 30, 2011.
10. Testimony by Jack Marr, Chief Steward on conference call December 1, 2011.
11. Email from Butch Kummer, Competition Chairman, received November 28, 2011.

FINDINGS

At post-race impound following the 3 hour Enduro, the Tech Chief advised first place finisher, Chris Topping, (SM # 92), that his car was underweight. Mr. Topping told Mr. Pilla of this fact and congratulated him on the win. The Tech crew reweighed Mr. Topping's car several times in both directions per established protocol and verified the car was 6 pounds underweight. When it became apparent to Mr. Pilla that the Tech crew thought that 6 pounds was within tolerance of the Road Atlanta scales, Mr. Pilla became loud and argumentative with the Tech personnel. An unidentified worker made a profane and unacceptable remark to Mr. Pilla which exacerbated the situation. The Chief Steward was notified and informed Mr. Pilla that the underweight issue was being addressed, but Mr. Pilla continued to be upset. At the same time, Carlo Pilla, Ryan Pilla's father, was taking a video of these events including pointing the camera into the Steward's room where the Chief Steward was gathering witness accounts. Carlo Pilla was asked to cease videoing the Steward's room by Assistant Chief Steward, Laurie Sheppard, and by the Chief Steward. He refused to do so. The Chief Steward then asked Carlo Pilla several times for his credentials; he refused to identify himself or show any credentials other than a cold pass wrist band. By refusing to cooperate, Carlo Pilla violated GCR 2.1.5. (Failing to Obey a Race Official), and GCR 2.1.6. (Failure to cooperate with a Chief Steward). Although he was not officially listed as crew on Ryan Pilla's Entry, by signing Mr. Pilla's waiver, Carlo Pilla is considered de facto part of Ryan Pilla's crew. Per GCR 2.2.2., a driver is responsible for the actions of his crew.

The Chief Steward's CSA did not cite Ryan Pilla for violation of GCR 2.1.5. (Failing to obey the direction from an official), but only for GCR 2.1.7. (Acting in an unsportsmanlike manner). The CSA was based primarily on witness statements. The video supplied by Carlo Pilla which was viewed by the COA showed that Ryan Pilla acted in an unsportsmanlike manner by arguing with Tech personnel and unidentified bystanders instead of seeking out the proper authorities who could assist him.

The COA understands Mr. Pilla's frustration in dealing with the circumstances. Regardless, the COA does not excuse Mr. Pilla's

actions of violation of the GCR by him or any member of his crew. The Court reminds race officials that if the scales have been properly calibrated and certified, they are the official scales and an underweight car by any amount is noncompliant. Mr. Topping was given a three (3) lap penalty.

Further, the COA affirms that the SOM have the authority to modify the penalty, as in this case, when a CSA is protested, and the SOM feel it is warranted.

DECISION

The Court of Appeals upholds the decision of the SOM, but modifies the penalty. Mr. Pilla will receive a reprimand and a $100 (one hundred dollar) fine. This penalty will cause one (1) penalty point to be assigned to Mr. Pilla's Competition License. His first place finish at the ARRC Enduro will be restored (per GCR 7.5.). Mr. Davidson's appeal is considered well founded and his appeal fee, less the administrative amount retained by SCCA, shall be returned.

SOLO EVENTS BOARD

SOLO EVENTS BOARD | Nov. 14, 2011

The Solo Events Board met by conference call November 14th. Attending were SEB members Dave Feighner, Bryan Nemy, Steve Hudson, Mike Simanyi, Richard Holden, and Dave Hardy; Doug Gill and Brian Harmer of the National Staff; BOD member John Walsh. These minutes are presented in topical order rather than the order discussed.

Unless noted otherwise the effective date for all rule, class, and listing change proposals herein is 1/1/20*13*

Comments regarding items published herein should be directed via the website www.sebscca.com.

SAFETY

- The SEB has recommended to the BoD the approval of David Steger to the Solo Safety Committee.

GENERAL

- Regions are reminded that they may run class structures which suit the needs of their competitors, since the class and category sections of the Solo rules are not among the Mandatory Provisions of 1.1. However, the SEB recommends that Regions offer competition for all vehicles which are Nationally classed.
- The SEB has recommended to the BOD the approval of Steve Garnjobst as the Divisional Solo Events Steward for the Central Division. (#5958)
- The following items have been reviewed by the EOCC and SEB, and the committee and board thank these members for their input:
  - Stalled car at start, re-start procedure (#6017) The EOC and SEB believe the Chief Steward has the authority to resolve this issue appropriately, with full knowledge of the circumstances.

STOCK

- Based on a lack of sufficient information, the SEB is not classing the Fiat 500 at this time due to concerns about its not meeting rollover resistance requirements. (#4576)
- The SAC and SEB have reviewed the following items, and thank these members for their input:
  - Camber allowances (#5502)
  - SS classifications (#5516)
  - 997 move (#6443)
  - Mini JCW to DS move (#6459)
  - Sway bar rule (#6515)
  - Genesis V6 move (#6527)
  - Street tires (#6569)

STREET TOURING

- The SEB thanks Nick Jackson for his service as a member of the STAC.
- The SEB approved the addition of Jim Reyenga to the STAC.
- The STAC and SEB have noted that the following member input items were addressed by the ST restructure as recently approved by the BOD:
  - WRX classing (#4026, 4035, 4211,6418)
  - 2.5L turbo engines (#4717)
  - BMW listings (#5252)
  - Protégé MP3 (#5255)
  - Forester XT (#5299, 5438, 5698)
  - Infiniti G35 (#5316)
  - Saturn S series (#5321, 5322)
  - ECU and catalytic converter rules (#5748)

STREET PREPARED

- The SPAC has recommended the following class listing change proposal, presented here for member review and comment (#6214)
  - Replace the DSP Subaru Impreza 2.5 listing with:

    Subaru Impreza (1993-2001) (all)
    Subaru Impreza 2.5, NOC

  - Also remove from FSP:

    Subaru Impreza NOC

- The SPAC and SEB have reviewed the following items, and thank these members for their input:
  - 15.2.I.2, spoilers (#5080)
  - Update/backdate (#5494) The SPAC feels that the update/backdate allowance is clear as it is written. Of the examples presented, items A and B would not be considered compliant. For item C, two cars from different generations that are classified on the same line in Appendix A are allowed to interchange parts between them pursuant to the restrictions detailed in the Update/Backdate allowance.
  - Impreza move to FSP (#6177, 6179)

PREPARED

- The previously-published proposed change (February 2011 Fastrack) to the Lotus Elise/Exige listing in FP has been withdrawn. (#4434)
- The PAC has recommended that the following rules change proposal be published for member comment (#4620):
  - Add wording to Appendix A for C Prepared as follows (proposed wording shown in italics):

    "Similar configuration is defined as having the same number and arrangement (e.g., V, straight, flat, etc.) of cylinders and camshafts (e.g. Dual Overhead). Displacement changes are allowed. Alternate engines for a particular model must locate the bell housing to the block mounting surface in the same plane as the standard part. *Vertical position of the longitudinal axis of the crankshaft shall remain the same as the original engine. Tolerance for both measurements is +/- 1/2 inch*."
- The following items have been reviewed by the PAC and SEB, and the committee and board thank these members for their input:
  - Civic/CRX listing comments (#5193, 5194)
  - AWD weight formula comments (#5518)
  - GT & Production allowances (#5583)

MODIFIED

- The following proposed reorganization of the Solo Vee rules in FM is provided by the MAC for member review and comment (#5427). The intent of this rewrite is to eliminate redundancies and to organize the rules so the reader can easily find things. Changes have been introduced to bring the original rule set, written over 15 years ago, and the updated rule set, introduced 5 years ago, into harmony.

  Changes include the following:

  - The engine rules are now contained in two categories: "Engine Choices" and "Engine Component Allowances". Valve sizes and carburetor choices, which are in two places in the current rules, are now found in a single location.
  - Weight minimum is now in its own category. In the current rule set it is included in the definition of the category.
  - All sub-categories have their own section.
  - There was minor rewording of rules (particularly of the disc brake rule) to improve clarity. (The current rule--D.3.f.--refers to rear brakes. The proposed rule set clarifies the disc brake rule to include front and rear brake systems.)
  - The current Solo Vee rules included an allowance for radiator fans for F500s (as well as Solo Vees). If this reorganized rule set is adopted, a radiator fan item will be added to the F500 section.

  The proposal is as follows:

  Replace subsection C under Modified Class F in Appendix A with the following:

  "C. Solo Vee as per the following definition: Solo Vee is based on FV and all cars shall meet all specifications described in Sections 9.1.1.C.1, C.2, C.3, C.4, C.6, C.7, C.8, C.9, C.10, C.11 and C.12 of the GCR/FCS except as amended in these rules. No permitted or alternate component or modification shall additionally perform a prohibited function.

  1. Engine Choices

     a) Any stock 1600cc or smaller air-cooled automobile engine manufactured by Volkswagen (VW) for sale in VW vehicles available to the general public for purchase in the US is allowed.

     b) Solo Vee engines may have increased compression up to and including 10:1 ratio with OE bore and stroke. Compression ratio may be increased by additional machining of any factory machined surface on the cylinder heads only. Fuel injection is prohibited. Valve size may be increased to a maximum of 40 mm intake and 35.5 mm exhaust. Port location may not be changed from OE stock. Machining of any type in the combustion chamber such as, but not limited to, valve unshrouding, is prohibited. Valve guide centers shall remain OE stock. OE stock heads shall be used, however, alternate VW heads with casting numbers 040 101 355 or 043 101 375 may be substituted. Any single carburetor (regardless of the number of venturis) is permitted. Multiple carburetion is restricted to a

maximum of two 44mm carburetors with 28mm ventures. If a balance tube is used between manifolds runners, it shall be restricted to one 1/2-inch ID pipe. Any intake manifold not having a plenum chamber is permitted.

OR

c) Increase bore up to and including 94 mm maximum per cylinder, total displacement of 1915 cc. Machining to allow the installation of the cylinders is permitted. No other combustion chamber machining such as, but not limited to, unshrouding of the valves, is permitted. Valve guide centers must remain OE stock. Increased displacement engines up to 1915 cc are restricted to maximum valve sizes 39 mm intake and 32 mm exhaust. Port location may not be changed from OE stock. OE stock heads shall be used, however, alternate VW heads with casting numbers 040 101 355 or 043 101 375 may be substituted. A maximum compression ratio of 9:1 is permitted. Compression ratio may be increased by additional machining of any factory machined surface on the cylinder heads only. Any single carburetor may be used. Multiple carburetors are prohibited. Any intake manifold not having a plenum chamber is permitted.

d) There shall be no “mixing” of allowances, e.g. carburetors from “c” and displacement from “b” above.

2. Engine Components

a) Mixing of parts between different air cooled engine models is permitted. All parts must meet VW specifications for engines delivered for use in the US in VW vehicles unless otherwise noted herein.

b) Balancing of all moving parts is permitted provided balancing does not remove more material than necessary to achieve balance.

c) Parts from alternate manufacturers or remanufactured parts are permitted provided said parts are of the same material, are dimensionally identical, and meet all original VW specifications for engines delivered for use in the US in VW vehicles. This would include VW replacement heads as specified without raised ports and aluminum engine cases. Aftermarket magnesium engine cases may also be substituted.

d) The flywheel from either the alternate engine or from the 1200cc engine may be used. Minimum flywheel weight is twelve (12) lbs. Any single disk clutch may be used. The transmission housing may be machined to provide clearance when using the alternate engine flywheel assembly.

e) Any exhaust system which terminates more than three inches behind the rearmost part of the body may be used.

f) Counterweighted crankshaft and eight-dowel pinned crankshaft-to-flywheel mounting are allowed. All journal dimensions and relationships with each other must remain as stock. Crankshaft journals may be ground undersize a maximum of 0.030” less than stock dimensions. Crankshaft pulley is unrestricted.

g) Deep sump oil pan up to 2.5 quart additional capacity is permitted. The installation of baffles housed completely within the oil pan and crankcase is permitted. The use of any standard VW oil pump is permitted. Dry sump systems are prohibited. Replacement of oil gallery plugs with threaded plugs is permitted. Oil filters and oil coolers are unrestricted provided that they are securely mounted completely within the bodywork. A pressure accumulator (e.g. Accusump) may be fitted.

h) Camshaft and valve train components are unrestricted with the following exceptions:

1. Pushrods shall be made of metal.

2. Valve lifters (tappets) shall be dimensionally and functionally identical to and made of the same material as the standard VW parts.

3. Roller camshafts are prohibited.

4. Rocker arms shall be standard ratio VW.

5. Valve guide material is unrestricted provided that the distance between valve centers and the angles of the valves does not change.

i) Porting, polishing, and machining of the intake and exhaust ports is permitted. The addition of material in any form is prohibited. Valve seat angle(s) are unrestricted.

j) Compression ratio may be increased by additional machining of any factory machined surface on the cylinder heads only. Installation of a spark plug hole repair utilizing standard thread repair methods (such as Helicoil) is permitted providing that the spark plug centerline is not changed.

k) Complete or partial removal of any cooling duct component. Removal of the fan and the fan housing is permitted. Any electric fan is permitted for cooling the engine or engine oil.

l) Voltage regulator, generator, and/or generator stand may be removed.

m) One or more batteries may be used.

n) Any ignition system that utilizes a distributor for spark timing and distribution may be used. Distributor shall require no modification to the engine for installation. Internal distributor components and distributor cap may be substituted.

o) Valve covers are unrestricted and may be bolted on.

3. Transaxle

a) Aftermarket shift forks/shift rod/mounting parts and alterations required for their installation is permitted with the intent of facilitating reliable H-pattern shifting.

b) This allowance does not include sequential shifting (push button or single axis lever movement) mechanisms or electric/gas assist. Cable/hydraulic actuating mechanisms are allowed.

c) A device for locking-out reverse gear may be used.

d) A limited-slip differential (LSD) is permitted.

4. Bodywork

a) Bodywork to the rear of the main roll hoop may be removed.

5. Front Suspension

The front suspension shall be standard VW Type I sedan H-beam front suspension (i.e., link pin or ball joint) or an exact replica of one of them and dimensionally identical. Aluminum H beams are prohibited. The following modifications are permitted:

a) Lugs may be welded, brackets attached by welding or otherwise, and holes drilled in the H-beam to permit attachment of the beam to the chassis, and components wholly or partially to the beam. Brackets may be welded to the torsion arms for the sole purpose of actuating the shock(s) and/or external mounted anti-roll bar and shall perform no other functions.

b) Open springs. Torsion bars may be used in conjunction with coils or may be removed entirely. Coil-overs are permitted.

c) Removal of the shock towers above the upper H-beam tube centerline.

d) Relocation of the shock dampers is permitted. Shock dampers and their actuation are free.

e) The use of any anti-roll bar or bars, internal or external, mounting hardware, and trailing arm locating spacers. The anti-roll bar fitted as part of the standard suspension may be removed. Anti-roll bars may not be cockpit adjustable.

f) Replacement of torsion bar rubbers with spacers of another material.

g) Installation of any ride height adjuster(s) is allowed.

h) Removal of the drum brake backing plates is allowed.

i) In the link pin suspension, non-standard offset link pin bushings may be used in order to obtain desired negative camber. Clearancing of carrier or trailing arm to prevent binding is permitted. The rubber portion of the bump stop may be removed. Caster, camber, toe-in, and link pin inclination are free.

j) In the ball joint suspension, the camber/caster adjusting nut may be replaced with an aftermarket nut of different design. Caster, camber, and toe-in are free.

k) Any wheel bearings that fit the VW sedan spindles and brake drums or disk brake hubs without modification may be used.

l) Steering column may be altered or replaced. Steering wheel is free and may be detachable. Steering mechanism is free but tie rods must attach to the spindle using existing steering arm, a modified steering arm, or a suitable new or modified bracket welded to the spindle. Ball joints in the tie rods may be replaced with rod ends.

6. Wheels

a) Any wheels and tires are allowed. Resulting track changes are allowed. Studs may be substituted for wheel attachment bolts in the original location.

b) 4 or 5 lug wheel hubs may be used. Wheel mounting lug bolts may be replaced with studs.

7. Rear Suspension

a) The rear axle and tube assembly shall be standard VW Type I up to 1966, sedan swing axle (no outer pivot point for a half shaft) with axle location provided by a single locating arm on each axle. The rear axle tube may be rotated about its axis. The standard shock mounting and brake pipe brackets may be removed.

b) The rear axle bearing retainer flange mating surface may be machined or shims may be installed under the rear axle bearing for the sole purpose of adjusting bearing axial float.

c) Springs, shock dampers, their actuation, and camber compensating devices are free.

8. Braking System

a) Standard VW Type 1-3 brake components, disk or drum, may be used including any standard VW Type 1-3 original. Use of aftermarket hubs, disc or drum brake components in the front or rear of the vehicle, or any combination thereof is unrestricted as long as the units chosen are deemed safe.

b) Caliper housing material may be removed on the outer radius surface of the outer piston housing to clear the inside of the rotating wheel.

c) Any type lining or pad material may be used.

d) Adapter plates may be fitted to allow mounting of front or rear brake calipers.

e) Cross-drilling or grooving of rotors is permitted. Rotors made of a ferrous material shall be used on both the front and rear of the car.

f) Caliper mounting is free. Rotors must be of ferrous material. Hubs and hats may be made of ferrous material or aluminum.

The allowances above apply to front and rear brakes.

g) The car shall be equipped with a dual braking system operated by a single control. In case of a leak or failure at any point in the system, effective braking power shall be maintained on at least two wheels.

h) A separate hand brake is not required. Removal of the hand brake and operating mechanism is permitted.

i) Brake lines may be of any suitable material, including steel braided lines.

9. Weight

a) Minimum weight is 1000 lbs with driver."

- Per member input, the MAC is seeking comment on the possibility of additions to Solo Vee allowances in FM. Such additions might include induction, engine, and/or suspension modifications. Members are encouraged to write with suggestions and feedback regarding these possible changes (#6151).
- The following items have been reviewed by the MAC and SEB, and the committee and board thank these members for their input:
  - Rotax 593 (#5256, 5998) This subject was addressed in the items recommended to the BOD, as published in the November Fastrack.
  - Legends cars (#6044) This subject was addressed in the items recommended to the BOD, as published in the November Fastrack.
  - MAC position (#6399)
  - DM/EM forced induction (#6205, 6212, 6222, 6302, 6423, 6424) The MAC continues to work on possible proposals in this area.

F125 / FORMULA JUNIOR

- The following items have been reviewed by the KAC and SEB, and the committee and board thank these members for their input:
  - 4-stroke engine comments (#3852, 3976, 4043)
  - Raptor fuel (#3845)
  - Dry clutch (#4104)

NOT RECOMMENDED

- Stock, reducing allowances (#4846)
- Stock, move ZX2 to HS (#5933)
- Street Touring, Toyo R1R, exclusion list (#3806). The STAC has considered this and does not feel it is necessary.
- Street Touring, ST class addition (#4513, 4528, 4541, 4548, 4562, 4564, 5148) The STAC may be open to concepts like these in the future but prefers to observe the effects of recent changes to the classing structure before pursuing additional new classes.
- Street Touring, Torsen limited-slip (#5059) The STAC does not believe it would be appropriate to disrupt the competitive balance of the affected class.
- Street Touring, Mazdaspeed 3 classing (#5252)
- Street Touring, right-hand drive cars (#6216, 6223) Per the STAC, non-domestic-market cars do not meet the category eligibility requirements.
- Street Touring, Protégé to STF (#6304) Per the STAC, this car has been shown to be comparable to various other STC cars, and the committee believes it would disrupt the competitive balance of STF.
- Street Prepared, AWD classing (#6099) The SPAC feels that many of these concerns were addressed by the 2012 reorganization.
- Street Prepared, timing cover rule (#6186) Per the SPAC, the proposed rule change does not change the VVT or cam gear allowance. It only changes the existing timing cover allowance to permit more competitors to utilize this allowance.
- Prepared, rotary engine weights (4886) After further review, the PAC doesn't feel any adjustments are required to the rotary engine weight formula in EP at this time.
- Prepared, GP wheel widths (#6125) Wheel width restrictions are a key component used to balance the competitive potential of various vehicles in GP. The PAC is concerned that increasing wheel width allowances in GP would upset the competitive balance of the class.

TECH BULLETINS

1. Stock, Errors and Omissions: with the BOD approval of the SAC's proposal regarding camber bolts, the Appendix F item which is titled "Hyundai Genesis R-Spec Alignment Bolts" is no longer applicable and is to be removed.

2. Stock: The Suzuki Kizashi (2010-2011)was initially listed in HS in the June 2011 Fastrack (#6584)

3. Stock: Per the SAC, regarding the front spoiler and rear wing on the S2000 CR: As stated in the 3rd paragraph of Section 13, vehicles must be run as specified by the factory. The S2000 CR is delivered from the factory with the front spoiler and rear wing and such this is an authorized configuration. (#6502)

4. Stock: Per the SAC, ride height changes due to variances in damper gas pressure are permitted by the provisions of 13.4 (#6442)

5. Stock: The following clarification has been recommended by the SAC and approved by the SEB: Add to the end of 13.9.A (after capacitor and before the parenthetic phrase): "*Substitution or addition of ignition coil mounting brackets is permitted, provided they affix to the factory location and serve no other purpose.*" (#6297, 6311)

6. Stock: The following listing update, recommended by the SAC, is effective immediately upon publication (#6086):

   Amend the FS listing for the BMW 5 series to read as follows:

   5 series (NOC)

   NOTE: The intent of this listing update is to include the V8 non-M 5-series BMW's in FS

7. Stock: Per the SAC, their revised version of the published change to 13.7 should have included relocation of items from subsection D to subsection A, such that the changed version should read as follows:

   "13.7 ANTI-ROLL (SWAY) BARS

   A. Substitution, addition, or removal of *a single* anti-roll bar and supporting hardware (brackets, end links, bushings,

etc.) is permitted. The use of any bushing material is permitted. A bushing may be implemented as a bearing.

B. Substitution, addition, or removal of an anti-roll bar may serve no other purpose than that of an anti-roll bar.

C. No modification to the body, frame, or other components to accommodate anti-roll bar addition or substitution is allowed except for the drilling of holes for mounting bolts. Non-standard lateral members which connect between the brackets for the bar are not permitted."

8. ST: The prohibition on cutting of holes for sway bar installation applies only to the routing of the bar or links, as stated in 14.7 (#3395)

9. ST: The removal of OE roll hoops for installation of an allowed roll bar has been addressed in the Stock rules, via changes to 13.2.H as published in the March and November Fastrack. These rules carry over to ST. (#3803)

10. ST, Errors and Omissions (#4522): Per the STAC, the 2004-2005 MINI COOPER S with dealer-installed JCW package has been classed in STX since 2006. This was published in Fastrack, but was missed in the rulebook. The complete STX model listing should read:

    MINI Cooper S & Cooper S JCW (includes 04-05 dealer-installed)

11. ST: Per the STAC, add the following after the first sentence of 14.10.D: ***"Mounting bracketry which serves no other purpose is considered part of the exhaust component."*** (#5077)

12. ST: Per the STAC, add the following to 14.2.F.2: "*This does not allow for parts sold through the manufacturer's performance division catalog (e.g. Ford Performance, Mopar Performance, Nismo, TRD, Mazdaspeed, HPD, Mugen, SPT, etc.)"* (#5200)

13. ST: There is no requirement to fill or cover the holes left by the removal of a fog light as allowed by 14.2.C (#6185)

14. ST: Per the STAC, 14.2.A should be clarified to read as follows: "Pedal *cover* kits and other interior…" (#5350)

15. ST, Errors and Omissions: Per the STAC, the listing in STR for the Miata should read as follows (#6448, 6453):

    Mazda MX-5 Miata (2006-*2012*)

16. ST: Per the STAC, the Corolla listing in STF should only include the latest two generations ('03-''11), not the earlier generation ('98-'02) and thus should read as follows (#6616):

    Toyota Corolla (2003-2011)

17. SP: The following new listing, recommended by the SPAC, is effective immediately upon publication (#5918):

    VW Golf/Jetta 2.0T (2006-2011) DSP

18. SP: Per the SPAC, the following listing clarifications are effective immediately upon publication:

    The BMW Z3 models in BSP should be on one line, which reads as follows

    Z3 all 6-cyl including M Coupe/Roadster

    The BMW Z4 models in BSP should be on one line, which reads as follows:

    Z4 all non-turbo including M

19. Modified: Per the MAC, the floor pan of a car whose original width is smaller than the dimensions required by 18.1.C (37 in. width for front-engine cars, 42 in. width for mid and rear-engine cars) may be widened to meet the requirement. Recognizability, material, and safety requirements of 18.1 must all be met, and the car will be subject to Modified Tub (18.1.C.2) weight requirements. (#5692)

20. Modified: Per the MAC, Section 18.5.E is intended to provide for FSAE cars to run within AM as a Supplemental class, but to be scored separately for awards purposes. It is therefore being clarified to read as follows:

    "These vehicles are assigned to *Supplemental Class FSAE, which may be run as a subgroup of AM but shall be scored separately. An FSAE car may only compete directly in AM if it meets all AM requirements and specifications. FSAE cars* must also meet the following minimum criteria: " (#6168)

21. Modified: Per the MAC and SEB, the following clarification is provided for 18.3: When used in eligible cars in class CM, the Honda Fit engine is required to have an air inlet restrictor which meets the requirements of the current GCR, correctly installed within the intake system. The restrictor may not be modified in any way; the specified value can not be exceeded in any measurement of the diameter. The restrictor centerline or shape must not be altered. NOTE: the SEB will be following the actions of the CRB in order to evaluate changes they may make to the restrictor requirement for this engine.

RALLYCROSS BOARD

RALLYCROSS BOARD MINUTES | December 7, 2011

The RallyCross Board (RXB) met via conference call December 7. Attending were Ken Cashion, Chairman, Tom Nelson, Bob Ricker, Brent Blakely, Karl Sealander, Warren Elliott, Stephen Hyatt and Ron Foley. Also in attendance were Todd Butler, BOD liaison, and Howard Duncan and Brian Harmer from the National office.

The Secretary acknowledges that these minutes are not in chronological order.

Committee Reports

1. RallyCross Safety Committee (Tom Nelson): The Safety Committee will need new chairman. More discussion of the options will occur beyond this RXB meeting. The goal is to have more non-RXB members on the Committee. Tom Nelson discussed three separate rollovers in the last month. From his evaluation of each incident, there are no trends. There has been some resulting discussion of course design changes suggestions. Tom Nelson emphasized the need for Regions to have better communication of incidents to the SCCA.

2. RallyCross Rules Committee (Warren Elliott): None.

3. National Championship Committee (Ken Cashion): None.

4. Divisional Steward Liaison (Stephen Hyatt): Aaron Miller is now the new Rocky Mountain Divisional Steward. There is a need for more participation in meetings from the Stewards. The Stewards expressed a desire for about $350 per Division per year expense reimbursement for fuel, lodging, and Divisional Conventions and Roundtables. National Convention financial assistance at some level will probably be available to the Stewards in an effort to encourage a higher level of National Convention attendance.

5. Forum Activity: There has been minimal forum activity in the last month.

Old Business

1. Growth discussion:
   a. Regional Program Development Assistance (Stephen Hyatt): A site acquisition packet could be developed, or revised from existing Regional packets, by a committee of individuals (preferably Regional program directors) experienced in the process of site acquisition.

   b. Rules Evolvement for Relevance and Accessibility (Warren Elliott): Would the addition of a “Street Modified” class increase involvement? Adding it as an experimental class for 2012 is an option. There is a question as to whether or not we still need the SR or PR classes? Of the two, SR seems more expendable than PR. The plan is to get comments from the membership on the forum or through email correspondence.

   c. Marketing and Communications Plan (Ron Foley): The Facebook page seems to be getting some activity. The hope is to start filling out the National Challenge schedule soon so that competitors can start planning for any related vacation time. The 2012 RallyCross Rules will be published and posted by the first week of January.

   d. National Program Enhancements (Ken Cashion): Details of the National Challenge are currently in question. Ken Cashion will be contacting the Divisional RallyCross Stewards to work out the details.

2. Parade laps two-driver cars: The goal at the National events is to keep to the schedule and to provide as many runs to the competitors as possible. There has been a lack of cooperation from some competitors in this regard. As a result, the RXB decided to retain the policy of one parade lap per vehicle at National events.

3. Convention seminars and awards: RallyCross sessions for the 2012 National Convention will include a RallyCross school session with an accumulation of best practices, a new-to-RallyCross Q&A, a Town Hall with a State of RallyCross introduction, and a couple of closed RXB sessions, one of which will be with the Divisional RallyCross Stewards. Three awards will be presented at the Convention: the Dirty Cup, Divisional Achievement Award, and Regional Achievement Award. Award recipients will be selected at the January meeting.

New Business

1. Detroit incident: In light of a recent incident in the Detroit Region, Ken Cashion discussed his conversations with the Region’s RE and the plans to make improvements in the Region’s RallyCross program. The RXB is encouraging the Region

to make all necessary changes to ensure safe and successful events. The Region RE has issued a safety improvement plan detailing their intended course of action.

2. Howard's BOD report: Overall RallyCross numbers were down 2.6%, which comparably for 2011 is good within the SCCA. Low National Challenge numbers are a concern. Addressing this concern, the RXB discussed whether the event expectations for 2-day events with dinners, T-shirts, etc. might contribute to increasing event costs and agreed that the goal of National Challenge events is to be a destination event (a RallyCross festival). Strategies are being considered to lessen event costs such as the National office providing trophies and changing previously held expectations.

3. National staff changes / needs and expectations: Two National staff positions have been eliminated necessitating a redistribution of tasks between Rally and Solo, which will now be more integrated with tasks within administration and development being combined.

Next meeting: January 4, 2012

ROAD RALLY BOARD MINUTES | Dec. 6, 2011

Sports Car Club of America
***RoadRally* Board Minutes**
Via Conference Call
December 6, 2011

The *RoadRally* Board (RRB) met via conference call on Tuesday, December 6, 2011.

Attending were: Chairman, Jim Wakemen; members: Jeanne English, Sasha Lanz, Chuck Hanson; Howard Duncan, National Office; incoming RRB members Clarence Westberg and Rich Bireta. Not in attendance: Lois VanVleet and Eva Ames, and Bill Kephart, Board of Director Liaison.

Proceedings

1. November, 2011, RRB minutes approved (Hanson/Lanz).

2. Rally Liaison updates
Rally changes and Liaison updates are in **red** below.

2012 Rallies / Liaisons:
Yucatan Safari, NT, LOL (Dec 10) - Wakemen
AZ Border, NC (March 9) - English
AZ Border, NT (March 10) - English
The National Road, NT-NC-NGTA, Indianapolis (June 23) - English
The International Road, NT-NC-NGTA, Indianapolis (June 24) - English
Steel Cities, Aug 4/5?

Yucatan Safari is this weekend, Wakemen reports that everything looks ready to go, event regulations cover items usually found in RRRs (so contestants can run without the RRRs).
Sanctions not yet in for Arizona rallies.
Hanson reported that pre-checks for the Indianapolis rallies are already being scheduled.
August Steel Cities' event is being written by Bruce Gezon as a two-day event.
2012 USRRC: still working on finding a host region; John Sears, with Karl Broburg and Dave Jameson, made an offer on behalf of AZ Border via the RoadRally Yahoo list (not submitted to the RRB); Detroit Region contacted Deena for information about what is required including whether they could move the date a week or two, Chuck Hanson will follow up with them.

3. New RRB Members for 2012
The Board of Directors has approved Clarence Westberg and Rich Bireta as Road Rally Board members effective January 1, 2012. Welcome! We thank Lois VanVleet for her six years of service. Howard presented a chart with RRB members and DRRSs, and their appointment dates; some errors were noted and corrected.

4. RRB Positions
The BOD approved Jim Wakemen as chairman for 2012. Jeanne English will be secretary and continue as the Rules Committee Liaison as well. Hanson will continue the Mentoring Program Committee. Lanz will continue the Publicity Committee. Ames will have the Communications Committee.

5. Convention 2012
Hanson agreed to do a "How to start a rally program" session (as recently presented at the GLD Round Table). English will do "How to keep costs down or innovative, inexpensive trophies and paper cost" session, as well as a session for RoadRally Safety Steward Training. There may be another Walking Rally. Howard Duncan reported one of the RE sessions will be for smaller programs (rr, rx, time trials, solo) to present 10 minute 'highlights' to regions; he suggested that our presentation include social rallies as first/baby steps toward adding rally to their regions. The RRB meeting with the BOD has been moved to Thursday midday. Duncan also reported that the BOD in not looking for a reason to eliminate road rally from SCCA, they consider it a "legacy activity"; RR still needs to keep moving its programs forward. Convention awards: the Ridges Award will not be given out this year; regional and divisional awards will be discussed next month.

6. Concerns Tracker
Wakemen will put something together soon and put it in the RRB DropBox. He will invite Westberg and Bireta to our DropBox, and will put our agendas there.

7. Experienced Based Classes
Hanson sent us emails with proposals about experienced based classes; discussion postponed until January to give us more time to read the proposals.

8. APP Class
Hanson/Mike Thompson submitted a proposal about a new APP class; discussion postponed until January to give us more time to read the proposals.

9. RRB DropBox
See item 6 above.

10. Weekend Membership Data Response
Lanz sent the RRB his proposed response to Rick Myers about collecting data from the Weekend Membership forms; we will continue this discussion via email. Howard reported that there were really 2 issues – money and having the data available to use as a promotional tool; the problem with Topeka is that no one else has asked for the info that we want.

11. Photo Contest
We need someone to handle it; Jim to ask Rick Beattie; also some discussion about video and/or slide show. We need a photo for the cover of the new RRR book – what about a previous photo contest winner?

12. Newsletter Report
Nothing to report.

13. Forum Issues
The RRB is trying to actively respond to items/issues posted on the SCCA Forum (see items 7, 8, and 11 above). Some RRB members were surprised that there was no reaction to the posting about Pego's position (Rally/Solo Manager) being brought back 'in-house' to Topeka and Pego being let go as an outside contractor.

14. Old Business
A Divisional Steward is still needed for NORPAC.

15. New Business
Sasha had 2 items: 1. that there be single subject ad hoc/focus groups to present ideas to the RRB, that we create methodology for people to 'put their money where their mouth is"; 2. that the USRRC be a cooperative venture between the RRB and the committee – a "USRRC Support Committee" wherein the RRB can help with PR and/or other support as needed, perhaps even including monetary support; that the USRRC not just be dumped on a committee and let them deal with everything; more next month.

Howard Duncan asked it we thought there would be Interest in tiered SCCA memberships, i.e. different levels get different benefits; this is being actively discussed at SCCA headquarters.

Re: RRR printing – Howard reported that if it is printed through FedEx (SCCA member benefit) it would be about $3 per book. Westberg asked if it could be posted online in other formats (i.e. for Kindle), and also asked about adding things such as simple tables.

2012 RRB meetings: we would like the conference calls to be on the first Tuesday of the month; Howard will check to see if these days are available.

Next meeting – Tuesday, January 3, 2012 at 7:30 pm CST, via conference call.

Submitted by Jeanne English, acting RRB Secretary.

QUICK LINKS

The following items have been removed from regular inclusion in FasTrack News and can be found on SCCA's Web site at the following links:

CLUB RACING

Accredited Driver Licensing Schools: http://www.scca.com/clubracing/content.cfm?cid=50864
Forms: http://www.scca.com/downloads/#club
Technical Forms: http://www.scca.com/clubracing/content.cfm?cid=44472
General Competition Rules (GCR): http://www.scca.com/clubracing/content.cfm?cid=44472
2011 Runoffs home page: http://www.scca.com/events/index.cfm?eid=3128

SOLO

Forms: http://www.scca.com/downloads/#solo
Rulebook: http://www.scca.com/downloads/#solo
2011 Tire Rack SCCA Solo National Championships home page: http://www.scca.com/events/index.cfm?eid=3022

RALLY

Forms: http://www.scca.com/downloads/
Rulebooks: http://www.scca.com/downloads/

SCCA NATIONAL CONVENTION

Event page: http://www.scca.com/events/index.cfm?eid=3263

EVENT CALENDAR: http://www.scca.com/events/

Fastrack® news
official SCCA member notification
EFFECTIVE FIRST DAY OF THE MONTH UNLESS OTHERWISE NOTED February 2012

CONTENTS

BOARD OF DIRECTORS	**NONE**
CLUB RACING	**1**
CRB Minutes	1
Technical Bulletin	10
Court of Appeals	NONE
Time Trials Admin. Council	14
SOLO	**15**
SEB Minutes	15
RALLY	**20**
RallyCross	20
RoadRally	22
LINKS	**24**

CLUB RACING BOARD

CLUB RACING BOARD MINUTES | January 3, 2012

The Club Racing Board met by teleconference on January 3, 2012. Participating were Jim Wheeler, Chairman; Chris Albin, Fred Clark, Jim Drago, Peter Keane, Tom Start, Mirl Swan, and Pam Richardson, secretary. Also participating were: Todd Butler and Richard Patullo, BoD liaisons; Terry Ozment, Vice President of Club Racing; Doug Gill, General Manager, Technical Services Department; and John Bauer, Technical Services Manager Club Racing. Guests included Bob Dowie and Dave Gomberg. The following decisions were made:

SUGGESTED RULES FOR 2012

The following subjects will be referred to the Board of Directors for approval at the National Convention (if approved these rules will be effective April 1, 2012). Address all comments, both for and against, to the Club Racing Board. It is the BoD's policy to withhold voting on a rules change until there has been input from the membership on the presented rules. Member input is suggested and encouraged. Please send your comments via the form at http://www.crbscca.com/ or www.clubracingboard.com . Please send a separate comment letter on each subject.

GCR

1. #6706 (Jim Murphy) Protect against oil fires with heat shielding

Thank you for your letter. Heat shielding is permitted and encouraged, but is not mandated. The CRB suggests adding the following sentence to the end of GCR 9.3.28: *Heat shielding between fuel/oil lines and fuel/oil filters and exhaust components is strongly recommended.*

FORMULA

F600

1. #6901 (CRB) Revised F600 rule set

The following is the proposed rule set for a regional-only F600 class in accordance with the BoD guidance from its December 2011 meeting. All F500 rules remain unchanged except the following: K.6 and K.14 are replaced in their entirety; K.16 is included in K.14; K.17.A is superfluous and K.17.B does not apply.

K.1. Definition

A class for singleseat, open wheel, rigid suspension race cars using 600cc motorcycle engines. Specifications are restrictive in nature in order to emphasize driver ability rather than design.

Formula 600 is a restricted class. Therefore, any allowable modifications, changes, or additions are as stated herein. There are no exceptions. IF IN DOUBT, DON'T. Homologation is required for all cars.

K.2. Weight and Dimensions

Minimum weight as qualified and raced, with driver, shall be 875 pounds.

Wheelbase:	*Maximum*	*80 inches*
Overall Length:	*Minimum*	*110 inches*
	Maximum	*150 inches*
Overall Width:	*Minimum*	*50 inches*
	Maximum	*55 inches*

K.3. Suspension

Suspension shall be restricted and of a safe, suitable design. "Restricted" is defined as follows:

A. There shall be no springs or shock absorbers acting either directly or indirectly between the frame/chassis and axle.

B. Rear driving axle shall be of solid or tubular steel. Axle shall be one piece live axle, driving both rear wheels. Trailing arms are allowed. Differentials and/or slip joints are not permitted. The object of K.3.B is to eliminate independent rear suspension of any type, or provision for lateral movement of the axle shaft to facilitate independent type suspension.

C. Blocks, bushings, and/or mounts of rubber or similar material shall be used to isolate engine and drive assemblies, and/or axles from vibration, shock, or track irregularities. The number of mounts shall not exceed one (1) per wheel and shall not exceed one (1) inch in thickness in uncompressed state nor shall they be stacked. The diameter of the mounts shall not exceed two (2) times their thickness. The mounts shall carry the weight of the car. Installation will be evaluated on compliance

with both the letter and the intent of this provision.
D. Front axle(s) design and/or mounting configuration shall be such that the axle(s) does not function as a torsion bar. Split axle/independent front suspension is permitted so long as suspension control is affected solely by the mounting defined herein.
E. Anti sway bars are not permitted.

K.4. Brakes

Brakes shall be foot-pedal operated, hydraulic disc ~~or drum-type,~~ acting on all four wheels. The brakes shall be a dual system, arranged in a manner to provide braking for at least 2 wheels in the event of failure in part of the system.

K.5. Steering

Steering is unrestricted provided it is of a safe and suitable design.

K.6. Transmission and Final Drive

A. *Only rear wheel drive is permitted.*

B. *The final drive ratio is unrestricted. Internal transmission gears shall remain stock.*

C. *Engines must use the sequentially shifted motorcycle transmission as supplied with the engine. Reverse gear is not required.*

D. *All gear changes must be initiated and made by the driver. Only mechanical gear shifting mechanisms are permitted. This may include cables, rods, or other mechanical linkage systems. All other shifting mechanisms are not permitted. This prohibition shall include electric solenoid shifters, air-shifters, etc. Devices that allow pre-selected gear changes are also prohibited.*

E. *The clutch assembly is unrestricted except that the clutch engagement system shall be operated solely by driver input and may be mechanical or hydraulic in nature. The driver's hands or feet must manually operate the clutch and there shall be no operation of the clutch by any assisted method. There shall be no modifications to the engine/transmission to enable the use of replacement clutch components or assemblies.*

F. *Mechanical throttle mechanisms must be used on all engines. Computer, electronic or pneumatic control of the throttle position is not permitted.*

G. *The use of jackshafts to transmit power from the output shaft to the rear axle is permitted.*

H. *Final drive chain tensioners are permitted.*

K.7. Frame/Chassis

The frame/chassis assembly shall be constructed of steel tubing, and shall be of a safe and suitable design. There shall be a bulkhead incorporated in the chassis forward of the soles of the driver's feet with the pedals depressed. Forward facing braces protecting the driver's legs and feet shall extend from the front roll hoop to the front bulkhead, unless foot protection is provided in accordance with 9.4.5.G.1.B.

The soles of the driver's feet shall not extend beyond the front edge of the wheel rims (in normal position; i.e., pedal not depressed).

K.8. Roll Cage

Cars shall have a full roll cage complying with section 9.4.5, made of steel, and designed so that when viewed from overhead, an opening, having a minimum width of fourteen (14) inches and a minimum length of seventeen (17) inches is available for driver extraction under emergency conditions.

K.9. Bodywork

All mechanical components of the car, forward of the roll cage, shall be covered by suitable bodywork. Exceptions are the wheels, brakes, front suspension components, and the cockpit. Driver's seat shall be capable of being entered without the removal or manipulation of any part or panel. Sports car noses are recommended provided they do not extend beyond the outside edge of the front tires, do not stand taller than the top of the front tires, and their rearward most portion does not extend beyond an imaginary line drawn from the center of the front wheel, forty (40) degrees forward from vertical. Bodywork behind the front wheels and forward of the rear wheels shall extend to within one (1) inch of a line connecting the outer edges of the front and rear wheels. In a horizontal plane, it shall begin within 2.5 inches of the rear-most part of the tire in the completely turned position and extend to within 4.5 inches of the front of the rear tire. The side pod(s) shall be continuous from the outside edge of the main bodywork, at a minimum height of nine (9) inches, maximum twelve (12) inches measured from the bottom plane of the car. The side pod(s) shall be closed across the front except for air duct openings to heat exchanger(s), but ALL ducted air shall pass through those exchanger(s). The side pod(s) may be open to the rear. Side pod(s) is (are) intended to restrict wheel entanglement between cars. The purpose of these rules is to minimize the use of "ground effects" to achieve aerodynamic down force on the vehicle. Thus, for full width of the body between the front and rear axles, the lower surface (surface licked by the airstream) shall not exceed 2.54cm (1 inch) deviation from the horizontal in any longitudinal section through that surface. (This is not to be interpreted as requiring a floor pan beneath the engine or rear axle.) The bodywork shall not extend below the surface of the chassis floor to the rear of the front axle. Seat bucket or other protrusions shall not circumvent this rule. It is not permitted to duct air through any part of the bodywork for the purpose of providing aerodynamic down force on the car. Wings are prohibited.

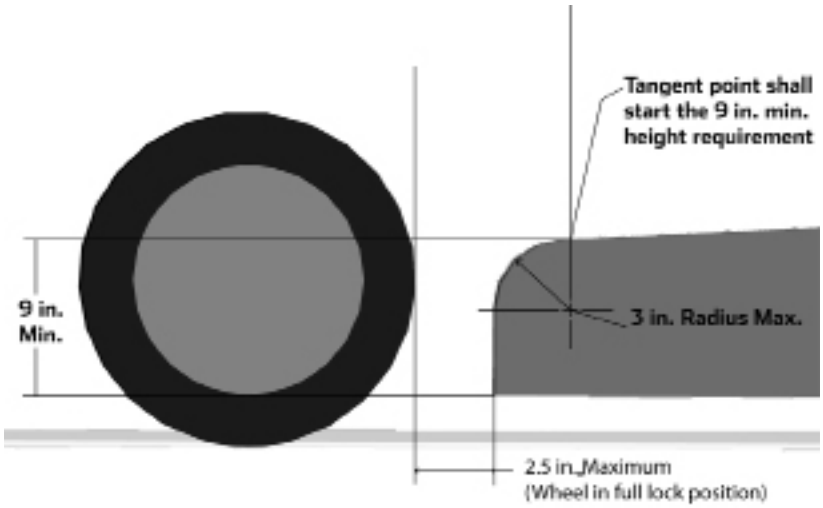

K.10. Tires

Any recognized ten (10) inch racing tire with any tread width up to a designed 7.5 inch width may be used. Any HR rated radial tire may be used as a rain tire.

K.11. Wheels

Wheels shall not exceed a ten (10) inch diameter and 8.5 inch width.

K.12. Ballast

Ballast may be added to meet the minimum weight requirement provided it is securely mounted within the bodywork and serves no other purpose. It is recommended that underweight cars be brought to the minimum limit by adding strengthening material to areas providing driver protection; i.e., roll cages, frame rails, etc., rather than simply bolting in additional weight.

K.13. Fuel Tank

The fuel container shall be located within the bodywork, ahead of the rear wheels and behind the centerline of the front wheels.

K.14. Engines

A. Mass produced Honda, Kawasaki, Suzuki or Yamaha water-cooled, 4 cylinder, 4-cycle motorcycle engines up to 600cc are allowed.

B. It is the purpose of this section to control the power level of current and future F600 engines to be approximately the same. Thus all engines must use individual inlet restrictors (IIRs) that comply with Appendix F, Flat Plate Intake Restrictor, except the third and fourth bullet items. The IIRs holes shall each be 32.0 mm in diameter. The IIRs shall be placed between each cylinder throttle body and its corresponding inlet port. The CRB may require adjustments to the restrictors at any time by publication in Fastrack.

C. All engine internals and compression ratio must remain stock. The competitor must present, on demand, an original factory manual for the engine to allow compliance verification. There shall be no modifications of any component of the engine unless specifically authorized in these rules.

D. The stock ECU shall be used. The ECU fuel and ignition map may be changed. Devices that modify inputs to or outputs from the ECU (e.g., Power Commander) may be used. Stand-alone after market ECUs are not permitted.

E. Turbochargers and superchargers are prohibited.

F. Carburetion or fuel injection may be used. Fuel injection, if used, must be stock and unmodified for the model and year of the engine that is used.

G. The exhaust system and exhaust manifold are unrestricted, within SCCA safety regulations, except that stepped exhaust headers are not allowed.

H. The lubrication system is unrestricted. Any oil pan and/or baffling are permitted and the use of dry sumps, Accusumps or similar oiling assist systems are permitted.

I. Oil coolers are unrestricted.

J. The cooling system is unrestricted.-

K. Replacement of the stock camshaft chain tensioner with any other chain tensioner is permitted. The replacement chain tensioner must attach directly to the engine in the original chain tensioner position. There shall be no modifications to the engine to enable the use of the replacement chain tensioner.

L. Replacement of the standard connecting rod fasteners with alternate fasteners is permitted as long as there are no modifications to the production connecting rods Replacement of other nuts, bolts, fasteners, and washers with common hardware items performing only the same fastening/fitting functions also is permitted as long as there are no

modifications to the production parts being assembled or to the production assembly.

M. The engine head gasket must be the thickness of the OEM gasket for the year and model of the engine.

N. Camshafts and camshaft drive mechanisms may not be modified or adjusted in any way unless specifically authorized in these rules.

O. Self-starter: Cars shall be equipped with an on-board self-starter and an on-board power supply controlled by the driver while in a normal driving position.

K.15. Chain Guards

Protective guards made from 1/8" aluminum or 3/32" steel are required where chain breakage could result in injury to the driver or damage to items necessary for the safe operation of the vehicle. This includes, but is not limited to, fuel lines, fuel tanks, brake lines, radiator, and water hoses.

GRAND TOURING

GT2

1. #6452 (Charlie Cook) Relax chassis restrictions - Panoz GTS

Cars must be prepared to Panoz Esperante GTS specifications and competitors must have a copy of the current GTS rules in their possession. Wheels: (F) 18x10 (R) 18x11. Track (F) 64.0 (R) 67.8. Any tire with a diameter of 17" or 18" may be used provided the tire does not exceed a maximum cross section width of 11.5" in the front and 12.5" in the rear; *or may use conventional GT2 tires and wheels per GTCS 9.1.2.F.4.c.10.* Internal modification to stock Penske 7500 shocks is permitted. Shock seals are not required. *Brakes are unrestricted. Front and rear anti-roll bars are unrestricted.*

SUGGESTED RULES FOR 2013

The following subjects will be referred to the Board of Directors for approval. Address all comments, both for and against, to the Club Racing Board. It is the BoD's policy to withhold voting on a rules change until there has been input from the membership on the presented rules. Member input is suggested and encouraged. Please send your comments via the form at http://www.crbscca.com/ or www.clubracingboard.com . Please send a separate comment letter on each subject.

GCR

None

FORMULA

1. #6514 (Mike Quadrini) cylinder sleeves

Add the following new section: *9.1.1.E.14.K The following after market replacement cylinder sleeves manufactured by Los Angeles Sleeve of Santa Fe Springs, CA are for the Rotax 493 and 494 respectively: Rotax 493: FL-1286 (69.5mm) Rotax 494: FL-1224 (69.5mm) Note: the appearance of the port is machined as opposed to the as-cast port of the OEM sleeve and the sleeves are machined to size after installation in the cylinder casting.*

GRAND TOURING

None

SUPER TOURING

None

IMPROVED TOURING

None

PRODUCTION

None

AMERICAN SEDAN

None

SHOWROOM STOCK

None

SPEC MIATA

None

SPORTS RACING

None

TOURING

T1

1. #7075 (CRB) Part of 6797 that is rule change request

Add to spec line for BMW E92 M3 (08-09) BMW M3 GTS (2010), Max Wheel Size (inch): *F: 19X11 R: 19X11*

CAR RECLASSIFICATIONS

PRODUCTION

FP

1. #6939 (Inness Eisele) Classify BOTH the E30 and E36 318's in FP

Reclassify the BMW 318is (1991) now in EP to FP with the only change in specs being weight- 2350, 2409 and 2468.

WHAT DO YOU THINK?

GT

Over the last several years, the GT Advisory Committee (GTAC) has been classifying cars in specific engine displacement ranges and architecture styles. Such a range might be 1.6L to 1.8L and architectures considered are number of valves in the head, cross flow vs. non-cross flow, etc. We believe that this approach provided necessary consistency as we leveled the playing field with SIRs and weights across the classes. This approach also provided a sense of reassurance to competitors that most configurations would be treated uniformly and that there was some science behind the tiers of SIRs and weights. This was particularly important as many of the competitors were climbing the SIR development curve and we wanted to avoid chasing a moving target. This also has meant that when one or more tiers have been adjusted, a lot of cars have been affected.

The GTAC believes that the SIR development curve has begun to plateau and we are receiving data points from competitors that suggest that lower level, "precision" adjustments are likely needed to further equalize the classes. The GTAC collects a significant amount of data confidentially from many competitors. As a result, we know of multiple highly developed engines in a specific range (same SIR and weight) that are producing significantly different power outputs. In some cases this may be based on bore and stroke ratios, but that is not always the case. Other factors include specific nuances of head designs and other factors not easily quantifiable.

The downside of employing "precision" adjustments is that there necessarily would be subjectivity introduced into adjusting competition potential. We cannot quantify every available architecture for efficiency, nor each one's response to an SIR size change. The upside is that when we need to adjust a specific SIR and weight combination due to a specific package in a range either under or over performance, we would not need to adjust all the motors in that range and risk creating new over dogs or incurring other unintended consequences. This "precision" approach would be more like that used in the Production classes for adjustments.

To be clear, what this means is that if the committee perceived that there is a car or engine in the class that is materially outperforming or underperforming the other cars or like engines in the class, we would make an adjustment to just that car to improve class balance. This would be a subjective assessment, but it would be based on available data. We recognize that a shift in approach like this could lead to less stability. However, since the adjustments would be more specific than they are today, the "instability" would be felt by fewer participants overall. At the same time, the current SIR and weight assignments would form the base for future adjustments. It is anticipated that most current assignments would not change.

The GTAC is seeking member input on breaking away from the current, more calculated approach and making competition adjustments based on things like overall performance, bore/stroke, potential aero advantage/disadvantage, and other factors. If adopted, the new approach would be pursued to its logical conclusions; in some cases it could be seen as "rewards weight" that has been noted as "unfriendly" by competitors in the past.

Please indicate whether you would support individual competition adjustments or would support a continuation of current practices? Please send your responses as soon as possible and include your rationale and a brief statement regarding your specific effort and your experiences with respect to class parity in the current rule set.

MEMBER ADVISORIES

None

NOT APPROVED BY THE CRB

GCR

None

FORMULA

None

GRAND TOURING

GT3

1. #6782 (Jim Valdez) Reduce weight on the BMW 2.3 DOHC engine cars by 65lbs.
Thank you for your input, please see What Do You Think item above.

SUPER TOURING
None

IMPROVED TOURING
1. #6503 (Mark Andy) Allow alternate shift linkage bushings
Thank you for your input, the rule is adequate as written.

ITA
1. #6683 (David Montgomery) Re-evaluate 240SX weight using 25% power increase
Thank you for your input. The CRB has determined that the vehicle's weight is correct.

ITB
1. #6617 (Michael Giacoma) Replacement of Automatic Choke With Manual Choke
Thank you for your input. The IT rules do not allow replacement of an automatic choke with a manual choke.

ITR
1. #6578 (Dale LaGasse) Classify 1982 El Camino for ITR
Thank you for your input. Since this vehicle was not manufactured with a manual transmission, it cannot be classified to run in Improved Touring.

PRODUCTION
1. (Multiple, 17 letters) Re-instate G Production.
Thank you for your input. The loss of GP left a gap in the performance levels of the production classes and some competitors left the production classes when GP cars were reclassified. At the time the decision to reclassify cars in GP was made, the BoD had taken the position that based on participation numbers, GP would not be a class at the Runoffs. It was the belief of the Production Advisory Committee that this decision would effectively destroy GP as a National class. This is the reason all GP cars were reclassified to FP or HP. The question now posed is could we successfully bring back GP?

Production racing participation is excellent at present. EP is fifth in participation numbers nationally in 2011 while FP is seventh and HP is fourteenth. Before GP cars were reclassified, GP was in serious difficulty. Between 2003 and 2007 the number of cars at the Runoffs in GP dropped from 34 to 16. Nationwide GP showed a similar drop. There is no reason to believe reinstating GP (with the same cars and specifications that existed in 2007) would create a healthy class.

Moving GP cars into HP has been a significant help to HP. It is true that at the longer/faster tracks the old GP cars have an advantage. However, at most tracks, the original HP cars remain competitive. The loss of former GP competitors to production is not solely a function of the elimination of GP. If we compare who was racing seven years ago to who is racing today in any class, there is significant change.

In EP we have been classing larger displacement cars with the hope they will become popular, allowing that group to be separated out as a new production class. We will try this same approach in all classes. The CRB understands that the greater the disparity in specifications between cars in any class, the more difficult it is to create parity in the class. However absent a reason to believe a new GP will have strong participation numbers, recreating GP serves no purpose. This is particularly true in light of the mandate of the BoD to the Competition Board to actively manage/consolidate existing classes to insure the classes that remain are well subscribed.

EP
1. #6792 (Dave Kavitski) Revoke CRB#6236 MX5 / RX8 Weight Reductions.
If the cars in EP are slowed materially the gap between EP and FP times will be eliminated. Thus slowing down EP is not an appropriate solution. The limited spread of times at the front of the EP field and the diversity of cars in this group reveals a competitive class. This is not to say that all cars in the class are competitive and this is the reason for the adjustments to the RX-8 and MX-5. These cars were brought in at conservative starting weights and based on further analysis of these cars and other cars in class, the reductions were deemed proper. The issue you indentify of straight line speed vs. cornering speed impacts all the production classes. For example, in EP the Runoffs pole car did not have the top trap speed. Unless we can populate each of the classes with cars that are essentially identical as to engine size, suspension design, etc., some cars will make their times based more on straight line speed and others on cornering speed.

HP
1. #6796 (Gary Johnson) Reduce weight of 948Sprite/Midget by 50lbs.
Thank you for your input. This car's weight is classified correctly.

AMERICAN SEDAN
None

SHOWROOM STOCK
SSC
1. #6923 (Clint deWitt) Keep 2003-05 BMW Z4 in SSB, and reduce weight
Thank you for your input. Data shows the car and its weight are classified correctly.

B-Spec
2. #7017 (CRB) Letter 6856 Response to Item #4 (roll cage modification)
Please refer to section 9.4 in the GCR. The modification you mention (structural epoxy stuffed into the A pillars/cage seam) is not allowed.

SPEC MIATA
1. #6050 (Tom Burdge) Tires
Thank you for your input. The SCCA SM Spec tire is required only in National Racing. Each region can choose to adopt the new tire or grandfather the old tire for regional racing.

SPORTS RACING
CSR
1. #6574 (Garry Crook) Turbocharging
Thank you for your input and especially your thoughts for reducing costs for competitive engines. The CRB has reviewed this request and does not recommend approval. The CRB is concerned about the cost of racing engines, however, the potential horsepower gains for the requested engine size using turbochargers in DSR and CSR would create a dominant car in both classes.

TOURING
1. #6890 (Bill Peter) Ban Hoosier "A" tires
Thank you for your input. The only specification we are able to monitor is the DOT certification. Various manufactures offer compounds and tire construction under that certification and we cannot regulate those variables.

PREVIOUSLY ADDRESSED
None

NO ACTION REQUIRED
GCR
1. #6703 (Pat Goolsbey) #6184/#6203 (Pat Goolsbey/Tony Sleath) Runoffs SRF qualifying
Thank you for your letter. It is the responsibility of drivers to be aware of speed differentials when more than one class is on the track for any session, not only at the Runoffs, but during the normal race weekends. Since it is impossible to run each class in its own race group, this will continue to be something with which the drivers will need to contend. The CRB is looking at all race groupings based on information gained at the 2011 Runoffs, including the race group you mention.

2. #6865 (Bill Seifert) STL as a National Class – Runoffs
Thank you for your input. Since STL is a new class for 2012, the CRB will monitor class participation in 2012 and will make decisions depending on national entries.

3. #6909 (Bob Coffin) RE letter 6430 update
Thank you for your letter. Every effort is made to make SCCA racing fair to all participants. Weights and restrictions on all cars are carefully considered. If you have a specific rule request, the CRB would be glad to consider it.

4. #6935 (Larry Dulude) Communication--Club Racing Memo
The current method is sufficient.

5. #6950 (William Smith) Modify cage rules for IT to ST crossover
Thank you for your input. See letter 6885 in Technical Bulletin.

FORMULA
FA
1. #6581 (Matt Miller) Please Keep Current Engine Table
Thank you for your input and support of this program. Engine performance will continue to be monitored and adjustments will be made as the conditions dictate. This is an ongoing process that works well and will continue in FA as well as other classes.

F5

1. (Multiple, 85 letters) F600 proposal
Thank you for your letters, please see letter 6901.

FF/FC
1. (Multiple, 22 letters) FF/FC rules change proposal
Thank you for your input.

GRAND TOURING
1. #6633 (Gary Johnson) roll cage/wing height
Thank you for your input. The CRB will monitor the situation and make a change if it becomes necessary.

GTL
1. #6631 (Gary Johnson) eliminate the 50lb penalty for RWD
Thank you for your input. The GTCS does not specify a 50 lb weight penalty for rear wheel drive cars.

2. #6632 (Gary Johnson) reduce weight
Please see letter #6012 in November 2011 Fastrack.

3. #6656 (Lans Stout) Letter 6172
The CRB is monitoring the performance between the unrestricted and restricted classifications and we do acknowledge that the gap may be closing. If the CRB feels competition adjustments need to be made, based on our monitoring, they will be made.

SUPER TOURING
STU
1. #6863 (Dave Maynard) ex Grand am specs for 2004 330ci
Thank you for your submission. In order to compete in ST, you should prepare your car to current ST rules.

IMPROVED TOURING
1. #6484 (Greg Amy) Aftermarket mounts.
Thank you for your input. Please see the 2012 GCR.

PRODUCTION
EP
1. #6793 (Dave Kavitski) Add 100 lbs weight to 99 Miata.
See response to letter 6792.

2. #6794 (Dave Kavitski) Add 75 lbs of weight to 71 Datsun 240Z.
See response to letter 6792.

3. #6795 (Dave Kavitski) Add 50 lbs of weight to 79-89 RX7.
See response to letter 6792.

4. #6798 (Dave Kavitski) Add 25 lbs to the 99 BMW Z3.
See response to letter 6792.

AMERICAN SEDAN
None

SHOWROOM STOCK
SSC
B-Spec
1. #6772 (Peter Schwartzott) B-SPEC car classification
Thank you for your input. The car fits the dimensions and is restricted accordingly. The CRB will continue to monitor the performance of the car.

2. #7016 (CRB) Letter 6856 Response to Items #2 (lower control arm bushings) and #3 (camber adjustment)
These are addressed in section 9.1.7.E.35 of the B-Spec rules.

3. #6800 (Steve Sanders) Allow Mazda 2 an alternate rear sway bar.
Based on the initial release of the B-Spec rule set (see 2012 GCR), the rear sway bar, Mazda part number 0000-04-2203-RR is part of the Mazda kit.

SPEC MIATA

1. (Multiple, 20 letters) .010 Overbore
Thank you for your input. Please see the November Fastrack, letter #5302. The rule change was approved by the Board of Directors for 2012 (see December 2011 Fastrack, page 26) and is in the 2012 GCR.

SPORTS RACING
None

TOURING
T2
1. #6741 (Richard Kulach) Publish the process for determining weight/restrictors.
The T-SS Committee has found that no simple "process" calculation is adequate to provide equality across the classes, as we have the most diverse types of car fields in the club. We have found that an approach that begins with power/torque to weight is a good starting point. From there a car's potential is characterized in both straight line performance (engine curves, gear ratios, final drive, aero drag, etc) and cornering performance (suspension type, cg height, springs, bars, tire size, etc). If the need exists, dynamometer testing and lap time simulations may be used to assess a new car that is placed in a class, or a car that has been adjusted with a restrictor. Finally, track performance, including data acquisition, is used as the final feedback to maintain equity in each class.

2. #6748 (Marty Grand) Correct Evo X MR weight
Please refer to letter 6927 in Technical Bulletin

3. #6871 (William Moore) Club Racing Technical Bulletin TB 11-12 November 20, 2011 - Solstice
The 2012 GCR has clarified that an SIR was intended for the Solstice, rather than a flat plate restrictor. The CRB has data that shows this will help the car. The CRB will continue to monitor its performance.

4. #6928 (CJ Moses) Allow Hood Pins in SS and Touring classes
Hood pins are permitted. See GCR 9.1.10.D.10.g.

RESUMES
1. #6559 (Geno Petersen) Resume for Geno Petersen
Thank you for your resume. It will be kept on file for future openings on the Formula/Sports Racing Committee.

2. #6482 (CRB) Resume for F/SR Advisory Committee
Bruce Lindstrand has been appointed to the Formula/Sports Racing Committee.

3. #6281 (Bill Johnson) F/SR Committee
Bill Johnson has been appointed to the Formula/Sports Racing Advisory Committee.

4. #6241 (Marc Cefalo) Spec Miata Advisory Committee
Thank you for your resume. It will be kept on file for future openings on the Spec Miata Advisory Committee.

CLUB RACING TECHNICAL BULLETIN

DATE: January 20, 2012
NUMBER: TB 12-02
FROM: Club Racing Board
TO: Competitors, Stewards, and Scrutineers
SUBJECT: Errors and Omissions, Competition Adjustments, Clarifications, and Classifications

All changes are effective 2/1/12 unless otherwise noted.

GCR
None.

Formula
FB
1. #6258 (Club Racing Board) Bodywork rule omission
Add a new section, 9.1.1.H.3.i, as follows:
"There shall be no forward facing gaps or openings in the bodywork with the exception of those necessary for engine cooling, engine air inlet, shock, or brake cooling. All bodywork shall be firmly attached to the chassis."

F5
1. #6625 (Jack Walbran) F500 593 Rotax Engine Errors and Omissions
In section 9.1.1.E.14.A, make the following changes:
"Carburetors: The induction system is restricted to two (2) 38mm Mikuni VM 38 round slide carburetors (except AMW). No modifications are permitted to the carburetor bodies. The use of any jets or jet needles is permitted.

Carburetor mounting shall be of individual runners, no balance pipes, no plenums unless fitted as standard as on the 493 *and 593* engine. *38mm intake boots, BPP 48067860 or Kimpex 07-100-33, shall be used for the 493 and 593 engines.* Supercharging, turbocharging, and direct fuel injection are prohibited."

In section 9.1.1.E.14.G, make the following changes:
"Rotax 494, 493, *and 593* engines: Any Rotax 494, 493, *or 593*, respectively, model thermostat housing or water outlet elbow may be used. The water bypass may be blocked. Either upper or lower cylinder head water outlet may be blocked in any safe manner to facilitate use of a single water outlet."

Add a new section, 9.1.1.E.14.K, as follows:
"K. Rotax 593 engine only: Rotax OEM 0.010" overbore piston P/N 420889171 is permitted. Engines may be overbored as specified by Rotax so that this piston may be fitted.

FF
1. #6836 (John Grooms) Request for clarification on intake.
Add a new section, 9.1.1.D.3.k.2.a, as follows:
"*a. Air filters are unrestricted. All air entering the engine must pass through the air filter prior to entering the throttle body. No devices such as, but not limited to, air horn(s), trumpet(s), bell mouth(s), velocity stack(s), vortex generators and or turning vanes are permitted inside the air filter or between the air filter and the throttle body.*"

Grand Touring
1. #6931 (GT Committee) GT Floor pans
In section 9.1.2.F.4.b.2, clarify as follows:
"Chassis, frame, or subframe may be lightened, reinforced, or replaced, provided components and attachments are not relocated, except where specifically permitted. ~~Reinforcing does not authorize the use of belly~~ *Floor* pans *are only permitted behind* ~~forward of~~ the firewall *or the trailing edge of the front wheel opening, whichever one is furthest forward,* ~~or aft of~~ *and forward of* the front edge of the rear wheel opening. The floor behind the rear wheel opening shall be flat and follow, but not exceed, the line of the rear fender bottom. Only the fuel cell container may protrude or extend below this plane. *There shall be no pans, whether factory supplied or otherwise, between the spoiler pan and the floor pan nor between the floor pan and the floor behind the rear wheel opening.*"

In section 9.1.2.F.4.b.12, clarify the last sentence, as follows:
"~~The s~~*S*poiler "pan*s*" *are only permitted* ~~area~~ forward of the leading edge of the front wheel openings *and* shall be flat and follow, but not exceed, the line of the front fender/spoiler bottom."

GT3
1. #6648 (John Bauer) Correct the Acura B18B inlet specification.

Honda Engines, B18B, Change Fuel Induction as follows: "~~31mm SIR~~ *unrestricted*"

GTL

1. #6582 (Peter Zekert) Add Kia Rio & Kia Forte to GTL
In GTL, add Kia Rio as follows:

Model	Years	Body Style	Drive-line	Wheel-base (in)	Notes
Kia Rio& Forte	*2000-Present*	*2DR*	*RWD*	*97.0*	

2. #6583 (Peter Zekert) Allow 2010–present Hyundai Accent in GTL
In GTL, add the Hyundai Accent as follows:

Model	Years	Body Style	Drive-line	Wheel-base (in)	Notes
Hyundai Accent	*2010-Present*	*2DR*	*RWD*	*97.0*	*May use any class-legal Kia engine*

3. #6610 (Peter Zekert) Classify 1.6L Gamma DOHC engine
In GTL, add the following engine:

Engine Family	Engine Type	Bore x Stroke (mm)	Disp. (cc)	Head Type	Valves / Cyl.	Fuel Induction	Weight (lbs)	Notes
Kia Gamma	*DOHC*	*77.0 x 85.44*	*1591*	*Alum, Crossflow*	*4*	*23mm SIR*	*1950*	.

4. #6611 (Peter Zekert) Classify 1.8L DOHC 16V engine form Kia Sephia
In GTL, add the following engine:

Engine Family	Engine Type	Bore x Stroke (mm)	Disp. (cc)	Head Type	Valves / Cyl.	Fuel Induction	Weight (lbs)	Notes
BP	*DOHC*	*83mm x 85mm*	*1839*	*Alum, Crossflow*	*4*	*22.5 mm SIR*	*2270*	.

Improved Touring

1. #4330 (Charles O'Toole) reexamine heater core plumbing allowances.
Clarify section 9.1.3.D.3.g as follows: "Engine coolant fluid, coolant/heater hoses and clamps maybe substituted. Heater hoses may be plugged *or bypassed (looped) or removed*. Heater water control valve(s) may be added or substituted. Heater core ~~and hoses~~ shall not be removed."

Super Touring

1. #6885 (Greg Amy) Rollcage Rules, Super Touring
In section 9.1.4.B, add to the end of the first paragraph:
"*Cars modified beyond SS, SM or IT rules in any fashion must meet full ST safety requirements.*"

STO

1. #7002 (ST Committee) E&O Ford Mustang in Jan FasTrack
In STO, Ford 5.0L "Coyote" engine, change the Notes as follows:
""Boss" intake manifold ~~required~~ permitted."

STU

1. #6832 (Tom Bull) Response to #6567 Rob May change STU turbo wording
In section 9.1.4.2.I.2, rescind the following sentence:
"~~No turbocharged engines with more than 4 cylinders will be classified.~~"

Add a new section 9.1.4.2.I.3 as follows:
"*Turbocharged engines of greater than 2.7L displacement shall use the weight as listed in the lbs/cc or restrictor size/lbs charts, whichever is greater.*"

[Since the regs specifically state that we cannot classify a V6 turbo in STU, we **must** change that reg to be able to do that. Period. And, once we make that change, since we do not have an allowed engine table, the engine is by default allowed. Thus, once we've rescinded 9.1.4.2.I.2, *even if we classify this car/engine combo in Table A*, it does not preclude someone else from running the engine in another chassis. And, Table A is **additional** allowances, not **superceding** allowances (i.e., just because it appears in Table A does not mean it cannot be used as otherwise compliant to STU regs).]

2. #7003 (ST Committee) E&O Letter 6550

In section 9.1.4.2.I, Table A, combine the Lotus Elise SC and Lotus Exige SC on one line and change the Notes as follows:
"~~OEM~~ *Open pulley and injectors;* OEM camshaft lift *at 2400 lbs. Stock SC pulley, and injectors permitted at 2200 lbs.*"

Production
FP
1. #6810 (Barry Perkins) Reduce the weight of the MGB by 100lbs.
In FP, MGB & MGB-GT, change the weight as follows: ~~2000~~ *1950*

American Sedan
None.

Showroom Stock
None.

B-Spec
1. #6856 (Mike Ogren) Oversights.
Add a new section 9.1.7.E.1.39 as follows:
39. Fenders and wheel openings shall remain unmodified. It is permitted to roll under or flatten any interior lip on the wheel opening for tire clearance. Cars with plastic/composite fenders may remove any interior wheel opening lip, but the resulting material edge shall be no thinner than the basic fender material thickness. Non-metallic inner fender liners may be removed.

2. #6877 (Club Racing Board) Remove the 2-4 door designation from the Toyota Yaris.
In SSC, Toyota Yaris 2-4 door (07-12), remove ~~2-4 door~~.

3. #6878 (Club Racing Board) Remove the 4-5 door designation from the Nissan Versa.
In SSC, Nissan Versa 4-5 door (07-11), remove ~~4-5 door.~~

4. #6888 (Club Racing Board) Change language regarding eccentric bushings.
In section 9.1.7.34 change the third paragraph as follows: Maximum 2.5 degrees negative chamber on front and rear; MacPherson strut suspension may decamber wheels by the use of eccentric ~~bushings~~ *bolts (crash bolts)* at control arm pivot points, by the use of eccentric ~~bushings~~ *bolts (crash bolts)* at the strut-to-spindle, and/or by use of slotted adjusters at the top of the strut mounting plate.

Spec Miata
None.

Sports Racing
CSR
1. #6568 (Billy Waits) Update engine allowance rule for Élan DP02 in CSR
In 9.1.9 G.3, make the following changes:
"The only engine*s* permitted ~~is~~ *are* the Ford 2.3 liter Duratec *or Mazda 2.0 liter MZR* as supplied by Elan Power Products (EPP). No modifications are permitted. The engine must have the four (4) EPP numbered seals (cam cover, oil pan, front cover, crank angle sensor) present in their location and condition as installed by EPP."

2. #6821 (Club Racing Board) Correct omission
In section 9.1.9.A.2.a.5, make the following changes:
"~~Fuel injection is allowed on all engines up to 1615cc, up to 4-valves per cylinder unless otherwise specified.~~ Fuel injected engines shall use the same size venturis or restrictors as the specified carburetors."

Touring
T1
1. #6709 (Adam Vanda) Reduce the weight of C6/ LS2 motor by 200lbs
In T1, Chevrolet Corvette C6 Coupe (05-10 /Grand Sport (2010) change the *LS2* weight as follows: ~~3280~~ *3180*

T2
1. #6818 (Cheyne Daggett) Allow alternate brakes for the 11/12 Mustang.
In T2, Ford Mustang V6 (11-12), add to the Notes as follows:
"*14" Brembo Brake Kit #M-2300-S*"

2. #6913 (Cheyne Daggett) Weight Reduction or CAI
In T2, Ford Mustang V6 (11-12), change the weight as follows: "~~3575~~ *3500*"

3. #6927 (CJ Moses) Weight/Restrictor Adjustment EVO X

In T2, Mitsubishi Lancer Evo X / GSR / MR (08-11), change the Notes as follows:
"~~41 mm Turbo inlet restrictor required~~ *42 mm Turbo inlet restrictor required"*

Change the weights as follows: "~~3530~~ *3625 or* ~~3630~~ *3700* with paddle shifter"

T3
1. #6679 (Chad Gilsinger) Remove Inlet Restrictor from Honda S2000
In T3, Honda S2000 (00-09), change the Notes as follows:
"~~*54mm flat plate restrictor required.*~~ *58mm flat plate restrictor required.*"

In T3, Honda S2000 CR (08-09), change the Notes as follows:
"~~*54mm flat plate restrictor required.*~~ *58mm flat plate restrictor required.*"

In T3, Nissan 350Z Track/Touring/Standard/Nismo (03-08), change the weight as follows: ~~3400~~ *3375*

Spec MX-5
None.

TIME TRIALS

TIME TRIALS ADMINISTRATIVE COUNCIL | December 14, 2011

The Time Trials Administrative Council met by teleconference on December 14, 2011. Participating were Matt Rowe, Co-Chairman Chuck Deprow, Tony Machi, Co-Chairman, Bob Horansky, Bob Lybarger, Josh Hadler, Dave Deborde, Kent Carter, Jerry Cabe, Phil Creighton, Lisa Noble, and Joe Oliveira. Also participating was Deanna Flanagan, SCCA Club Racing Manager.

- Lisa Noble of the BoD addressed the TTAC and expressed the desire of the BoD to give the TTAC the tools needed to grow the entire Time Trials program.
- The TTAC and Liaisons present on the conference expressed their thanks to Matt Rowe for his service as TTAC Chair.
- 2012 Time Trials rules modifications were approved by the BoD in their entirety and have been published in Fastrack.
- Previously discussed changes in licensing allowing designees to appointed by the TTAC Representative/Program Manager to approve licenses will be submitted to the BoD for review at their next scheduled meeting.
- The wording submitted to the BoD regarding Time Trial credit towards Club Racing licensing to be included in the GCR was approved basically as it was submitted.
- Standardization of Safety Steward training was discussed. Will evaluate the formats utilized in various Divisions and utilize input from the TTSC to move forward.
- The TTAC and Liaisons reviewed the input that was solicited from the membership regarding the possibility of modifying the current passing rules for Level 3 events. The input received was primarily from the Southeast Division, with almost all of the input voicing support for not modifying the current rules structure for passing in Level 3. There was also input that reflected that drivers would appreciate other drivers monitoring their mirrors more appropriately to assure safe passes. There was additional discussion that Club Racing drivers participating in Time Trials sessions must remember to still abide by the passing rules that are in place for that Time Trials session.

RULES / DOCUMENTS:

- MOTION: Machi/Oliveira. To leave the passing rules in their current format for all levels of Time Trials, and to review these current passing rules in an attempt to clarify any ambiguities that may be present without changing the intent. PASSED - Unanimously

SOLO EVENTS BOARD

SOLO EVENTS BOARD | Dec. 28, 2011

The Solo Events Board met by conference call December 28th. Attending were SEB members Dave Feighner, Bryan Nemy, Steve Hudson, Mike Simanyi, Erik Strelnieks, Richard Holden, and Dave Hardy; Doug Gill and Brian Harmer of the National Staff; BOD members Brian McCarthy John Walsh. These minutes are presented in topical order rather than the order discussed.

Unless noted otherwise the effective date for all rule, class, and listing change proposals herein is 1/1/*2013*

Comments regarding items published herein should be directed via the website www.sebscca.com.

GENERAL

- The SEB thanks Art Trier for his service to the National Appeals Committee (NAC)
- Marcus Meredith has been appointed by the SEB to the NAC.
- The Site Committee is being reactivated, and will be available as a resource to Regions and Divisions for assistance with site acquisition issues.

STOCK

- The SAC and SEB have reviewed the following items, and thank these members for their input:
  - #5009, Fiat 500
  - #6499, camber allowances
  - #6626, 6627, Excluded cars in SS comments.

STREET TOURING

- The STAC is submitting the following rule change proposals for member comment:
  - Replace 14.10.J with the following (#4128, 4837, 6431):

    "Any engine or transmission mount is allowed provided it attaches only to the original mounting points, does not relocate the engine/transmission (other than incidental to changes in compliance material), and weighs no less than the OE mount. All components between the engine/transmission and the mounting structure are considered to be part of the mount assembly."

    Also remove 14.8.E and re-letter subsequent sections accordingly.

    Comment: The existing allowance attempts to retain bushing compliance through an ineffective restriction on metal content. Mounts of a solid nature can still be legally fashioned from hard plastic (e.g. Delrin). The proposed allowance replaces that ineffective restriction with one that instead limits weight reduction benefits.

  - Add a new second sentence to 14.10.A as follows (#6776):

    "Oil pump pickups may be relocated within the OE pan."

    Comment: This provides additional flexibility in maximizing use of allowed baffling to increase reliability under hard cornering.

STREET PREPARED

- The SPAC is submitting for member comment the following rule change proposal:
  - Change 15.10.J to read as follows (#6403):

    "Engine *and transmission* mounts may be replaced, but must attach in the factory location(s) without *any additional modifications*. Engine position may not be changed. Hydraulic shock type rear engine locators, or bobble struts, may be replaced by manufacturer's performance part or aftermarket replacement part. This part must retain factory dimensions and attachment points, including factory design. (Example: If factory locator/bobble strut is gas or hydraulic piston type, replacement part must be gas or hydraulic piston type.) If one or more non-OE engine *or transmission* mounts are used, 15.10.K does not apply and a torque suppression device may not be used."

    Additionally, delete 15.10.N.

- The SPAC and SEB have reviewed the following items, and thank these members for their input:
  - #6347, timing covers
  - #6485, SSP comments

STREET MODIFIED

- The SMAC has a vacancy at this time, and members interested in serving on this committee are invited to submit their qualifications in writing to the SEB.
- The SMAC and SEB have reviewed the following items, and thank these members for their input:
  - #6521, SM weights. The SMAC is not currently proposing raising weights across the board.

PREPARED

- Per the PAC, the following rule change proposals are submitted for member review and comment:
  - Change the maximum wheel diameter/width specification for all full preparation car listings in Appendix A for G Prepared to *16x10*. Comment: The intent of this proposal is to provide a moderate competitive adjustment for full-prep GP cars, by allowing wheels up to 10 inches in width with no weight penalty. (#4144, 6166, 6670)
  - Add the following to 17.10 (#4597):

    "T. Traction control/stability control may not be added to a car which was not equipped with an OEM traction/stability control system. OEM systems may be retained, but may not be replaced or modified in any way other than deletion."

    Comment: The intent of this proposal is to explicitly ban non-OEM traction/stability control systems in Prepared classes, unless specifically authorized in Appendix A.
  - Revise the 6th paragraph of Appendix A for CP to read as follows (#5249):

    "Similar configuration is defined as having the same number and arrangement (e.g., V, Straight, Flat, etc.) of cylinders and camshafts (e.g. Dual Overhead). Displacement changes are allowed. Alternate engines for a particular model must locate the bell housing to the block mounting surface in the same plane as the standard part. *Alternate material (aluminum) engine blocks may be used on U.S. produced 8-cyl engines. Any alternate engine block shall meet all other requirements of Section 17.*"

    Comment: The intent of this proposal is to allow aluminum engine blocks in CP, even if the original engine wasn't available with an aluminum block from the factory.
  - Revise the 4th paragraph of Appendix A.1.c. for XP to read as follows (#5551, 5582, 5612):

    "Wing endplate surface area is limited to 200 square inches each and the number of endplates is limited to a maximum of two. Convertibles/roadsters with no roof and targas with no rear window, no portion of the wing may be higher than 12 inches above the wing's point of attachment to the body of the vehicle. *In the event that a convertible/roadster with no roof or a targa with no rear window retains the original equipment windshield frame with a windshield of any material that meets 17.2.K.1, the top of the windshield frame shall be considered top of the roofline and the car may use the wing mounting rules in Appendix A.1.c for a closed car."*

    Comment: The intent of this proposal is to increase the allowable wing height for open cars with full windshields.
  - Change the Appendix A listing for the Toyota Starlet in EP to read as follows .(#5858):

    Starlet (non-turbo, 2WD) (1981-1984)

    Alt Engine: 4A-G (1.6L) with cyl. head P/N 11101-16010, or 11101-16030

    Comment: The proposed change eliminates a potential engine/cylinder head configuration that was not available in RWD Toyotas
  - Add the following subsection to Appendix A, Section 9 for X Prepared. (#6764):

    "c. Regardless of the Minimum Weight Calculations above, no car shall weigh less than the following Minimum Weights:

    RWD: 1,600 lbs

    FWD: 1,500 lbs

    AWD: 1,700 lbs"

    Comment: The intent of this proposal is to establish minimum weights that limit the potential for a vehicle significantly lighter than cars currently competing in XP to upset the competitive balance of the class
- The PAC and SEB have reviewed the following items, and thank these members for their input:
  - #6167, power steering. This subject was addressed by the Limited Prep rules reorganization, which has been implemented for 2012.
  - #6191, XP weight formula proposal

- #6200, XP rules comments
- #6246, Limited Prep rules comments
- #6247, Jetta Diesel classing

MODIFIED

- The SEB thanks Chuck Voboril and Gary Milligan for their service as members of the MAC.
- Clemens Burger has been appointed by the SEB to the MAC.
- The MAC and SEB have reviewed the following item, and thank this member for his input:
  - #6622, FSAE and AM. This issue has been covered by a recent Tech Bulletin (re: #6168) and is the subject of an additional future proposal which is being finalized by the MAC.

KART

- The SEB thanks Brian Garfield, Vernon Head, and Alan Sheidler for their service to the club as members of the KAC.
- The following rule change proposals have been submitted by the KAC and is provided here for member review:
  - Change 19.1.D.1.d to read as follows (#6377):

    "d. *Case*, Cylinder, and Cylinder head*: The engine case may be modified internally to alter the path of induction (porting) or match to induction ports in the cylinder.* The cylinder and/or head, including ports, power valves, and castings, may be modified or machined subject to the requirements of section 10.1.D.1.e. Water inlets and/or outlets may be modified for aftermarket fittings and/or hoses. Adding or deleting cylinder ports or re-sleeving *of the cylinder* is not allowed."

  - Add to 19.1.d.1.i, immediately after "…or aftermarket parts" as follows (#6378):

    "*The transmission parts may be polished to facilitate shifting*"

NOT RECOMMENDED

General

- #6075, prohibit course recording. There is no practical means by which such a ban could be effectively enforced.

Stock

- #6523, camber allowances. Allowing camber plates would not be consistent with Stock category philosophy.
- #6585, Chevrolet Sonic classing. This model does not meet the provisions of Section 3.1 relating to rollover risk, as it does not have a published SSF rating and its average track width is smaller than its overall height.
- #6599, Genesis item in Appendix F. This model-specific item is no longer necessary, now that the general rule covering the subject modification has been changed to address the issue.
- #6785, 6786, S2000 CR classing. The SAC believes this car is consistent with the current competitive landscape in BS.
- $6842, Mini Countryman classing. This model does not meet the provisions of Section 3.1 relating to rollover risk, as it does not have a published SSF rating and its average track width is smaller than its overall height.

Street Touring

- #3890, transmission coolers. The STAC believes that current fluid allowances are sufficient for Solo event usage.
- #4103, M3 in STR. This model does not currently fit within the classing philosophy of STR.
- #4285, NSX classing. The STAC believes this car's potential exceeds the limits of current ST classes.
- #4654, 6867, Toyo exclusion. This change is not considered necessary at this time. The issue will be examined further in the future.
- #6588, steering wheel replacement. Airbag replacements for the subject model continue to be available from the OEM.
- #6722, ECU programming. The ECU allowances in ST were recently revised, and the STAC does not feel additional changes are appropriate at this time.
- #6870, BMW E30 move to STC. Per the STAC, there are existing E30 325's running in STX that already have aftermarket differentials. This change would be a significant takeback (requiring limited-slip removal) in order to move the car to STC, negatively affecting some competitors. It is not believed that this would provide significant competitive relief.
- #6902, Audi TTRS classing. The STAC believes this car's performance potential is beyond the limits of current ST classes.

Street Prepared

- #6124, '84-'87 CRX/Civic move to FSP. The SPAC does not believe this car is a good fit for FSP.

- #6581, move 370Z. The SPAC wishes to assess the impacts of the recent SP class reorganization before making further adjustments to the classes.

Street Modified

- #6520, SM weights. Per the SMAC, at this time the available data does not suggest that AWD cars cannot be competitive within the current rules.

Prepared

- #5728, 6137, 6282, 6727, XP wheelbase and width. The PAC is concerned that wheelbase and/or width restrictions would jeopardize XP's status as the catch-all class for Prepared. However, the PAC will be submitting one or more alternative proposals to address the issues raised by this member, while still allowing Prepared-legal vehicles to compete in XP.
- #5843, Civic/CRX listing. The proposed mix of model generations is not consistent with the general classing philosophy.

Kart

- #6397, KM gear ratio change proposal. The Rotax-powered kart has the ability to run 10-inch or 11-inch diameter drive tires, giving options for gearing. The KAC and SEB do not view the requested change as being consistent with class philosophy.

TECH BULLETINS

Stock

1. Per the SAC, the following new listings are effective immediately upon publication (#6904):

   HS 2012 Mini Cooper Coupe
   DS 2012 Mini Cooper S Coupe
   DS 2012 Mini Cooper S JCW Coupe

Street Touring

2. Per the STAC, the following clarification items are provided (#3634, 4679):

   Add a new last sentence to 14.2.F.1 as follows: "'Model' is defined in 12.3."
   Add to Appendix F under STREET TOURING CATEGORY CLARIFICATIONS:
   "*BMW 3-SERIES LISTINGS*
   For the purposes of 14.2.F.1, all BMW 3-series within a generation (E30, E36, E46, etc.) are considered the same model, including "M" versions."

3. Per the STAC, the following new listings are effective immediately upon publication:

   STX 1990-1996 Nissan 300ZX, non-turbo (#3733)
   STC 2003-2008 Hyundai Tiburon V6 (#6784)
   STX 2008-2012 BMW 128i (#6879, 6887, 6896)
   Comment: This model is currently allowed in this class via the catch-all listing. Adding the specific classification merely makes it eligible for National competition.

4. Per the STAC, clarify 14.9.A by adding the following new last sentence (#6723):

   Battery allowances do not apply to electric and hybrid-electric vehicles.

Street Prepared

5. Per the SPAC, the following new listing is effective immediately upon publication (#6300):

   DSP Peugeot 505 (all) (1979-1991)

Street Modified

6. Per the SMAC, interior panels are any surface on the inside of the car, whether they be plastic or metal. Care should be taken to minimize modification to perform the fuel cell install. The driver's compartment definition is covered in Section 12.8. (#6313)

Prepared

7. Per the PAC, the Appendix A listing in GP Limited Prep for the VW Golf is corrected to read as follows (#5377):

   "Golf *(non-turbo)* (GTI,GT,GL) 15x7 1.57/1.30 58.8/58.2
   1780cc 1780
   Fuel Inj
   Comp ratio to 11.5:1, valve lift to 0.420 in."
   Comment: The only change to this listing is the addition of the phrase (*non-turbo*), to clarify that later Golf turbo models with similar displacement are not eligible for GP.

8. Per the PAC, the following new listing in GP (full prep) is effective immediately upon publication (#5422, 6716):

   "***Datsun***
   SPL 310-U 1488cc 1550 14x7 1.65/1.26 51.5/50.7
   (2) Hitachi HJB-38W
   SPL 311 / 311-U 1595cc 1700 14x7 1.66-1.69/1.26-1.38 53.7/50.7
   (2) Hitachi HJB-38W-3 or (2) SU HS-4 1.5"

9. Per the PAC, the A1 chassis VW listing in EP is corrected to read as follows (#5529):

   Rabbit, Jetta, Scirocco, Cabriolet, & Pickup (8V A1 Chassis) (1975-92)

   Comment: This revision corrects the range of model year dates to include all years the A1 chassis VW's were produced.

10. Per the PAC, non-OE replacement bodies are allowable in XP for the Factory Five Roadster, Factory Five Challenge Car and Superformance MKIII. Replacement bodies must be dimensionally similar to the OE part, and must be of similar construction, including material, thickness and weight. (#6120, 6791)

<u>Karts</u>

11. Junior: Per the KAC, the intent of the Junior B rules for the Briggs and Stratton Raptor motor is to follow section 701 in the WKA Rulebook for the Briggs and Stratton Stock Raptor 5hp Engine. Members can contact the Tech Services Department for additional information (#6077).

12. KM: Per the KAC, 19.1.D.1.i is being clarified to read as follows:

    "i Transmission*: OE cases must be used. Transmission gear sets are exchangeable within a manufacturer's engine series as an update/backdate allowance. This does not allow substitution of gears with those from another manufacturer or aftermarket parts.* Shifter mechanisms must be manually operated, no air or electric assisted shifters are allowed."

RALLYCROSS BOARD

RALLYCROSS BOARD MINUTES | January 4, 2012

The RallyCross Board (RXB) met via conference call January 4. Attending were Ken Cashion, Chairman, Bob Ricker, Brent Blakely, Karl Sealander, Warren Elliott, Stephen Hyatt and Ron Foley. Also in attendance were Todd Butler and Stephen Harris, BOD liaisons, and Howard Duncan and Brian Harmer from the National office.

The Secretary acknowledges that these minutes may not be in chronological order.

Committee Reports

1. RallyCross Safety Committee: Per Brent Blakely no new incidents have been reported since the last RXB meeting.

2. RallyCross Rules Committee (Warren Elliott): Forum discussions are ongoing regarding interpretation of the new rule for radiator replacements in the Prepared categories. Warren Elliott will start a forum discussion regarding the possibility of adding experimental Tuner categories. Mike Byington will be added as a member to the Rules Committee.

3. National Championship Committee (Ken Cashion): Ken Cashion discussed his letter to the Divisional Stewards requesting input on proposed changes to the series. Some of the stewards have responded, but at the time of this meeting most have not. The RXB hopes to avoid having Regional and Divisional events scheduled on or too closely to National events.

4. Divisional Steward Liaison (Stephen Hyatt): Brent Carlson, Central Division Steward, has tendered his resignation. He and the RXB are actively seeking a replacement.

5. Forum Activity: Some rules discussions, as noted in the Rules Committee report.

Old Business

1. Growth discussion:
   a. Regional Program Development Assistance (Stephen Hyatt): Brent Blakely will work to create a RallyCross event promotional packet for event organizers.

   b. Rules Evolvement for Relevance and Accessibility (Warren Elliott): Exploring the possibility of adding RallySprint events, with corresponding rules package, for 2013.

   c. Marketing and Communications Plan (Ron Foley): Few schedules have been posted to date. Action item: Bryan Tippens to contact Divisional RallyCross Stewards to request and encourage schedules, both Divisionally and Regionally, for web publishing.

   d. National Program Enhancements (Ken Cashion): None.

2. National Convention:
   a. Seminars: Q&A for Novices (All); RallyCross Town Hall (Ken Cashion, Warren Elliott (rules)); RallyCross Schools Best Practices (Ron Foley); RE's – RallyCross Issues, Needs & Best Practices; RXB closed session with Divisional RallyCross Stewards; RXB closed session.

   b. Awards: Recipients were selected and voted on by the RXB for the annual RallyCross awards to be presented at the 2012 National Convention—Regional Achievement Award, Divisional Achievement Award, and Dirty Cup.

   c. Attendance: All RXB members will be attending.

New Business

1. Detroit sanction: Approval granted for January 8 event. Bryan Tippens to be the primary safety steward.

2. Divisional Stewards: The RXB discussed the roles and responsibilities of the Divisional RallyCross Stewards. Grooming successors should be encouraged; perhaps having an assistant steward is a good idea.

3. Committee Composition: Ken Cashion requested that in the next few months that committee recruitment come from the membership at large and that there be only one RXB member per committee.

Next meeting: February 1, 2012

Submitted by Karl Sealander, RXB Secretary

ROAD RALLY BOARD

ROAD RALLY BOARD MINUTES | January 3, 2012

The *RoadRally* Board (RRB) met via conference call on Tuesday, January 3, 2012.

Attending were: Chairman, Jim Wakemen; members: Jeanne English, Sasha Lanz, Chuck Hanson, Clarence Westberg and Rich Bireta; Deena Rowland and Howard Duncan, National Office; Bob Lybarger and Steve Harris, Board of Director Liaisons. Not in attendance: Eva Ames.

Proceedings

1. **December, 2011, RRB minutes** approved (Hanson/English).

2. **Rally Liaison updates**

Rally changes and Liaison updates are in **red** below.

2012 Rallies / Liaisons:
Desert Skies, NT, AZ Border, March 10 - English
Desert Sands, NC, AZ Border, March 11 - English
The National Road, NT/NC/NGTA, Indianapolis, June 23 - English
The International Road, NT/NC/NGTA, Indianapolis, June 24 - English
CAST in Stone, NT, Detroit, July 28?
Western Virginia Natl Tour, NT, Steel Cities, Aug 25-26 - Bireta
Oktoberally, NC/RC, LOL, Sept 15 - Westberg
Badger Trails, NC, LOL, Sept 16 - Westberg
Catoctin Monte, NT/RT, WDC, Oct 6 – Wakemen
Lobster Traps, NC/NGTA, WDC, Oct 7 - Wakemen
Yucatan Safari, LOL, Dec 8

Yucatan Safari past – waiting for a write-up for SCCA website, or can send 'bullet-point' format to Reece White at SCCA for updating to web.

There was discussion about the upcoming National rallies in Arizona, and what we can do to help make them better. (Details in the RRB Dropbox.) English will contact John Sears.

Sanctions for the June Indianapolis Nationals will be submitted soon.

The August Steel Cities' rally is a two-day event being written by Bruce Gezon.

3. **2012 USRRC**: Decision not final yet, we hope to be able to announce officially at/after our February meeting. Whoever hosts the USRRC, the RRB wants to help – what can we do to help them? Publicity before? Hospitality? Things to do in host city? We do not want to impose ourselves on them, but want to help with what they need in order to make this a successful weekend.

4. **Convention 2012**

We have determined the Road Rally Region and Division awards winners. Deena has Gervais and best Tour Rally winners.

Tentative Road Rally sessions for the Convention: Fri – cost containment, RRB meeting Saturday - town hall, RR safety steward; meeting with BOD - Thurs morning?, Thurs afternoon?; Saturday - time for each program to talk to REs, best practices, needs, perspectives from us and them, intro to what program is. Final schedule to be set by Topeka.

5. **Rally News Items**

How to get old items off of the SCCA Website and get new items on? Best answer, submit new things to replace the old. In addition, Howard thinks the website has been updated so that staff can remove old items.

6. **Concerns Tracker –** tabled until next month

7. **Experienced Based Classes –** tabled until next month

8. **APP Class –** tabled until next month

9. **Photo Contest**

Jim has talked to Rick Beattie, he will send us a formal proposal; we want to keep rally profile higher, it's hard to promote this contest outside of SCCA/rally community; we have a budget for awards; is there an FTP file where Rick can upload files, so judges can get them easily? Is there space on the SCCA website for this? Rick will look for a photo for the cover of the RRRs.

10. Membership Changes – tabled until next month

11. Newsletter Report – tabled until next month

12. Forum Issues
The RRB is trying to actively respond to items/issues posted on the SCCA Forum. Some RRB members were surprised that there was no reaction to the posting about Pego's position (Rally/Solo Manager) being brought back 'in-house' to Topeka and Pego being let go as an outside contractor.

13. Old Business
Tiered SCCA membership – there is a meeting next week in Topeka about this; Howard will keep us updated.

2012 RRB meeting conference calls have been approved for the first Tuesday of the month.

14. New Business – tabled until next month

Next meeting – Tuesday, February 7, 2012 at 7:30 pm CST, via conference call.

by Jeanne English, RRB Secretary.

QUICK LINKS

The following items have been removed from regular inclusion in FasTrack News and can be found on SCCA's Web site at the following links:

CLUB RACING

Accredited Driver Licensing Schools: http://www.scca.com/clubracing/content.cfm?cid=50864
Forms: http://www.scca.com/downloads/#club
Technical Forms: http://www.scca.com/clubracing/content.cfm?cid=44472
General Competition Rules (GCR): http://www.scca.com/clubracing/content.cfm?cid=44472

SOLO

Forms: http://www.scca.com/downloads/#solo
Rulebook: http://www.scca.com/downloads/#solo

RALLY

Forms: http://www.scca.com/downloads/
Rulebooks: http://www.scca.com/downloads/

SCCA NATIONAL CONVENTION

Event page: http://www.scca.com/events/index.cfm?eid=3263

EVENT CALENDAR: http://www.scca.com/events/

Fastrack news
official SCCA member notification
EFFECTIVE FIRST DAY OF THE MONTH UNLESS OTHERWISE NOTED March 2012

CONTENTS

BOARD OF DIRECTORS	**NONE**
CLUB RACING	**1**
CRB Minutes	1
Technical Bulletin	8
Court of Appeals	14
Time Trials Admin. Council	15
SOLO	**16**
SEB Minutes	16
RALLY	**19**
RallyCross	19
RoadRally	21
LINKS	**23**

CLUB RACING BOARD

CLUB RACING BOARD MINUTES | February 7, 2012

The Club Racing Board met by teleconference on February 7, 2012. Participating were Jim Wheeler, Chairman; Chris Albin, Fred Clark, Jim Drago, Peter Keane, Tom Start, Mirl Swan, and Pam Richardson, secretary. Also participating were: Todd Butler and Richard Patullo, BoD liaisons; Terry Ozment, Vice President of Club Racing; Doug Gill, General Manager, Technical Services Department; John Bauer, Technical Services Manager Club Racing; and Ryan Miles, Assistant Manager, Technical Services. Bob Dowie participated at the request of the Chairman. The following decisions were made:

SUGGESTED RULES FOR 2013

The following subjects will be referred to the Board of Directors for approval. Address all comments, both for and against, to the Club Racing Board. It is the BoD's policy to withhold voting on a rules change until there has been input from the membership on the presented rules. Member input is suggested and encouraged. Please send your comments via the form at http://www.crbscca.com/ or www.clubracingboard.com . Please send a separate comment letter on each subject.

GCR

None

FORMULA

None

GRAND TOURING

None

SUPER TOURING

ST

1. #7071 (Greg Amy) Definition of Rotary Engine Displacement

Please add definition of Rotary Piston Engines as new rule, 9.1.4.G.21: 21. *Rotary Piston Engines: Cars with rotary piston engines by the NSU-Wankel patents shall be classified on the basis of a piston displacement equivalent to twice the volume determined by the difference between the maximum and minimum capacity of a single working chamber times the number of rotors per engine (e.g., the Mazda 13B is classified as a 2.6L engine).*

2. #7086 (ST Committee) Clarify engine coolant

Remove 9.1.4.I.3: 3. ~~No line containing engine coolant may pass through the cockpit. No hydraulic fluid lines may have removable connectors inside the cockpit.~~

Change 9.1.4.I.4: 4. All fluid hoses, lines, reservoirs, and tanks that are in the cockpit, or cargo area that is open to the driver *(excluding heater core/defroster installations)*, shall be separated from the driver by rigid metallic and/or non-metallic enclosures and/or deflection shields to prevent fluid from spraying on the driver in case of a leak. *It is highly recommended that heater core/defroster installations also be shielded from the driver.*

IMPROVED TOURING

None

PRODUCTION

FP

1. #7408 (Club Racing Board) Recommended Rule Change Portion of Letter #7153

In FP, Volkswagen Golf III (93-98), change the notes as follows: Comp. Ratio limited to ~~10.5:1~~ *12.0:1.* Valve lift limited to ~~.450~~ *.500*".

AMERICAN SEDAN
AS
1. #6145 (Jack Martin) slotted camber plates

Thank you for your input. The CRB recommends the following changes to 9.1.6.D.4.d:

d. Suspension Mounting Points

1. Cars ~~equipped with strut suspension~~ may adjust camber by the use of eccentric bushings at *the lower* control arm pivot points, by the use of eccentric bushings at the ~~strut to bearing carrier joint~~ *upper suspension control mounting points,* and/or by use of slotted adjusting plates at the ~~top~~ *upper suspension* mounting point. If slotted plates are used, they shall be located on existing chassis structure. Material may be added or removed from the ~~top of the strut tower~~ *upper suspension mounting point* to facilitate installation of adjuster plate.

2. ~~On other forms of suspension, camber adjustments may be achieved by the use of shims and/or eccentric bushings.~~ Rear camber shall be no more than 1/2 degree negative per side.

3. All forms of suspension may adjust caster by means of shims or eccentric bushings. ~~Additionally, MacPherson strut equipped cars may~~ *All cars may* adjust caster at the upper ~~strut~~ *suspension* mounting point/plate.

SHOWROOM STOCK
None

SPEC MIATA
None

SPORTS RACING
None

TOURING
T2
1. #7059 (Brian Bates) Brake upgrade request E92 M3

Thank you for your letter. To improve safety, please add to the Spec Line Notes for the BMW E92 M3 (08-12): *Brembo Front brake kit #1N2.8505A and Rear brake kit #2P2.8033A allowed with a 50 lb. weight penalty.*

CAR RECLASSIFICATIONS
FP
1. #7152 (Chuck Mathis) Move EP 16v Golf to FP

Thank you for your letter. Re-classify the EP Volkswagen Golf GTI (87-89) to FP with the weights going from 1950, 1999, and 2048 to *2050, 2101, and 2152*. Also, Comp. Ratio limited to ~~10.0:1~~ *11.0:1*, Valve lift limited to ~~.330"~~ *.450"*.

WHAT DO YOU THINK?
None

MEMBER ADVISORIES
GENERAL INFORMATION

The following individuals have been appointed to be specialty advisors in 2012 for operational aspects of Club Racing:

Guy Ruse	Driver Licensing Advisor
Ed Zebrowski	Chief Driving Instructor Advisor
Dr. James Butler	Medical Advisor
Ann Hefty	Flagging and Communications Advisor (for workers seeking international participation)
Carla Heath	Timing and Scoring Advisor
Wanda Cecil	Registration Advisor

NOT APPROVED BY THE CRB
GCR
None

FORMULA
F
1. #6977 (Craig Conner) Independent Live Suspension using OEM Spindle, Hubs & Half Shafts

Thank you for your request and thoughts on how to reduce costs for F600. The goal of the rules for F600 is to remain as aligned with F5 as possible; therefore, the CRB has no plans to implement your request.

GRAND TOURING
None

SUPER TOURING
STL
1. #5751 (Brandon Lewis) alternate turbocharger
Thank you for your input.

2. #6839 (Christopher Childs) Allow aftermarket ITB's on M42 engine
Thank you for your input. Non-US engines are not currently compliant.

3. #6875 (Club Racing Board) RWD
Thank you for your letter. The CRB will continue to monitor performance and make adjustments as needed.

4. #6876 (Club Racing Board) FWD Strut car
Thank you for your letter. The CRB will continue to monitor performance and make adjustments as needed.

5. #6998 (Matthew Kessler) Clarification Request, Rear Deck Spoilers
Thank you for your letter. Rear deck spoilers are not compliant in Super Touring per GCR 9.1.4.D.2.

6. #7123 (Jim Remy) Consideration for Alternate Spec Line for STL
Thank you for your letter. Turbochargers are not compliant in STL. You have the option to build your car to STU specifications, or change to a non-turbo engine that is compliant in STL.

STO
1. #7025 (Alex Long) Reduce weight of BMW E36 M3 3.0 to 2400lbs
Thank you for your letter. The car's weight is classified correctly.

2. #7284 (Jerry Onks) Equalize LS7 Vette to Viper
Thank you for your request. The CRB will continue to monitor the performance of STO cars and make adjustments as needed.

3. #7373 (Joel Lipperini) Shelby CSX Cobra / Daytona Coupe (1985 +)
Thank you for your request. This car does not fall within the ST class philosophy because it is not a production-based car.

STU
1. #6602 (Christopher Childs) Adjust the turbo scale
Thank you for your letter. At this time, the CRB has no plans to make changes, but will keep your suggestion for future consideration.

2. #6944 (Ron Pawley) Lexus IS300 2.8L Weight Reduction
Thank you for your letter. You may build the car to current STU specifications if you feel the car in WC trim is at a disadvantage.

3. #7038 (Alex Long) Reduce weight of M3 to 2900lbs
Thank you for your letter. The car's weight is classified correctly for its performance potential.

4. #7040 (Alex Long) Allow 6 piston brakes
Thank you for your letter. The performance potential for 6 piston calipers is outside current class philosophy and there are no plans to expand that philosophy to include 6 piston calipers.

IMPROVED TOURING
None

PRODUCTION
FP
1. #6712 (Charles Coker) Increase Porsche 356 engine displacement to 2.0 L
Thank you for your letter. As manufactured, this car was never fitted with the proposed engine. This engine substitution is inconsistent with the class philosophy.

2. #6984 (Brent Louzon) Camshaft adjustment BMW 2002/Tii M10
The performance of this car will be monitored to determine the effect of recent adjustments.

HP

1. #6634 (Gary Johnson) Alternate intake/carbs.

The rules allow the specified carbs to be mounted on a fabricated manifold. There is no indication this rule does not permit the car to be successfully campaigned.

2. #7091 (Mark Brakke) Adjust lbs/cc for newer H Production cars

Thank you for your letter. There are sufficient differences between the listed cars to warrant the different weight to displacement percentages. For example, the 2007 Mini has a higher compression ratio and larger brakes than the 2002 Mini. The competitor is encouraged to bring the car out and campaign it so its on-track performance can be judged and, if necessary, the CRB will make adjustments based on actual performance data.

AMERICAN SEDAN

AS

1. #5071 (Rob Bodle) Class Mustang FR500C for AS

Thank you for your input. This car is classified in STO for 2012. The CRB will monitor its performance during 2012 to determine if it would be appropriate to classify it in American Sedan.

SHOWROOM STOCK

B-Spec

1. #6937 (Bradley Davis) Height Allowance

Thank you for your letter. Manufacturers of the B-Spec cars are using adjustable collars to achieve this. There is a large cross section of cars in the category. The 6" height was chosen for the class average.

2. #7063 (Andrew Stallworth) Approval of aftermarket coilovers for the Sonic

All suspension kits must be released and approved before any alterations from stock components are compliant for competition. Currently, there are no kits specified for the Chevrolet Sonic. The CRB recommends contacting GM racing as they are considering development of a B-Spec kit for the Sonic. Changes to the kit may be requested at a later time, but will go through the CRB process and will be considered like any rule change to the class.

3. #7068 (Andrew Stallworth) Removing restrictor plate requirements from all cars

Thank you for your input. The CRB will monitor this class throughout 2012 and beyond and will make adjustments as needed to best equalize the performance of all cars.

4. #7070 (Andrew Stallworth) General Sway Bar rule instead of bars specified by car manufacturer

If a manufacturer submits a kit that is approved in B-Spec, then that kit must be used as specified. Sway bars may be approved on a case by case basis as part of the manufacturer's kit. Standardization across all cars of a given make is one of the ways to maintain low development costs and maintain parity in B-Spec. Please also see the response to letter #7063.

SSB

1. #6908 (Jeff Lawton) Equalizing the competitiveness of the MINI Cooper S

Thank you for your letter. The CRB agrees that the Mini could use some competition adjustments to increase its competitiveness in 2012; however, your suggestions are outside the current philosophy of SSB. As part of the Touring/SS consolidation for 2013, the CRB will consider adjustments for this car within the Touring philosophy.

SPEC MIATA

None

SPORTS RACING

None

TOURING

T

1. #6892 (Bill Peter) Drop limitation on Touring and other roll cages

Thank you for your input. Current class rules do not allow an unlimited type of roll cage in Touring classes; however, the CRB is considering increased roll cage preparation limits for 2013 for the faster Touring classes.

2. #7011 (Jim Tway) Allow alternate engine components to increase reliability

Thank you for your letter. The changes you request are not in the current philosophy of the Touring classes. The CRB is considering parts to improve durability/reliability for 2013.

3. #7286 (Cheyne Daggett) Fuel Cell Installation

Thank you for your request. Per GCR 9.1.10.D.1.c.3 ("The stock fuel tank may be replaced with a fuel cell that is designed to mount in the OEM fuel tank location or is specifically designed to mount in the spare tire well provided that it is not necessary to

modify any bodywork to accomplish the installation other than for the purposes of fastening the cell securely in place.”), you may install a fuel cell if it meets this rule. There are no plans to change this rule.

T2

1. #6945 (David Muramoto) Bodywork additions to spec line 350Z

Thank you for your letter. Your requests are not within the Touring class philosophy. The CRB has made adjustments to Touring 2 cars to better equalize their performance. See December 2011 Fastrack.

2. #6946 (David Muramoto) Suspension request for 03-08 Nissan 350Z

Thank you for your letter. The Touring classes and rules are in the process of restructure for 2013 in which adjustments for camber and caster are under consideration.

3. #7170 (Don Knowles) Post all DL1 and other data on the web for all to see.

Thank you for the feedback. DL1 data is used for competitive adjustments to maintain parity in classes, and could be unfairly used for an advantage if released. The CRB is considering a test case for release of data (for a different class) to determine the value of such a process.

T3

1. #6975 (David Jones) Nissan 350Z front control arm approval for legal camber

Thank you for your letter. Please see letter 6946. The products you suggested are under consideration for 2013.

PREVIOUSLY ADDRESSED

None

NO ACTION REQUIRED

GCR

1. #7235 (Chris Howard) Please clarify 9.3.6 “bodywork damage”

Thank you for your input. The GCR is clear on the condition of racecars and appearance is a protestable item.

FORMULA F

1. #7087 (Thomas Valet) Suspension of 2.5 Rule - Feedback regarding Formula classes

Thank you for your support and feedback. Please continue to follow Fastrack and decisions from the National Convention regarding this issue.

F5

1. #7116 (Jim Murphy) F600 ruleset wording correction

Thank you for catching this. The removal of the words “rigid suspension” has been completed in the following areas:

1. GCR, see letter 7097.
2. Letter 6901 (in the letter system)
3. On the Master Recommended Rule Changes (next update due on scca.com 2/20/2012)

2. #7097 (Chuck McAbee) Change wording in GCR - 9.1.1 E.1.

Thank you for identifying this issue. The wording “rigid-suspension” is being removed from E.1 Definition and since E.3 defines the suspension it is not needed in E.1: A class for single-seat, open-wheel, ~~rigid-suspension~~ race cars using snowmobile-derived engines and drive components. Specifications are restrictive in nature in order to emphasize driver ability rather than design.

3. #7102 (Thomas Manalio) Let’s do this; F600

Thank you for your support.

4. #7156 (S. Jay Novak) Request a longer wheelbase for F600 and F500 cars

Thank you for your input. Your position will be presented to the Board of Directors at the 2012 National Convention.

5. #7206 (David Vincent) Support for #6514

Thank you for your support of letter #6514, which permitted cylinder sleeves in F5.

6. #7210 (Thomas Manalio) 100% in favor of this proposal

Thank you for your support of the F600 proposal.

7. #7307 (Jack Walbran) Comment on #6514

Thank you for your support of letter #6514, which permitted cylinder sleeves in F5.

FV

1. #7190 (Bruce Fuchiwaki) Spec tires

Thank you for your input.

2. #7278 (Bruce Fuchiwaki) Minimum weight change
Thank you for your concern; however, there is no current request or plans for a FV weight change.

GRAND TOURING
GT2
1. #6934 (David McPherson) Rule Clarification - GTCS F.2
Yes, if you modify your stock configuration of semi-trailing arm to an independent suspension, it will incur the same penalty!

SUPER TOURING
ST
1. #6941 (Eric Heinrich) 9.1.4.A.F.1 (rear suspension) clarification request
Thank you for your question. The ST rules allow bushing replacement and replacement (aftermarket) control arms. The definition of "altered," for this application is movement of suspension pickup points.

2. #6959 (Eric Heinrich) Crossover cars - engine coolant lines language.
When vehicles are competing in Super Touring using allowed alternate category specifications (i.e., IT, SM, SM5) they must meet all specifications for their own alternate category, including any GCR safety requirements. If the vehicle deviates in any way from their alternate category specifications, they must meet all appropriate Super Touring regulations, including GCR safety requirements.

3. #7137 (Eric Heinrich) Move the S54 engine to STO
Thank you for your input. Per 9.1.2.D.1, only engines of 3200cc and less are allowed in STU. Since the BMW S54 is 3249cc, it is not eligible for STU. This engine is currently classified in STO in the E36 and E46 chassis.

STL
1. #7048 (Christopher Childs) Ban the use of the NSX, Esprit, and any other super car from STL
Thank you for your input.

STU
1. #7076 (Michael Franck) STU VTS Mazda 626
The requester believes the vehicle is currently compliant for STU, meeting all existing STU requirements. Therefore, it can be run in STU. If an appropriate VTS can be found for this car, a future request for World Challenge allowance could be made.

2. #7320 (Amir Haleem) Eligibility of twin turbo RX7 in STU
Thank you for your request. The FD3S generation RX-7 chassis is eligible in STU, however the engine is not. You may install the FC3S single turbo engine in the FD3S chassis using the proper TIR and it would be compliant.

IMPROVED TOURING
None

PRODUCTION
FP
1. #7045 (Richard Barlow) Racing Classes
Please see February 2012 Fastrack, the section "Not Approved by the CRB, Production," for the discussion of G Production.

HP
1. #6956 (William Campbell) H production parity
Thank you for your letter. Please see February 2012 Fastrack, the section "Not Approved by the CRB, Production," for the discussion of G Production.

2. #7181 (Bob Coffin) Please fact check historical references
Thank you for your input.

AMERICAN SEDAN
None

SHOWROOM STOCK
B-Spec
1. #7012 (Eric Heinrich) BMW Club Racing adopts B-Spec ruleset for Minis
Thank you for bringing this to our attention.

2. #7069 (Andrew Stallworth) Reduce the weight of the 2012 Chevy Sonic by 150lbs
See response to letter #7068.

3. #7279 (Lee Mathias) Eligible body style?
Thank you for your question. Both Ford Fiesta body styles are eligible for B-Spec.

SSB
1. #7207 (Lowell Huston) Removal of OEM restraint systems
Thank you for your letter. The CRB is working rules updates for all T-SS classes for 2013 which will address your request.

SSC
1. #7000 (G.W. "Jay" Puskenalis) Future elimination of SSB-SSC classes
Thank you for your letter. The CRB is planning a consolidation of all Touring and SS classes into Touring classes for 2013.

SPEC MIATA
None

SPORTS RACING
None

TOURING
T2
1. #7007 (Richard Kulach) 370Z weight and restrictor appeal.
Thank you for your letter. Please see letter #7365 (Tech Bulletin).

2. #7112 (Randy Tauro) Restrictor plate 370 Z
Thank you for your letter. Please see letter #7365 (Tech Bulletin).

3. #7117 (Cheyne Daggett) Drive Shaft Request Part Number and Specs T2 V6 Mustang
Thank you for your letter. Please see letter #6943 (Tech Bulletin).

4. #7138 (T-SS Committee) E&O 2001-2006 BMW M3
A review of letter 6396 (December 2011 Fastrack) indicates that indeed, there was no request for a weight reduction for the BMW E46 M3. T2 cars, in general, have recently undergone weight adjustments. The CRB will be monitoring all T2 cars for competitiveness based on those adjustments.

5. #7160 (Don Knowles) Review Sebring data and slow 996 and BMW
Thank you for your letter. Please see letter #7364 (Tech Bulletin).

6. #7301 (Matt Samojedny) Front brake kit for E92 M3
Thank you for your request. Please see letter #7059 (Tech Bulletin).

RESUMES
1. #7099 (GT Committee) GTAC resume
Tony Ave has been appointed to the Grand Touring Advisory Committee.

2. #6912 (Eric Heinrich) STAC Resume Submission
Eric Heinrich has been appointed to the Super Touring Advisory Committee.

CLUB RACING TECHNICAL BULLETIN

DATE: February 20, 2012
NUMBER: TB 12-03
FROM: Club Racing Board
TO: Competitors, Stewards, and Scrutineers
SUBJECT: Errors and Omissions, Competition Adjustments, Clarifications, and Classifications

All changes are effective 3/1/2012 unless otherwise noted.

GCR
None.

Formula/Sports Racer
None.

Grand Touring
GT

1. #6931 (GT Committee) GT Belly pans
Clarify section 9.1.2.F.4.b.2, as follows:

"Chassis, frame, or subframe may be lightened, reinforced, or replaced, provided components and attachments are not relocated, except where specifically permitted. Reinforcing does not authorize the use of belly pans forward of the firewall, or aft of the front edge of the rear wheel opening. ***There shall be no pans, whether factory supplied or otherwise, between the spoiler pan and the floor pan nor between the floor pan and the floor behind the rear wheel opening.*** The floor behind the rear wheel opening shall be flat and follow, but not exceed, the line of the rear fender bottom. Only the fuel cell container may protrude or extend below this plane."

In section 9.1.2.F.4.b.12, clarify the last sentence, as follows:

"~~The s~~*S*poiler "pan*s*" *are* ***only permitted*** ~~area~~ forward of the leading edge of the front wheel openings *and* shall be flat and follow, but not exceed, the line of the front fender/spoiler bottom."

GT2

1. #6699 (William Davis) Bore/Stroke request Sunfire/Ecotech
In GT2, Engines - Chevrolet: Add the GM EcoTec engine:

Engine Family	Engine Type	Bore x Stroke (mm)	Disp. (cc)	Head Type	Valves / Cyl.	Fuel Induction	Weight (lbs)	Notes
EcoTec	*DOHC*	*88.9 x 94.6*	*2349*	*Alum, Crossflow*	*4*		*2080*	.

2. #6880 (Club Racing Board) Specify where the 997 restrictor comes from.
In GT2, Engine - Porsche, 3598cc, change the notes as follows:
"996 and 997 Porsche Cup cars only. 997 Porsche Cup car must use 62mm *(max) ID X 90mm OD X .060" +-.005", mounted flush against throttle body intake flange and retained by stock bellows.* ~~flat plate restrictor~~; See Appendix F. Flat Plate Intake Restrictor, except last bullet. ~~Mount as supplied from Porsche.~~"

GT3

1. #7066 (Roger Welling) GTCS Correction/Clarification
In GT3, Nissan engines, change the spec line for the VG30 as follows:
valves/cyl. : ~~4~~ *2*
Fuel induction: ~~Automotive type sidedraft w/40mm choke(s) or 37mm SIR~~ *33mmSIR*
Weight: ~~2280 2230 w/37mm SIR~~ *2270*
Notes: ~~An SCCA approved F.I. kit of OEM origin is allowed. Contact the National Office for part numbers and specs.~~

GTL
1. #6982 (David Ligon) Add Toyota MR2 85-89 to GTL.
In GTL, Toyota cars, add a new classification as follows:

Model	Years	Body Style	Drive-line	Wheel-base (in)	Notes
MR2-MKI	*85-89*	*2DR*	*RWD*	*91.3*	*Hood bulge allowed*

Improved Touring
ITS
1. #6647 (Brad Barnhouse) classify 323 IS coupe E36

In ITS, classify the BMW 323is (E36) (1999) as follows:

ITS	Engine Type	Bore x Stroke(mm)/ Displ. (cc)	Valves IN & EX (mm)	Comp. Ratio	Wheel-base (inch)	Wheel Dia. (inch)	Gear Ratios	Brakes Std. (mm)	Weight (lbs)	Notes:
BMW 323 is (E36) (1999)	*6 Cyl DOHC*	*84.1 x 75.0 2494*	*(I) 33.0 (E) 30.5*	*10.5*	*106.3*	*16*	*4.23, 2.52, 1.66, 1.22, 1.00*	*(F) 286 Vented Disc (R) 276 Vented Disc*	*3000*	

Production
EP
1. #6957 (Judson Scott) Weight reduction for E Prod 944 S

In EP, Porsche 944S (87-88), change the weight as follows: ~~2700, 2768, 2730~~ *2600, *2665, **2730*

FP
1. #7153 (Chuck Mathis) Adjustment for VW Golf III

In FP, Volkswagen Golf III (93-98), Add to the notes as follows: "*Can use stock fuel tank if stock rear bumper and bumper support structure is retained.*"

2. #7280 (Prod Committee) Classify the VW Golf GTI 2 liter.
In FP, classify the Volkswagen Golf GTI (90-92) as follows:

FP	Prep. Level	Weight (lbs.)	Engine Type	Bore x Sroke mm.(in.)	Displ. cc./(ci)	Block Mat'l	Head/PN & Mat'l	Valves IN & EX mm/ (in.)	Carb. No. & Type	Wheelbase mm/(in.)	Track (F/R) mm/ (in.)
Volkswagen Golf GTI (90-92)	*2*	*2200 * 2255 ** 2310*	*4 Cyl. DOHC*	*82.5 X 92.8 (3.25X3.65)*	*1984 (121.05)*	*Iron*	*Alum*	*(I) 32.0 / (1.26) (E) 28.0/ (1.10)*	*Fuel injection*	*2472 (97.3)*	*60.5 / 60.2*

FP	Wheels (max)	Trans. Speeds	Brakes Std. (mm/ (in.))	Brakes Alt.: mm/(in.)	Notes:
Volkswagen Golf GTI (90-92)	15 x 7	5		Factory spec @ all 4 wheels.	Comp. Ratio limited to 10.0:1, Valve lift limited to .330". Can use stock fuel tank if stock rear bumper and bumper support structure is retained.

The remainder of this letter is addressed in letter #7408 in the Minutes.

HP
1. #7009 (Jason Isley) year listing oversight
In HP, Toyota Yaris (06-09), change the model years as follows: (06-~~09~~*11*)

2. #7084 (Bill Baker) Classify B-13 w/GA1.6DE engine Nissan Sentra in HP
In HP, classify the Nissan Sentra as follows:

HP	Prep. Level	Weight (lbs.)	Engine Type	Bore x Sroke mm.(in.)	Displ. cc./(ci)	Block Mat'l	Head/PN & Mat'l	Valves IN & EX mm/ (in.)	Carb. No. & Type	Wheelbase mm/(in.)	Track (F/R) mm/ (in.)
Nissan Sentre (1991-1994)	*2*	*2050 * 2101 ** 2153*	*4 cly dohc*	*76x88mm 2.99x3.47 in*	*1.597 cc*	*Iron*	*Aluminum*	*In 30mm 1.18 in Ex 24mm .95 in*	*Fuel injection*	*2413mm 95.7 in*	*F61.1 in 1552.1 mm R 60.1 in 1526 mm*

HP	Wheels (max)	Trans. Speeds	Brakes Std. (mm/ (in.))	Brakes Alt.: mm/(in.)	Notes:
Nissan Sentra (1991-1994)	*15x7*	*5*	*F 238mm 9.37 solid rotors R 180mm 7.08 in drum*		*Comp. ratio limited to 11.0:1, Valve lift limited to .400*

Super Touring
STO
1. #6536 (Jerry Onks) Approve new APR spoiler Z06 Corvette
In STO, Chevrolet Corvette, add to the chassis-specific notes: "*For Chevrolet Corvette Z06, carbon fiber lip, APR performance part number FA-208026 is permitted.*"

2. #6976 (David Jones) Clarify flat plate restrictor requirement
In STO, Dodge Viper, incl Comp Coupe, ACR/ACR-X, change the restrictors on the 7900 and 8000 cc engine spec lines as follows: 7990 ~~(2) 65mm flat plates~~ 8000 ~~(2) 65mm flat plates~~

3. #7351 (Marty Grand) Alternate Engine specs STO EVO
In STO, 2000cc Mitsubishi/DSM, add to notes as follows: "*4G63 block with MD346026 crank allowed resulting in 2324cc displacement allowed.*"

STU
1. #7163 (Club Racing Board) FWD Deduct
In section 9.1.4.2.I.3, change as follows: "Front wheel drive cars may reduce their minimum weight by ~~50 lbs~~ *2.5%*. Front wheel drive cars with a strut type front suspension may reduce their minimum weight by an additional ~~50 lbs~~ *2.5%*."

ST
1. #7310 (Philip Royle) removal of pop-up headlights in ST
In section 9.1.4.L.3, clarify as follows: "Standard headlights, *headlight operating ancillaries,* and parking light assemblies may be removed and replaced with a plate of identical shape and size of the lens. Standard headlight assemblies may be replaced with aftermarket units of equal dimension. *Vehicles with pop-up and/or hidden headlights may modify and/or remove the headlight assemblies as long as the headlight cover and any other external hardware are properly secured in the stock closed location.*"

STL
1. #6873 (Club Racing Board) Adust Multiplier.
Effective 3/30/12, in section 9.1.4.3.I.1, make the following changes to the weight table:

Factory Engine Displacement
(cc) Minimum Weight (lbs.)
Up to
1300 ~~1690~~ *1755*
1400 ~~1820~~ *1890*
1500 ~~1950~~ *2025*
1600 ~~2080~~ *2160*
1700 ~~2210~~ *2295*
1800 ~~2340~~ *2430*
1900 ~~2470~~ *2565*
2000 ~~2600~~ *2700*

The CRB is making these changes now rather than later, due to the newer chassis vehicles not being able to obtain the minimum weight (i.e. Civic, Mazda2-3, Mini, etc.). With it being early in the infancy of the class, these changes now enable cars under construction to plan accordingly.

2. #6874 (Club Racing Board) RX8
In section 9.1.4.A, clarify the fifth paragraph as follows: "Super Touring Light (STL) is a small-bore "tuner" class *for reciprocating piston engines of* displacements of 2.0 liters and under."

In seciton 9.1.4.B, clarify the third bullet point, second sentence as follows: "GCR listed IT cars *with reciprocating piston engines of* 2 liters and less engine displacement, 1985 and newer, may compete in STL under their current IT specifications."

In section 9.1.4.3.I.2, classify the Mazda Renesis engine by adding a sentence to the end of the section as follows: "The Mazda 12A is permitted at 2225 lbs. Mazda 13B is permitted at 2615 lbs; no porting is permitted in either engine. The 5th and 6th intake port actuators and valves may be removed or disabled. *The Mazda Renesis engine is permitted at 3000 lbs.*"

3. #7134 (Club Racing Board) Type R

In section 9.1.4.D.1, make the following changes:

The following vehicles in their entirety are ineligible for STL:

Honda S2000
~~Acura Type R~~
Lotus Elise/Exige
Lotus 2 eleven

The engines from the following cars are ineligible for STL:

Honda S2000 *F20C*
Acura Type R *Code B18C5*

American Sedan
None.

Spec Miata
None.

Touring/Showroom Stock
T1
1. #6797 (Brian Bates) Update the BMW E92 M3.
In T1, BMW E92 M3 (06-09), change the model years as follows: (06-~~09~~ *12*)

2. #7184 (Joe Aquilante) Correct GCR spec page
In T1, Corvette C6 Coupe (05-10) / Grand Sport, change the model year as follows: ~~(2010)~~ *(10-12)*

T2
1. #6623 (Brian Kleeman) Allow alternate driveshaft to address durability issues.
In T2, Ford Mustang GT (2011-2012) add to the notes as follows: "*Driveshaft from The Driveshaft Shop part number FDSH22-A-CV1 may be used with a 25 lb. weight penalty.*"

2. #6985 (Michael Heintzman) Errors and omissions
In T2, Mazdaspeed Miata (04-05) change the weight as follows: ~~2950~~ to *2480*
In T3, Mazdaspeed Miata (04-05) change the weight as follows: ~~2480~~ to *2950*

3. #7042 (Brian Bates) Differential Cooler E92 M3
In section 9.1.10.D.4.b, Add a new section 5 as follows: "*5. Any differential cooler(s) is permitted.*"

4. #7043 (Brian Bates) Emergency Brake E92 M3
In T2, BMW E92 M3 (08-12), add to the notes as follows: "*Entire parking brake assembly (including interior lever) may be removed.*"

In T1, BMW E92 M3 (08-09) BMW M3 GTS (2010), add to the notes as follows: "*Entire parking brake assembly (including interior lever) may be removed.*"

5. #7044 (Brian Bates) Shifter E92 M3
In T2, BMW E92 M3 (08-12), add to the notes as follows: "*Stock shifter knob may be modified or replaced to improve attachment retention.*"

6. #7222 (Club Racing Board) Correct BMW Z4 M Coupe Weight
In T2, BMW Z4 M Coupe (2007), change the weight as follows: ~~3475~~ *3375*. Change the notes as follows: "Euro manifold part #11 62 7 833 500 and 62 7 833 501 allowed. Turner springs permitted: front TMS600-10-250, rear TMS650-8-250; Ground control # MZ4Swaybar set *permitted with 100 lbs penalty.*"

7. #7362 (Club Racing Board) Change Weight
In T2, Chevrolet Camaro SS & Z-28 (98-02), change the weight as follows: ~~3530~~ *3575*

8. #7363 (Club Racing Board) Change weight on T2 Mustang GT
In T2, Ford Mustang GT 5.0L (11-12), change the weight as follows: ~~3750~~ *3675*

9. #7364 (Club Racing Board) Change weight on Porsche 996
In T2, Porsche 911 / 996 (98-05), change the weight as follows ~~3500~~ *3550*

10. #7365 (Club Racing Board) Change weight on Nissan 370-Z
In T2, Nissan 370Z (09-11) / 370Z NISMO Edition (09-11), change the weight as follows: ~~3550~~ *3475.*

11. #7367 (Club Racing Board) Change weight on Pontiac Solstice
In T2, Pontiac Solstice GXP Coupe/Convertible (07-09), change the weight as follows: ~~3175~~ *3150*

12. #7369 (Club Racing Board) Change weight on Pontiac Firebird Trans-Am
In T2, Pontiac Firebird Formula/Trans-Am WS-6 (98-02), change the weight as follows: ~~3530~~ *3575*

13. #7379 (T-SS Committee) Please correct the omission for moving the T3 Cobalt turbo up to T2.
In T2, Chevrolet Cobalt SS (08-09), change the spec line as follows:
Model Years (08-~~09~~ *10*)
Weight (lbs): ~~2850~~ *2900*
Max Wheel Size (inch) ~~18 X 9~~ *18 X 9.5*
Tire Size: ~~225/45~~ *255/50*
Notes: "~~38mm Turbo Inlet restrictor required. Front springs part #CCS635, rear springs # CCS639, front control arms # CCS636 and CCS637.~~ *Rear sway bar max 42 mm (body and suspension mounting same as OEM), add AEM cold-air intake (part #21-682C), GM Part #55206797 sensor allowed, max spring rate 500# (F) 700# (R), Front control arms # CCS636 and CCS637.*"

14. #6943 (Cheyne Daggett) Drive Shaft Replacement
In T2, Ford Mustang V6 (11-12), add to notes as follows: "*The Driveshaft Shop part number FDSH18-A allowed with a 25 lb. weight penalty.*"

15. #7185 (Joe Aquilante) Correct GCR for Pontiac T-2 Firebird
In T2, Chevrolet Camaro SS & Z28 (98-02) and Pontiac Firebird Formula/Trans-Am & WS-6 (98-02), replace the notes as follows: "Power steering cooler (option code V12) is permitted. ~~Factory optional oil cooler (P/N 52452158) and associated plumbing parts are permitted.~~ Front spring rate shall be 280-320 lbs. per inch and the minimum free length is 13 3/4 inches. Severn Canton accusump part # CA24024 or CA24006, along with Electric solenoid W/ epc # CA24273, Ac¬cusump Check Valve #CA2428, and Wheel to Wheel Adapter block # 0760-50001, and related hoses and mounting brackets are permitted. GM oil and diff coolers #12480080 allowed. Ron Davis Radiator 11-16CA0002 allowed. Z28 can use original hood. Strano Performance Camaro Track Package (Part #SP- 141, Spring Set (550# Front/150# Rear); Part #SP-8316. Front Sway Bar (1-3/8" or 35mm); Part #SP-8327, Rear Sway Bar (7/8" or 22mm); Part #UMI-2006, Strut Tower brace, 2 pt, 1.25" OD) permitted."

T3
1. #7105 (Brian Kleeman) Remove restrictors on the T3 350Z (VQ35DE motor only)
In T3, Nissan 350Z Track/Touring/Standard/Nismo (03-08), change the notes as follows: "Base model and "Rev Up" engines: ~~50 mm~~ *52 mm* flat plate restrictor required."

2. #6943 (Cheyne Daggett) Drive Shaft Replacement
In T3, Ford Mustang V6 (11-12), add to notes as follows: "*The Driveshaft Shop part number FDSH18-A allowed with a 25 lb. weight penalty.*"

SSB
1. #6889 (Club Racing Board) Protégé
In SSB, Classify the MazdaSpeed Protégé as follows:

SSB	Bore x Stroke(mm)/ Displ. (cc)	Wheel base (mm)	Track F & R (mm)	Wheel Size(in.)/ Mat'l.	Tire Size (stock)	Gear Ratios	Final Drive	Brakes (mm)	Weight (lbs)	Notes:
Mazdaspeed Protege (2003)	*83.0 X 92.0 1991 cc*	*2612*	*1453 / 1458*	*17 x 7*	*215/45/17*	*3.31, 1.84, 1.31, 0.97, 0.76*	*4.11*	*(F) 10.8-in. vented rotors, single-piston sliding calipers (R) 11.0-in. solid rotors, single-piston sliding calipers*	*3000*	*29mm turbo inlet restrictor required.*

2. #7403 (Club Racing Board) Celica GTS
In SSB, classify the Toyota Celica GTS as follows:

SSB	Bore x Stroke(mm)/ Displ. (cc)	Wheel base (mm)	Track F & R (mm)	Wheel Size(in.)/ Mat'l.	Tire Size (stock)	Gear Ratios	Final Drive	Brakes (mm)	Weight (lbs)	Notes:
Toyota Celica GTS (00-05)	*82.0 x 85.0 1796*	*2598*	*1488/ 1478*	*16 x 7 Alloy*	*205/50*	*3.17, 2.05, 1.48, 1.17, 0.92, 0.73*	*4.53*	*(F) 280 Vented (R) 262 Solid*	*2650*	*TRD Shocks/Springs Part #PTR11-20000-05 permitted. TRD Sway Bars Part #PTR06-20002-01 permitted. TRD Limited Slip Part #41301-ST804. ABS option allowed Canton Accusump #24-026, install sandwitch #24-700, valve #24-260, and related hoses and brackets allowed.*

SSC

1. #7107 (Mark McCaughey) Restrictor size proposal Celica GTS
In SSC, Toyota Celica GTS (00-05), change the spec lines as follows: Weight: ~~2985~~ *2925* Notes: "A ~~50 mm~~ *52 mm* flat plate restrictor is required."

2. #7121 (Mark McCaughey) Remove 00-05 Mitsubishi Eclipse GT(3.0L V6)
In SSC, Mitsubishi Eclipse GT (00-05), correct the bore X stroke/displacement as follows: ~~91.2 x 75.9 2972~~ *86.5 X 100, 2400*

COURT OF APPEALS

Quick Reference Guide - 2012 Court of Appeals
From: The SCCA National Court of Appeals

The SCCA General Competition Rules (GCR) provides a means for appealing a decision issued by the Stewards of the Meeting (SOM) at a SCCA Club Racing sanctioned event. Following is a brief guide to the Club Racing appeal process. For complete information please see GCR 8.4.

A. Right to Appeal -

1. Any participant or organization named as a party to a protest or Chief Steward's Request for Action, has the right to appeal a decision rendered by the SOM. GCR 8.4.1.

2. The Chief Steward may appeal any SOM decision. GCR 8.4.1.

B. Appeal -

1. Please state your case in writing specifying what decision is being appealed, and the sections of the GCR and/or Supplemental Regulations which are believed to have been administered inappropriately, unfairly, or inequitably. GCR 8.4.3.A.1. and 8.4.3.A.2.

2. Your letter of appeal must be sent to the SCCA Club Racing Office in Topeka postmarked within ten (10) days of the SOM decision. GCR 8.4.3.A.3.

3. **Exception:** Appeals affecting national points standings for events held **within 28 days** of the Runoffs© have a **48 hour appeal period**. GCR 8.4.8.

4. Your request must be accompanied by a fee of $175.00, payable to SCCA, Inc. A minimum of $100.00 of any appeal fee will be retained by the SCCA. Faxed or emailed Appeals must include a Visa or MasterCard account number for payment of the fee. GCR 8.4.3.A.4.

C. Evidence -

1. Your appeal request should include all arguments (why the SOM decision should be overturned), evidence, and information you want the COA to consider. Please note, the Court of Appeals will not routinely contact you for additional information. GCR 8.4.3.A.2.

2. If you include video evidence, please submit only unedited videos in a commonly available format that can be easily viewed by the Court.

D. Assistance - Your Divisional Executive Steward can supply information if you need help and guidance in filing an appeal. In addition, several Divisions have assigned Stewards to assist individuals with the appeals process.

January 2012

TIME TRIALS

TIME TRIALS ADMINISTRATIVE COUNCIL | January 11, 2012

The Time Trials Administrative Council met by teleconference on January 11, 2012. Participating were Chairman Tony Machi, BoD Liaisons Brian McCarthy and Dick Patullo, Steward Liaison Bob Horansky, Matt Rowe, Chuck Deprow, Dave Deborde, Jerry Cabe, Doug Gill, Roy Mallory, John Bauer, Craig Farr, and Joe Oliveira. Also participating was Deanna Flanagan, SCCA Club Racing Manager.

- John Bauer outlined use of new time trial letter log system and web site for the group.
- Both the TT Event and TT Participant of the year were selected. Awards will be presented at the national convention.
- TTAC Chairman (Tony Machi) sees Time Trials as the future of SCCA for growth and participation. TT needs more information in SportsCar about the events and the TT Schedules. There was discussion that TT lacks market penetration and more Regions need to be involved in hosting Time Trial events.
- TTSC Discussion – Currently only 4 Divisions are represented on the TTSC. Additional representation could be beneficial. The TTSC is in the process of formulating a standardized TT Safety Steward's Manual that may be used across the country.
- The group discussed the possibility of additional TTAC sessions at the National Convention. Possibilities discussed included a "Town Hall on TT" and "Future of SCCA – Time Trials."
- SCCA Calendar – The group discussed the possibility of having the Time Trials program included in the SCCA Calendar. The deadline for such inclusion would be in November at the latest.

SOLO EVENTS BOARD

SOLO EVENTS BOARD | Jan. 25, 2012

The Solo Events Board met by conference call January 25th. Attending were SEB members Dave Feighner, Bryan Nemy, Steve Hudson, Mike Simanyi, Erik Strelnieks, Richard Holden, and Dave Hardy; Doug Gill, Ryan Miles, and Brian Harmer of the National Staff; BOD members Brian McCarthy and John Walsh. These minutes are presented in topical order rather than the order discussed.

Unless noted otherwise the effective date for all rule, class, and listing change proposals herein is 1/1/*2013*

Comments regarding items published herein should be directed via the website www.sebscca.com.

STOCK

- The SAC and SEB have reviewed the following items, and thank these members for their input:
  - # 6629, SS excluded cars

STREET TOURING

- The following rule change proposal has been recommended by the STAC and is published here for member review and comment (#6776):
  - In 14.10.A, add a new second sentence as follows:

    "Oil pump pickups may be relocated within the OE pan."

    Note: This provides additional flexibility in maximizing use of allowed baffling to increase reliability under hard cornering.
- The STAC and SEB have reviewed the following items, and thank these members for their input:
  - #4837 and 6431, motor mounts

STREET PREPARED

- The SPAC has submitted the following proposed set of class listing changes, intended to increase the performance level of the FSP class. The resultant effects of this package are to move a selection of cars which are presently not competitive in DSP into FSP, to consolidate certain model variants, and to clarify and correct particular listings. (#6070, 6272, 6965, 7183, 7228):
  - Move the following listings from DSP to FSP:

Fiat & Bertone	X1/9 (all)
Toyota	Corolla FX16
Volkswagen	Corrado (all)

  - Modify specific FSP listings as follows:

    Current items:

    BMW
    - 318i (NOC)

    Chevrolet, Pontiac, Buick, Oldsmobile, Geo, & Suzuki
    - Storm (12v, base model) (1989-93)

    Ford
    - Focus SVT
    - Focus (NOC)

    Honda
    - Civic (non-Si) (1996-2000)

    Mazda
    - 323 (non-turbo)
    - Protégé (1989-98)
    - Protégé (1999-2003)

    Toyota
    - Corolla GTS (AE86) (1984-87)
    - Corolla GTS (AE92, FWD) (1990-91)

    Volkswagen
    - Rabbit, Jetta, Scirocco, Cabriolet, & Pickup (8v, A1 chassis) (1975-92)
    - Scirocco (16v)
    - Golf & Jetta (8v, A2 chassis) (1985-93)

Golf & Jetta (16v, A2 chassis)

Proposed items:

BMW

318i & 318is (E30 chassis)

318i, 318is (E36 chassis)

Chevrolet, Pontiac, Buick, Oldsmobile, Geo, & Suzuki

Storm *(all)*

Ford

Focus *(all) (1999-2007)*

Mazda

323 non-turbo *(1986-1989)*

323, Protege, MX-3 4 cyl. (1990-1994)

Protege *(1995-1998)*

Protégé (1999-2003)

Toyota

Corolla *GTS (all) (1984-1991)*

Volkswagen

Rabbit, Jetta, Scirocco, Cabriolet, & Pickup (*all,* A1 chassis) (1975-1992)

Golf & Jetta (*all*, A2 chassis)

Golf, Jetta *(VR6, A3 chassis)*

Golf, Jetta (*VR6 NOC, A4 chassis*).

STREET MODIFIED

- The SEB thanks Vic Sias for his work as a member of the SMAC.
- The SEB has appointed Brian Karwan to the SMAC.

PREPARED

- The PAC and SEB have reviewed the following items, and thank these members for their input:
  - #6288, 6728: XP wheelbase proposal

NOT RECOMMENDED

Stock

- #7026, Nissan Juke classing. Per the SAC, this car does not meet the provisions in Section 3.1 relating to rollover risk, as it does not have a published SSF rating and it's average track width is less than its overall height.

TECH BULLETINS

General

1. The European ECE 22-05 helmet standard is not considered to meet the requirements of 4.3.1, due to differences in testing program specifications (#6221).
2. With regard to 3.6.A, fuels marketed as "racing" are allowed if they are federally approved for highway use. A manufacturer's advertised claim of federal approval is considered sufficient (#7175).

Stock

3. The following new listings, effective immediately upon publication, have been recommended by the SAC and approved by the SEB:

Audi TT RS (2012)	SS (#6899)
Subaru Impreza 2.0i	HS (#7029)
Volkswagen Golf R (2012)	DS (#7095)

Street Touring

4. Per the STAC, with respect to 14.2.C, underbody and rocker panel trim pieces are not rub strips. (#4117)
5. The following new listings, effective immediately upon publication, have been recommended by the STAC and approved by the SEB:

Volkswagen Golf/Jetta TDI ('99-'06)	STF (#5386)
Nissan 200SX SE-R ('95-'98)	STC (#6444)
Nissan Sentra SE ('98-'99)	STC (#6444)
Nissan Sentra SE ('00-'01)	STC (#6444)

Street Prepared

6. The following new listings, effective immediately upon publication, have been recommended by the SPAC and approved by the SEB:

BMW M3 (2007-2012)	ASP (#6999, 7113)
BMW 128, 135, & 1 Series M (2008-2012)	ASP (#7114)

7. The Pontiac Solstice GXP and Saturn Sky Redline are listed in both ASP and BSP. They should only be listed in ASP.

8. Errors and Omissions: The Appendix F clarification under Street Prepared, titled "REAR VIEW MIRROR" should be deleted. This has been superseded by 15.2.Q.

Street Modified

9. Per the SMAC, a bolt-on subframe can be replaced as long as the replacement weighs at least as much as the original and does not alter suspension geometry. (#6740)

Prepared

10. Section 17.10. references 3.3.3.B.13 regarding restrictions on exhaust routing. The correct current reference is 3.3.3.B.15.

Formula Junior

11. Per the KAC, section 19.2 Formula Junior, A. Classes, 2. Junior B (JB), b. Engines, 4. Briggs & Stratton World Formula, items B. Restrictor and C. Weight should read:

    "B. Restrictor: A specific *throttle slide* restrictor must be installed in the *carburetor along with cap lock to limit throttle slide opening (0.420"). A Briggs and Stratton Junior B class check tool will be used during the installation to ensure the slide opening is consistent.* Contact SCCA Technical Services to obtain a restrictor *kit.*

    C. Weight: *265* lbs."

    Comment: For the World Formula motor, the Throttle Slide Restrictor is now allowed to replace the air intake restrictor for Junior B class at the National Tour/ProSolo/Nationals starting April 1st, 2012. The restrictor kit, which includes throttle restrictor pill, throttle opening check tool, and carb locking cap will be provided by Briggs and Stratton and are available immediately. Contact Brian Harmer at National office. There is an additional weight penalty of 10 lbs added to the current World Formula minimum weight for JB. The new minimum JB weight limit for World Formula engine powered kart is now 265 lbs. (#6189)

12. Per the KAC, in section 19.2 Formula Juniors, item C. Wheels and Tires, second sentence should read: "Maximum size for front tires is *4.60/10-5*." Comment: The current rule states 4.50/10-5 which is not offered in MG Reds, which is the Junior class spec tire. (#7125)

RALLYCROSS BOARD

RALLYCROSS BOARD MINUTES | February 1, 2012

The RallyCross Board (RXB) met via conference call February 1. Attending were Ken Cashion, Chairman, Bob Ricker, Brent Blakely, Karl Sealander, Warren Elliott, Stephen Hyatt and Ron Foley. Also in attendance were Stephen Harris, BOD liaison, and Howard Duncan and Brian Harmer from the National office.

The Secretary acknowledges that these minutes may not be in chronological order.

Old Business

1. Growth discussion—next steps:
   a. Regional Program Development Assistance (Stephen Hyatt): New England landowners' packet needs to be set up generically for all to use. One Divisional Steward planning to use financial assistance package to set up a new program at a Divisional training session in March.

   b. Rules Evolvement for Relevance and Accessibility (Warren Elliott): None.

   c. Marketing and Communications Plan—Pathways (Ron Foley): RallyCross needs to take ownership of its image on the website by efficiently controlling and being responsible for the content. Website content should be correct and kept up to date. The goal is to have a corps of content writers that can be assigned to write articles on specific topics. All content would be under the purview of Ron Foley with secondary approval from Ken Cashion. In addition, an electronic mailer similar to *SoloMatters* could be used to distribute articles more quickly than *SportsCar*, which has approximately a 90-day lead-time.

   d. National Program Enhancements (Ken Cashion): None.

2. National Convention (Preparation Assignment: Year in Review): In an effort to not let any important items slip through the cracks, Ken Cashion requested all RXB members review minutes from the past year and come to the Convention prepared to discuss the topics and progress over the last 12 months. This discussion will take place in the RXB closed session.

3. Committee Composition: Preferably there would be only one RXB member per committee, with the balance comprised of outside members. This would bring new people into leadership positions and deepen the RXB replacement pool. Bob Ricker will serve as the Safety Committee chairman. Cashion/Hyatt. Approved: all. Brent Blakely will step down from the Safety Committee but will attend meetings for a couple of months to provide continuity.

New Business

1. Recruitment, Division of Labor, Diversification, Buddy System: This includes the recruitment of involved and interested RallyCrossers, dividing responsibilities among all RXB members, involving more diversified outside membership, and the Buddy System which comprises of linking each Divisional Steward to an RXB member. Warren Elliott will be watching on forums and elsewhere for individuals to involve on committees and other projects. He will also work to pair each Divisional Steward to a RXB member in the Buddy System.

2. Detroit incident: Reported immediately. The Safety Committee will sort out the details.

3. Central Division Steward: Dustin Nevonen will be the new Central Division steward. Ricker/Cashion. Approved: all.

4. Court of Appeals: Stephen Hyatt to be chairman of the Court of Appeals. Cashion/Elliott. Approved: all. The other two Court of Appeals members, along with three alternates, will be set and voted on at the National Convention.

Committee Reports

1. RallyCross Safety Committee: The RXB discussed an incident that occurred at the recent Stafford, CT event. It appears to be an isolated incident. As the new Safety Committee chairman, Bob Ricker will be scheduling regular monthly meetings and others as needed. Bob Ricker plans to distribute an updated Safety Steward training program to the membership as soon as possible.

2. RallyCross Rules Committee (Warren Elliott): Some questions and discussion on the forums regarding revalving of shocks in Stock Category. One rules change proposal received regarding convenience items.

3. National Championship Committee (Ken Cashion): Ken Cashion would like to see three things on website in a prominent and different way, 1) schedule section that's fresh and usable, 2) rules timeline with a possible time-period countdown, and 3) RallyCross Rules readable online (done). Stephen Hyatt requested that Boards and Committees section include the Safety Committee, and perhaps access to the RXB and Committees by all users.

4. Divisional Steward Liaison (Stephen Hyatt): All but one Divisional Steward attended the last meeting. Jerry Doctor will put together a contact list. Online sanctioning is coming. Divisional scheduling is waiting Divisional meetings in some Divisions. Some questions remain regarding naming of Challenge events.

5. Forum Activity: Activity limited mostly to rules questions and discussions.

ROAD RALLY BOARD

ROAD RALLY BOARD MINUTES | January 3, 2012

Sports Car Club of America
***RoadRally* Board Minutes – Final**
Via Conference Ca
February 7, 2012

The *RoadRally* Board (RRB) met via conference call on February 7, 2012.

Attending were: Chairman, Jim Wakemen; members: Jeanne English, Chuck Hanson, Eva Ames, Sasha Lanz, Clarence Westberg and Rich Bireta; Deena Rowland and Howard Duncan, National Office; Bob Lybarger and Steve Harris, Board of Director Liaisons.

Chairman Wakemen called the meeting to order at 7:32 pm CST.

Proceedings
1. Jan, 2012, RRB minutes approved (Hanson/English).

2. Communications committee: Eva is chair. We need to keep track of things and respond with a united voice; each of us is free to respond as an individual, but when responding as the RRB we should be a single voice. For example, if there is an item on the forum asking for input and we want to respond, identify as an individual, then after we discuss at our meeting, we can respond as group. Keep personal opinions as personal opinions. Eva will organize our RRB response(s), then Jim as chairman will post.

3. Rally Liaison updates
Rally changes and Liaison updates are in **red** below.

2012 Rallies / Liaisons:
Desert Skies, NT, AZ Border, March 10 - English
Desert Sands, NC, AZ Border, March 11 - English
Steel Haul, NC, Steel Cities, June 2 - English
The National Road, NT/NC/NGTA, Indianapolis, June 23 - English
The International Road, NT/NC/NGTA, Indianapolis, June 24 - English
Western Virginia Natl Tour, NT, Steel Cities, Aug 25-26 - Bireta
Oktoberally, NC/RC, LOL, Sept 15 - Westberg
Badger Trails, **NT/RT**, LOL, Sept 16 - Westberg
Catoctin Monte, NT/RT, WDC, Oct 6 – Wakemen
Lobster Traps, NC/NGTA, WDC, Oct 7 - Wakemen
USRRC, October, Detroit 26-28 - Hanson
Yucatan Safari, LOL, Dec 8

4. USRRC: 2012 USRRC: Detroit region submitted a proposal for Oct 26-28. Move that we accept their proposal (Hanson/English); motion approved. Hanson is their liaison
2013 USRRC: Need proposals for 2013, so we can have it in the printed SCCA Calendar and in time to announce it at the 2012 USRRC; Howard Duncan will check how early we need info to be in the printed calendar.

5. Convention 2012
Do we need equipment such as projector? Yes. In addition, Jeanne needs Safety Steward CD; Deena will bring several to convention. Tentatively, the RRB will meet with the BOD on Thursday after lunch, 1:00 to 1:30. The RRB Annual Report will be part of Jeff Dahnert's presentation, Jim to get bullet points to Howard by Feb 20.

6. Concerns Tracker – Jim will talk to Colin at the convention re free space available on the SCCA Website. Jim has a new form specific for this – access Wakemen.dlinkddns.com/rt; Wakemen will send link for the RRB to access.

7. Experienced Based Classes – take DropBox version and post on SCCA Forum, but change "experience based" to "experience categories"; Jim will post it on the forum asking for input/comments. What about a novice running with a master? That issue is intentionally not addressed in the proposal, however we look forward to seeing whether it is addressed on the forum. Motion for Jim to post (Lanz/English); motion approved.

8. APP Class – propose this class to rally community, suggest they use it on regional rallies, let us know how it works – is it working? Is it accepted? Clarence is already using it on regionals and nationals, in class S. Motion to place Rich's proposal on

the Forum for comments, Jim will post to Forum (Hanson/English); motion approved.

9. Photo Contest - Jim/Rick needs space for this also, to accommodate full resolution pictures and control who has access (contest judges); Howard to check on this.

10. Membership Changes – Howard reported that the Tiered SCCA membership is still moving forward, still in planning stages, to be presented to BOD at convention.

11. Newsletter Report – Eva will work on getting out a Lead Car; Jeanne will work on getting out a RoadRally 'formerly known as ITIS' newsletter.

12. Forum Issues – see Item 2 Communications Committee above.

13. Old Business - Printing of RRR's, Deena will check on status. Still need NORPAC DRRS, English will contact some people about this.

14. New Business – SCCA Website – RoadRally forms becoming available as pdf or doc (as they were on 'old' website). Website – have "What can I do with my car?" show RoadRally as an option for everyone; Howard will talk to membership and web tech dept to add RoadRally and to make sure it is seen and not buried somewhere. RRB focus on regional events; we will talk with REs at the convention. Jim wants to do web-based scoring, for it to be a portal for date requests, sanctions, audits, scores; Deena says there is an online program developed by Colan in Member Services available for this (but not results), but not announced yet – coming soon. Jim will talk to Colan at the convention about this.

Next meeting – at the SCCA Convention, March 1-3, 2012.

The meeting was adjourned at 9:10 pm CST. (English/Lanz)

Submitted by Jeanne English, RRB Secretary.

QUICK LINKS

The following items have been removed from regular inclusion in FasTrack News and can be found on SCCA's Web site at the following links:

CLUB RACING

Accredited Driver Licensing Schools: http://www.scca.com/clubracing/content.cfm?cid=50864
Forms: http://www.scca.com/downloads/#club
Technical Forms: http://www.scca.com/clubracing/content.cfm?cid=44472
General Competition Rules (GCR): http://www.scca.com/clubracing/content.cfm?cid=44472

SOLO

Forms: http://www.scca.com/downloads/#solo
Rulebook: http://www.scca.com/downloads/#solo

RALLY

Forms: http://www.scca.com/downloads/
Rulebooks: http://www.scca.com/downloads/

SCCA NATIONAL CONVENTION

Event page: http://www.scca.com/events/index.cfm?eid=3263

EVENT CALENDAR: http://www.scca.com/events/

Fastrack® news
official SCCA member notification
EFFECTIVE FIRST DAY OF THE MONTH UNLESS OTHERWISE NOTED April 2012

CONTENTS

BOARD OF DIRECTORS	**1**
CLUB RACING	**11**
CRB Minutes	11
Technical Bulletin	17
Club Racing Runoffs Memo	19
Court of Appeals	None
Time Trials Admin. Council	None
SOLO	**20**
SEB Minutes	20
RALLY	**25**
RallyCross	25
RoadRally	27
LINKS	**29**

BOARD OF DIRECTORS

SCCA Board of Directors | Feb. 29 - March 4, 2012

The SCCA National Board of Directors met in Las Vegas Nevada on Wednesday, February 29 through Saturday, March 4, 2012. The following directors participated: Jerry Wannarka, Lisa Noble, Michael Lewis, Dick Patullo, John Walsh, Bill Kephart, Todd Butler, Bob Lybarger, Phil Creighton, R. David Jones, Robin Langlotz, Steve Harris and Brian McCarthy.

The following SCCA, Inc. staff participated in the meeting: Richard Ehret, Vice President Finance; Howard Duncan, Vice President Rally/Solo & Special Projects; Terry Ozment, Vice President Club Racing; Eric Prill, Vice President Marketing and Communications; Colan Arnold, Vice President Member & Region Services; Aimee Thoennes, Executive Assistant and Doug Gill, General Manager, Technical Services.

The secretary acknowledges that these minutes may not appear in chronological order and that all participants were not present for the entire meeting.

Motions not listing a breakdown of the voting are unanimous.

The meeting was called to order by Vice Chairman Noble.

> **MOTION** to approve December minutes: Lybarger/Langlotz. PASSED.

The meeting schedule of the Board of Directors was discussed. Final schedule agreed upon is June 1-2 , October 12-13 – both in Topeka, and November 30-December 2 in conjunction with the Performance Racing Industry Show in Orlando (Friday afternoon, all day Saturday, Sunday morning). The meeting in Orlando allows staff and board members to attend the PRI show in Orlando while setting aside time to conduct the business of the club.

> **MOTION** to approve the nomination of David Steger to the Solo Safety Committee replacing Bruce Bellom. Walsh/ McCarthy. PASSED.

Terry Ozment addressed the need to approve the recipient for the Tom McKean Award.

> **MOTION** to approve Lewis Cooper III as recipient of the Tom McKean Award. Kephart/Creighton. PASSED.

> **MOTION** to approve the re-appointment of Cary Agajanian, Philip Creighton, Michael Lewis and Bob Ruman to the SCCA Pro Racing Board. Lybarger/Patullo. PASSED.

Jerry gave informal resume of Penny Anderson. She has a strong background in fundraising which is a needed attribute for the Foundation Board.

> **MOTION** to approve the appointment of Penny Anderson, Raleigh Boreen, Bev Heilicher and Dennis Dean to the SCCA Foundation Board. Lybarger/Patullo. PASSED.

> **MOTION** to approve the re-appointment of Andy Porterfield, Chairman, Chris Funk and Gary Pitts to the SCCA Enterprises Board. Lybarger/Patullo. PASSED.

Walsh presented update on progress with SAE regarding safety standards and SAE becoming a safety certification body. Any possible agreement would be an expected 3-5 year process. Walsh and Merideth will pursue finding the path and then handoff to staff for follow through.

FINANCE REPORT

Ehret reported that Inc. finished year at operating income $186K. Good operational cost control discipline. Pro Racing ended

2011 with a net loss of $21K and Enterprises turned in slight profit ~$14K. Both subsidiaries continue to make payments (principal and interest) towards outstanding loans.

Discussion of the revised 2012 Budget based on additional spending for the marketing initiative and industry study on the future of motor sports approved at the December board meeting. 2012 budget includes increase in insurance recovery costs and increase in competition license costs as well.

Wannarka request for Dashboard to be continued for 2012 as the Board finds this to be a helpful tool.

CLUB RACING REPORT

Ozment discussed progress on the Sanction Fee alternatives project. They are reviewing different scenarios and their impact on the regions. Switching from per event type sanction to single sanction fee …Ozment will come back in May with an actual recommendation…building spreadsheet showing impact on regions.

Kephart question regarding hillclimb risk and impact on insurance.

McCarthy question regarding sanction fees. Ozment fees haven't changed in 4 years. Program structure intended to make events affordable for all regions.

MOTION to approve TTAC rule change in 7.4.2 and 7.5.3 to give power of delegation effective immediately. Patullo/McCarthy. PASSED.

Time Trial competition license approvals were discussed. The main topic was the possibility for an allowance in the TTR that allows for additional approvers of Time Trial Competition Licenses in each Division. MOTION: To submit the following changes/additions to the TTR to the BOD for approval:

7.4.2. APPLICANTS WITH PRIOR RACING EXPERIENCE

The TT Divisional Program Manager **or authorized designee appointed by the TT Divisional Program Manager** may waive all or part of the requirements for drivers with prior racing experience. Participants with a Regional Competition license, its equivalent, or higher, may use that license and do not need to obtain a Time Trials license. A valid Rally America license may be used in place of a TT Novice License; these drivers will retain novice status until obtaining a TT Competition License. All participants in Track Trials (Level 3) or Hillclimb (Level 4) events must have a current SCCA membership.

7.5.3. APPLICANTS WITH PRIOR DOCUMENTED EXPERIENCE

Participation requirements for issuance or renewal of a TT Competition License may be waived in total or in part only by the TT Divisional Program Manager, SCCA Club Racing Manager, **or authorized designee appointed by the TT Divisional Program Manager**."

MOTION: Delete the sentence from section 9.3.29.A: The numeral "1" shall be exclusively reserved for the current national champion in each class for national events. If 2 or more national champions are entered in the same run group, the first to register shall have preference. Butler/Langlotz. FOR: Butler, Langlotz, Lybarger and Jones. AGAINST: Patullo, Harris, Walsh, Creighton, McCarthy, Lewis, Kephart, Noble. Abstained Wannarka. MOTION FAILED.

MOTION: to refer issue with section 9.3.29.A to the CRB for consideration. Creighton/Harris. PASSED 12-0-1. Abstaining Langlotz.

MARKETING/COMMUNICATIONS REPORT

Prill currently working multiple sponsorship packages for 2012 and beyond. Working on a possible opportunity with Formula SAE teams in conjunction with Solo programs and Gumout sponsorship.

Feedback on digital issues has in general been good. Small percentage continue to opt out of paper copy. The next issue of SportsCar will be digital only. Under discussion is a special publication of a 2012 yearbook issue in time for the holidays.

The recent Guide to SCCA for new members (March issue) has received many compliments. Multiple requests by regions to use it as a marketing tool which was not the intended purpose but marketing staff will look into repackaging it for that purpose.

Staff is currently working with Trozzolo and Associates, an outside consultant on SCCA marketing and branding.

Majors promotion: have established contacts with key groups of drivers in Majors pilot zone to help drive social awareness and generate buzz for program.

FOUNDATION/RALLY AND SOLO REPORTS

Howard Duncan reported that the Rally/Solo department re-organization is proceeding as planned. Update on Rally program given…rally is a very small percentage of SCCA membership interest.

RX Divisional steward position in CenDiv Dustin Nevonen LOL Region.

> **MOTION** to approve the recommendation by the RXB to appoint Dustin Nevonen (LOL Region) as RX Divisional Steward for Cendiv. Lybarger/Harris. PASSED.

Early season #s are positive, the first event is filled with a waiting list and the second event (College Station) is not full yet.

2012 will be the 40th anniversary of Solo Nationals – using the promotion throughout the year…one of the focal points of this promotion: history of women in the sport of Solo with a special Monday luncheon.

Early season planning session with all staff and field staff in Topeka was very useful setting plans for the year.

TRSS Summit which is Sunday at convention has 100+ people participated in the Sunday summit…over half are SCCA members and remainder are BMW club…first effort is looking to be very positive for the expansion of the program.

CONVENTION
Thoennes reviewed the convention schedule with detail on the responsibilities of the board as well as format changes to enhance the event.

MEMBERSHIP/REGION SERVICES REPORT

Arnold presented the new membership card which replaces the old 2 piece card.

Good progress on collecting membership interest data collection and participation. Completed for Road Racing, working on Solo and Rally, RallyCross.

Reviewed new multi-year membership options and automatic renewal options. This will include Competition licenses. Currently insert for Comp license is manual, should be automated by mid-year.

Convention attendance for 2012 very good (420+) similar to 2011. Las Vegas slated for 2013 again due to low sleeping room pricing for attendees.

Arnold presented proposal for tiered membership pricing and benefits. Concept is to balance costs vs level of services. Associate Membership (tentatively called Access Pass) and Full membership were recommended. BoD review and Q&A. Arnold to modify according to comments for June BoD meeting. Intent is to inform and present constraints of variable cost models for membership vs cost of service delivery. Good analysis of membership numbers, and tradeoffs, new members, converting weekend members to new “right price” memberships etc.

Planning Committee Report: Kephart

Lots of ideas and concepts developed over time, not all active, none are supposed to be the home run but incremental improvements that add up. Trying to look at issues areas and contributing factors. This goes for everything from Region assistance, new members, membership retention, to BoD turnover, consistent policy directions, and relationships with manufacturers.

Discussion about FSAE program and participation with SCCA at June 20, Lincoln, NE event. Value seen providing SCCA membership to these participants.

> **MOTION:** To authorize the club to distribute complimentary associate memberships to qualified FSAE teams. Kephart/ Patullo. PASSED.

Anticipated that most of FSAE members will be First Gear category. SCCA Membership will set up new key in membership code so Region Registrars will know who and where these people came from.

Discussion on the Majors program and progress on 2012 pilot. Details have been worked through the Regions hosting the 6 pilot events. Significant learning has occurred and continues in how to drive this forward, engage with drivers and region officials. Response has been very positive overall. Club Racing is hiring a field staffer to assist with Majors program. BoD voted 13-0 for the majors program and needs to be 100% supportive to successfully assist rollout. BoD is in agreement that rollout should happen in 2013. A committee was established to research Majors zones for the 2013 national rollout which won’t necessarily

need to follow division boundaries. The goal is 6 Invitational Majors per zone, but 4-6 acceptable. Will accept fewer events, fewer Zones and focus is on doing it well. Showcase Festival events should be 1-2 per zone. Assistance to Regions for Showcase Nationals will be provided.

> **MOTION:** The Board of Directors support the intent to roll out the Majors program Nationwide in 2013 to the greatest extent possible. Kephart/Walsh. Approved Unanimous

Discussion over Runoffs shortened duration format. BoD voted in December to task staff to develop a proposed Runoffs schedule that would require competitors to be there no more than 4 days. Staff has presented several formats and presented one to all national competitors in a survey. Approximately 30% response rate (1500 of 4500) with approximately 70% favorable of a shorter schedule. There was an indicated ~90% plus increase in favorable consideration for attending Runoffs. Class by Class breakdown ranged from about 1:1 (break even) to 2:1 up to 10:1 in favor of shorter schedule. Note that issues to address at track are parking and move in, schedule is "different" in that it is not symmetrical (all practice, all qualifying, all race), it has racing and qualifying sessions mixed. Schedule tries to group racing around lunch time starting Thursday-Sunday, and takes survey preferences in to account as much as possible.

> **MOTION:** The Board of Directors is in support of the shorter, non-traditional Runoffs schedule. Club racing and CRB to publish schedule. Kephart/Butler. Approved Unanimous.

Stewards Program Annual Report: Nokes

There was discussion of the Court of Appeals. The current Operations manual dealing with the Court of Appeals does not align with the GCR. CoA and Stewards Program Advisory Committee worked to clean up language and make the documents consistent.

> **MOTION:** To accept rewrite of Section 5.6 Club Racing Court of Appeals procedures in the Operations Manual . Lybarger/Harris. PASSED Unanimous
>
> **5.6 Club Racing Court of Appeals**
>
> SCCA's judicial system follows the well-established civil principle that a party to a First Court decision may request a second, higher court to review the decision. The Club Racing Court of Appeals (COA) fulfills that role.
>
> A party to a First Court decision may appeal on any of the following grounds:
> - Evidence not reviewed by the First Court
> - Procedural errors by the First Court
> - Inequitable or unfair application of the General Competition Rules or event Supplemental Regulations
>
> The Board of Directors shall appoint members of the COA for one-calendar year terms in December of the previous year. COA members may be appointed to consecutive one-year terms but will not normally serve more than four terms in succession. The Chairman of the Stewards Program shall provide a list of candidates for the Board's consideration. Each candidate shall submit his/her resume to the Board.
>
> Nominees shall be active and experienced stewards who have demonstrated sound judgment and a substantial commitment to the Club Racing Program. At least one member of the COA should have current or recent racing experience. The Court normally has five members.
>
> No current member of the Board of Directors, Club Racing Board, or staff member of SCCA, Inc. or any of its subsidiaries may serve on the COA.
>
> The Chairman of the Board, after consultation with the Chairman of the Stewards Program, shall select one member of the COA as its Chairman. The COA may appoint a non-voting Secretary.
>
> A Court of at least three, selected from the members of the COA by its Chairman, shall hear each appeal. No member involved in the action under appeal or with a direct or indirect interest or involvement in the matters under consideration may serve on this Court.
>
> The Club Racing Department shall provide proper notices to all parties to the appeal.
>
> The COA shall publish its decisions in their entirety, normally in Fastrack. The report of the proceedings shall identify the stewards involved in the original action and the members of the Court that adjudicated the appeal.

Duties: The Club Racing Court of Appeals shall serve as a second review court, hearing matters brought to them as outlined in the current SCCA Club Racing General Competition Rules and herein.

Nokes provided high level review of Stewards strategic plan.

Review of overall Stewards program. Comprehensive overhaul and updating of manuals and procedures completed. Training materials are updated and current, best practices and guidelines for steward specialties are written and published as well as Stewards guidelines, behavior, penalty guidelines and steward evaluations. SIT boot camp training materials are available. Majors will be a change opportunity, with series Steward and officials to provide consistency.

Discussed moving beyond SIT school as it goes to a Division level. A new "Top Gun" type of school for high-level training of Stewards, knowledge skills, advanced training, and types of situational training they may not get in home regions. Nokes asked the BoD for an endorsement of the concept.

MOTION: The Board of Directors endorses the concept to develop a Stewards "Top Gun" program for advanced training with intent to offer first courses in 2013. Langlotz/McCarthy Approved Unanimous.

Stewards Advisory Committee will develop set of questions for drivers, workers, and race organizers to provide feedback on Steward performance.

The Board of Directors were given a report on the state of SCCA Enterprises by Erik Skirmants, President/CEO. Skirmants reported on success of 2011 and plans for 2012.

The Board of Directors were given a report on the state of SCCA Pro Racing by Tom Campbell, President and Scott Clatterbuck, Business manager. Campbell reported on success of 2011 and plans for 2012.

Members of the Club Racing Board: Chris Albin, Jim Drago, Mirl Swan, Peter Keane, Fred Clark and Jim Wheeler met with the Board of Directors.

Wannarka thanked members of the CRB for their time and valuable contributions to SCCA. He noted that SCCA is commissioning an industry study on future of motorsports and direction of club racing and the subsequent impact this may have on CRB activities going forward.

The recent BoD decision to support a shortened Runoffs schedule was discussed. Prill presented the summarized Runoffs survey results to the boards which influenced the board's decision. The response rate of the survey was approximately 30% (1500 of 4500). Of those, approximately 70% were in favor of a shorter schedule. There was a strong indication that those not currently attending the event would attend if the event was shortened.

Kephart gave an update on the Club Racing Majors Program. The goal of the majors is to cluster competition. Driver response is overwhelmingly positive. The BoD made a conscious decision (13-0 vote) to support Majors rollout in 2013 to best extent possible with a goal of 6 Majors per Zone with recognition that there will be some hybrid events in 2013.

Wheeler and Patullo presented the CRB Rules Package effective 4/1/12.

MOTION: To approve the following rules package effective date of 4/1/2012. Patullo/Butler. PASSED 12-0, Langlotz-Abstained.

GCR

1. #6539 - January

In 9.3.12, delete the last sentence: ~~"Helmet mounted cameras are prohibited regardless of size, weight, or location of camera on the helmet."~~ [This would permit helmet mounted cameras if judged safely mounted by scrutineers.]

2. #6706 - February

Thank you for your letter. Heat shielding is permitted and encouraged, but is not mandated. The CRB suggests adding the following sentence to the end of GCR 9.3.28: *Heat shielding between fuel/oil lines and fuel/oil filters and exhaust components is strongly recommended.*

FORMULA

1. #6901 - February

The following is the proposed rule set for a regional-only F600 class in accordance with the BoD guidance from its December 2011 meeting. All F500 rules remain unchanged except the following: K.6 and K.14 are replaced in their entirety; K.16 is included in K.14; K.17.A is superfluous and K.17.B does not apply.

K.1. Definition

A class for singleseat, open wheel, race cars using 600cc motorcycle engines. Specifications are restrictive in nature in order to emphasize driver ability rather than design.

Formula 600 is a restricted class. Therefore, any allowable modifications, changes, or additions are as stated herein. There are no exceptions. IF IN DOUBT, DON'T. Homologation is required for all cars.

K.2. Weight and Dimensions

Minimum weight as qualified and raced, with driver, shall be 875 pounds.

Wheelbase:	*Maximum*	*80 inches*
Overall Length:	*Minimum*	*110 inches*
	Maximum	*150 inches*
Overall Width:	*Minimum*	*50 inches*
	Maximum	*55 inches*

K.3. Suspension

Suspension shall be restricted and of a safe, suitable design. "Restricted" is defined as follows:

A. There shall be no springs or shock absorbers acting either directly or indirectly between the frame/chassis and axle.

B. Rear driving axle shall be of solid or tubular steel. Axle shall be one piece live axle, driving both rear wheels. Trailing arms are allowed. Differentials and/or slip joints are not permitted. The object of K.3.B is to eliminate independent rear suspension of any type, or provision for lateral movement of the axle shaft to facilitate independent type suspension.

C. Blocks, bushings, and/or mounts of rubber or similar material shall be used to isolate engine and drive assemblies, and/or axles from vibration, shock, or track irregularities. The number of mounts shall not exceed one (1) per wheel and shall not exceed one (1) inch in thickness in uncompressed state nor shall they be stacked. The diameter of the mounts shall not exceed two (2) times their thickness. The mounts shall carry the weight of the car. Installation will be evaluated on compliance with both the letter and the intent of this provision.

D. Front axle(s) design and/or mounting configuration shall be such that the axle(s) does not function as a torsion bar. Split axle/independent front suspension is permitted so long as suspension control is affected solely by the mounting defined herein.

E. Anti sway bars are not permitted.

K.4. Brakes

Brakes shall be foot-pedal operated, hydraulic disc ~~or drum-type,~~ acting on all four wheels. The brakes shall be a dual system, arranged in a manner to provide braking for at least 2 wheels in the event of failure in part of the system.

K.5. Steering

Steering is unrestricted provided it is of a safe and suitable design.

K.6. Transmission and Final Drive

A. *Only rear wheel drive is permitted.*

B. *The final drive ratio is unrestricted. Internal transmission gears shall remain stock.*

C. *Engines must use the sequentially shifted motorcycle transmission as supplied with the engine. Reverse gear is not required.*

D. *All gear changes must be initiated and made by the driver. Only mechanical gear shifting mechanisms are permitted. This may include cables, rods, or other mechanical linkage systems. All other shifting mechanisms are not permitted. This prohibition shall include electric solenoid shifters, air-shifters, etc. Devices that allow pre-selected gear changes are also prohibited.*

E. *The clutch assembly is unrestricted except that the clutch engagement system shall be operated solely by driver input and may be mechanical or hydraulic in nature. The driver's hands or feet must manually operate the clutch and there shall be no operation of the clutch by any assisted method. There shall be no modifications to the engine/transmission to enable the use of replacement clutch components or assemblies.*

F. *Mechanical throttle mechanisms must be used on all engines. Computer, electronic or pneumatic control of the throttle position is not permitted.*

G. *The use of jackshafts to transmit power from the output shaft to the rear axle is permitted.*

H. *Final drive chain tensioners are permitted.*

K.7. Frame/Chassis

The frame/chassis assembly shall be constructed of steel tubing, and shall be of a safe and suitable design. There shall be a bulkhead incorporated in the chassis forward of the soles of the driver's feet with the pedals depressed. Forward facing braces protecting the driver's legs and feet shall extend from the front roll hoop to the front bulkhead, unless foot protection is provided in accordance with 9.4.5.G.1.B.

The soles of the driver's feet shall not extend beyond the front edge of the wheel rims (in normal position; i.e., pedal not depressed).

K.8. Roll Cage

Cars shall have a full roll cage complying with section 9.4.5, made of steel, and designed so that when viewed from overhead, an opening, having a minimum width of fourteen (14) inches and a minimum length of seventeen (17) inches is available for driver extraction under emergency conditions.

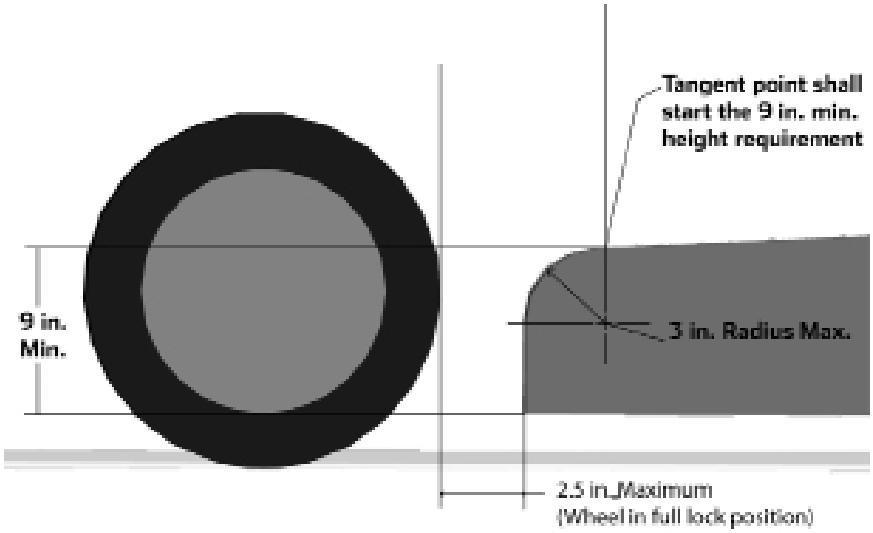

K.9. Bodywork

All mechanical components of the car, forward of the roll cage, shall be covered by suitable bodywork. Exceptions are the wheels, brakes, front suspension components, and the cockpit. Driver's seat shall be capable of being entered without the removal or manipulation of any part or panel. Sports car noses are recommended provided they do not extend beyond the outside edge of the front tires, do not stand taller than the top of the front tires, and their rearward most portion does not extend beyond an imaginary line drawn from the center of the front wheel, forty (40) degrees forward from vertical.

Bodywork behind the front wheels and forward of the rear wheels shall extend to within one (1) inch of a line connecting the outer edges of the front and rear wheels. In a horizontal plane, it shall begin within 2.5 inches of the rear-most part of the tire in the completely turned position and extend to within 4.5 inches of the front of the rear tire. The side pod(s) shall be continuous from the outside edge of the main bodywork, at a minimum height of nine (9) inches, maximum twelve (12) inches measured from the bottom plane of the car. The side pod(s) shall be closed across the front except for air duct openings to heat exchanger(s), but ALL ducted air shall pass through those exchanger(s). The side pod(s) may be open to the rear. Side pod(s) is (are) intended to restrict wheel entanglement between cars. The purpose of these rules is to minimize the use of "ground effects" to achieve aerodynamic down force on the vehicle. Thus, for full width of the body between the front and rear axles, the lower surface (surface licked by the airstream) shall not exceed 2.54cm (1 inch) deviation from the horizontal in any longitudinal section through that surface. (This is not to be interpreted as requiring a floor pan beneath the engine or rear axle.) The bodywork shall not extend below the surface of the chassis floor to the rear of the front axle. Seat bucket or other protrusions shall not circumvent this rule. It is not permitted to duct air through any part of the bodywork for the purpose of providing aerodynamic down force on the car. Wings are prohibited.

K.10. Tires

Any recognized ten (10) inch racing tire with any tread width up to a designed 7.5 inch width may be used. Any HR rated radial tire may be used as a rain tire.

K.11. Wheels

Wheels shall not exceed a ten (10) inch diameter and 8.5 inch width.

K.12. Ballast

Ballast may be added to meet the minimum weight requirement provided it is securely mounted within the bodywork and serves no other purpose. It is recommended that underweight cars be brought to the minimum limit by adding strengthening material to areas providing driver protection; i.e., roll cages, frame rails, etc., rather than simply bolting in additional weight.

K.13. Fuel Tank

The fuel container shall be located within the bodywork, ahead of the rear wheels and behind the centerline of the front wheels.

K.14. Engines

A. Mass produced Honda, Kawasaki, Suzuki or Yamaha water-cooled, 4 cylinder, 4-cycle motorcycle engines up to 600cc are allowed.

B. It is the purpose of this section to control the power level of current and future F600 engines to be approximately the same. Thus all engines must use individual inlet restrictors (IIRs) that comply with Appendix F, Flat Plate Intake Restrictor, except the third and fourth bullet items. The IIRs holes shall each be 32.0 mm in diameter. The IIRs shall be placed between each cylinder throttle body and its corresponding inlet port. The CRB may require adjustments to the restrictors at any time by publication in Fastrack.

C. All engine internals and compression ratio must remain stock. The competitor must present, on demand, an original factory manual for the engine to allow compliance verification. There shall be no modifications of any component of the engine unless specifically authorized in these rules.

D. The stock ECU shall be used. The ECU fuel and ignition map may be changed. Devices that modify inputs to or outputs from the ECU (e.g., Power Commander) may be used. Stand-alone after market ECUs are not permitted.

E. Turbochargers and superchargers are prohibited.

F. Carburetion or fuel injection may be used. Fuel injection, if used, must be stock and unmodified for the model and year of the engine that is used.

G. The exhaust system and exhaust manifold are unrestricted, within SCCA safety regulations, except that stepped exhaust headers are not allowed.

H. The lubrication system is unrestricted. Any oil pan and/or baffling are permitted and the use of dry sumps, Accusumps or similar oiling assist systems are permitted.

I. Oil coolers are unrestricted.

J. The cooling system is unrestricted.-

K. Replacement of the stock camshaft chain tensioner with any other chain tensioner is permitted. The replacement chain tensioner must attach directly to the engine in the original chain tensioner position. There shall be no modifications to the engine to enable the use of the replacement chain tensioner.

L. Replacement of the standard connecting rod fasteners with alternate fasteners is permitted as long as there are no modifications to the production connecting rods Replacement of other nuts, bolts, fasteners, and washers with common hardware items performing only the same fastening/fitting functions also is permitted as long as there are no modifications to the production parts being assembled or to the production assembly.

M. The engine head gasket must be the thickness of the OEM gasket for the year and model of the engine.

N. Camshafts and camshaft drive mechanisms may not be modified or adjusted in any way unless specifically authorized in these rules.

O. Self-starter: Cars shall be equipped with an on-board self-starter and an on-board power supply controlled by the driver while in a normal driving position.

K.15. Chain Guards

Protective guards made from 1/8" aluminum or 3/32" steel are required where chain breakage could result in injury to the driver or damage to items necessary for the safe operation of the vehicle. This includes, but is not limited to, fuel lines, fuel tanks, brake lines, radiator, and water hoses.

GRAND TOURING

GT2

1. #6452 - February

Cars must be prepared to Panoz Esperante GTS specifications and competitors must have a copy of the current GTS rules in their possession. Wheels: (F) 18x10 (R) 18x11. Track (F) 64.0 (R) 67.8. Any tire with a diameter of 17" or 18" may be used provided the tire does not exceed a maximum cross section width of 11.5" in the front and 12.5" in the rear; *or may use conventional GT2 tires and wheels per GTCS 9.1.2.F.4.c.10.* Internal modification to stock Penske 7500 shocks is permitted. Shock seals are not required. *Brakes are unrestricted. Front and rear anti-roll bars are unrestricted.*

SPEC MIATA

1. #6861 - January

In 9.1.8.C.8.e, change as follows: "Carpets, center consoles, cargo bins, seat belts, floor mat, firewall insulation/blanket, *sound deadener patches, undercoating,* radio system, headliners, dome lights, grab handles, sun visors and their insulating and attaching materials may be removed. Other than to provide for the installation of required safety equipment or other authorized modifications, no other driver/passenger compartment alterations or gutting are permitted."

T3

1. #6500 - January

In 9.1.10, T3, BMW Z4 3.0si Coupe (07-08), change weight from 3500 to *3400* and add to Notes: "*May use H&R springs: front RF160090, rear RF160100; rear spring height adjusters: Turner #HR92-K-X-011A01; H&R sway bar kits: front 70276 27mm, rear 71276 21mm, at 3500 lbs.*"

> **MOTION:** To approve the following rules package as presented by the CRB with effective date 1/1/13. Patullo/Butler. PASSED Unanimously.

FORMULA

1. #6514 - February

Add the following new section: *9.1.1.E.14.K The following after market replacement cyli□nder sleeves manufactured by Los Angeles Sleeve of Santa Fe Springs, CA are for the Rotax 493 and 494 respectively: Rotax 493: FL-1286 (69.5mm) Rotax 494: FL-1224 (69.5mm) Note: the appearance of the port is machined as opposed to the as-cast port of the OEM sleeve and the sleeves are machined to size after installation in the cylinder casting.*

SUPER TOURING

STO

1. #6665 – January

In 9.1.4.1, STO, permit stock, factory OEM wheels on Dodge Vipers.

PRODUCTION

1. #6467 - January

In 9.1.5.E.1.n.4 and 9.1.5.E.2.n.4, change as follows: "*For rear wheel drive cars,* ~~T~~*t*he transmission tunnel and tunnel cover can be altered to allow the installation of an alternate **transmission** and/or **drive shaft**. *For front wheel drive cars, the **body**,*

***unibody**, **frame**, **suspension** crossmembers/subframes and their components may be altered to the extent required to allow the installation of an alternate **transmission**, **transaxle** and /or **drive shaft**.*"

HP
1. #6570 - January
In 9.1.5, HP, Alfa Romeo Giulietta Sprint & Spider, 750 & 101, Normale (Spider) & Veloce (Super Spider), change track to *55.6 front and 54.6 rear* and wheel size to *15x7*.

2. #6778 (CRB) - January
In 9.1.5, HP, Toyota Corolla (71-74), add to Brakes Alt.: mm/(in.): "*(F) 10.0 Solid Disc Rotors and Calipers from 73 Corona*".

TOURING
T1
1. #6552 - January
In 9.1.10, T1, Porsche 911 Carrera S (05-07), add to Notes: "*Transmission coolers are free. Ducting for coolers is free, provided it doesn't change size and/or shape of factory body panels. Spring rates are free. Sway bar size & configuration is free. Removal of rotor dust shields is allowed. Spoilers & bumper/airdams are free provided they do not exceed the max. body width by any amount and/or the max. body length by more than 1". Rear wings may be no higher, relative to the roofline, than a factory, non-extended, 3.8 RSR wing. Camber adjustment slots may be elongated. Porsche Motorsport rear control arms allowed.*" [These are the same allowances as the T2 Porsche 911 / 996 (98-05).]

2. #7075 (CRB) - February
Add to spec line for BMW E92 M3 (08-09) BMW M3 GTS (2010), Max Wheel Size (inch): *F: 19X11 R: 19X11*

T2
1. #6644 - January
In 9.1.10, T2, Ford Mustang V6 2011-2012, change as follows: Max Wheel Size: from 18 x 8 (F&R) to *18 x 10 (F&R)*, Tire Size: from 245 (max) (F&R) to *295/35 (max) (F&R)*, Final Drive: from 3.31 to *3.55*. Add to Notes: "*Ford Spring Kit – M 5300-A (M-5310-A Front, M-5560-A Rear) permitted.*"

T3
2. #6563 – January
In 9.1.10, T3, Ford Mustang GT (01-04) incl. Bullitt (2001), add to Notes: "*H&R Race Springs (79-04 Mustangs) part #47200, includes 750-850 (progressive), 260-280 (progressive, solid axle) permitted at 3400 lbs and tire size 245.*"

Wheeler presented an overview of active class management and high level concepts for class management and structure. The Board via straw vote demonstrated their support of FSARC (what does this abbreviation stand for?) consolidation directions.

CRB to present roadmap of classes and timelines to the BoD at the June BoD meeting including proposed rules changes for Touring and SS classes for 2013.

Discussion about the ad hoc competitor driven committee of GT drivers, owners, builders to work out classes and consolidation, will have to follow normal CRB advisory committee and CRB process.

Production Classes: No changes proposed. GP is not coming back.

The Board of Directors met individually with the chairman from the various program boards: Tony Machi, TTAC; Ken Cashion, RXB and Steve Hudson, SEB regarding their concerns and strategic planning.

The Board met with Jim Wheeler, Chairman of the Club Racing Board and discussed a proposed change from the CRB to the Runoffs Invitation qualification.

> **MOTION:** To accept change to Runoffs qualification as presented by the CRB to accept top 50% of national point standings for entrants in class (3.9.3) or finish in the top 90, whichever is less. Patullo/Butler. FAILED. In Favor: Patullo, Butler, Lybarger Opposed: Walsh, Lewis, McCarthy, Langlotz, Jones, Harris, Kephart, Wannarka, Noble . Note: missing vote by Creighton (for or against?)

As this change was brought to the Board in a short time frame, Staff is requested to bring data to the Board on this matter and an alternative bonus point option for the National Series Points Standings.

BOARD OF DIRECTORS

SCCA Board of Directors | Feb. 29 - March 4, 2012

SCCA National Board of Directors met via conference call Wednesday 3/14/12. The following directors participated: Jerry Wannarka, Lisa Noble, Michael Lewis, Dick Patullo, John Walsh, Todd Butler, Bob Lybarger, Phil Creighton, R. David Jones, Robin Langlotz, Steve Harris and Brian McCarthy. Bill Kephart was not present.

The following SCCA, Inc. staff participated in the meeting: President CEO Jeff Dahnert.

The secretary acknowledges that these minutes may not appear in chronological order and that all participants may not have been present for the entire meeting.

The meeting was called to order by Chairman Wannarka.

Dahnert reported that ACCUS is setting up an LLC in regards to the administration of the Formula 1 events in the United States in 2012. This LLC will then work with respective membership clubs to provide support for these events. Dahnert is on the managing board of said LLC and the SCCA National Office will coordinate SCCA involvement.

Club Racing Board asked BoD to review the qualification criteria for Runoffs invitation. There was an active discussion about the national championship points and possible qualification changes for 2012 Runoffs. Practical impact is to on two specific classes, SM and SRF. Impact of a change on these classes was discussed and, in particular, changing qualification rules at this point in the season.

Current rule 3.9.2.A.2.b says:

> Finish in top 50% of National point standings (3.9.3) for his class. Example: If 100 drivers score points in a class, the top 50 will receive an invitation.

Proposed Change:

> Any driver who scores points in top 50% of National point standings (3.9.3) for entrants in his class. Example: If 100 drivers enter National races in the current race season, the top 50, who score any points, will receive an invitation.
>
> **MOTION:** Change Runoffs qualification requirement 3.9.2.A.2.b to "any driver who scores points in top 50% of National point standings (3.9.3) for entrants in his class". Butler/Patullo. FOR: Wannarka, Noble, Patullo, Walsh, Butler, Lybarger, Creighton. OPPOSED: Lewis, Jones, Langlotz, Harris, McCarthy. PASSED 7-5. Special note: Directors who opposed this measure would have supported the change for 2013 only. They did not support a mid-year change.
>
> **MOTION:** Approve the appointments of Dr Kent Carter (Southwest Division) and Dan Goodman (Rocky Mountain Division) to the Time Trials Advisory Council. PASSED – Unanimously.

Wannarka addressed the potential addition of an 8th member to the Club Racing Board. The BoD deferred this decision for consideration to the next board meeting June 1-2. A change of this nature would also require an Operations Manual change.

A proposed change to GCR language for Tow Fund distribution for Runoffs was submitted by Noble on behalf of Ozment. This is in support of the 2012 Majors pilot. Drivers will not be allowed to "double dip" and collect Divisional and Majors tow funding. This change requires the addition of this sentence to the criteria: **"Drivers who do not finish in the top three in their division, but finish in the top three in the Invitational Classes of the Majors Pilot will also be eligible for tow fund."**

> **MOTION:** To approve the change in Tow Fund Language Section 3.3 of the GCR to:
>
> 3.3. Distribution of Tow Fund: Tow fund will be paid to drivers who meet the following criteria:
>
> - Top three (3) drivers with the highest points total in each class from each Division if they attend the event (no tow money will be paid to drivers living closer than 299 miles and the maximum mileage to be paid will be 2,100 miles).
> - **Drivers who do not finish in the top three in their division, but finish in the top three in the Invitational Classes of the Majors Pilot will also be eligible for tow fund.**
> - If any of the top three in points in a class do NOT attend the event, the tow fund will NOT be paid farther down the points list.
>
> Noble/Butler. PASSED 11-1. OPPOSED: McCarthy.

Noble, Jones, Dahnert gave a report on the first Majors event in Texas last weekend. It was a very wet weekend, but about 20+ out of Division drivers attended. Definitely felt that Series Stewards arrangement and authority worked well. Good ceremonies in Impound for podium finishers and awards in front of competitors. Given the weather circumstances, things worked pretty well. Lessons learned will be factored into upcoming events. Staff responsibilities similar to BFGoodrich Tires Super Tour.

CLUB RACING BOARD

SCCA Club Racing Board Minutes | March 6, 2012

The Club Racing Board met by teleconference on March 6, 2012. Participating were Jim Wheeler, Chairman; Chris Albin, Fred Clark, Jim Drago, Peter Keane, Tom Start, Mirl Swan, and Pam Richardson, secretary. Also participating were: Todd Butler and Richard Patullo, BoD liaisons; Terry Ozment, Vice President of Club Racing; Doug Gill, General Manager, Technical Services Department; John Bauer, Technical Manager; and Ryan Miles, Assistant Manager. The following decisions were made:

SUGGESTED RULES FOR 2013

The following subjects will be referred to the Board of Directors for approval. Address all comments, both for and against, to the Club Racing Board. It is the BoD's policy to withhold voting on a rules change until there has been input from the membership on the presented rules. Member input is suggested and encouraged. Please send your comments via the form at http://www.crbscca.com/ or www.clubracingboard.com.

GCR

1. #7627 (BoD Action Item) Use of the Numeral "1"

Change 9.3.29.A: A. Numbers shall be placed on the front and both sides of the car so that they are legible. All Formula cars with a rear wing shall have legible numbers on each rear wing side plate. Numbers shall be no more than 2 digits, and shall meet the approval of the Chief of Timing and Scoring. 3 digit numbers may be used when individually approved in advance by the Chief of Timing and Scoring. Class letters shall be placed on both sides of the car so that they are legible. Rear numbers and class letters are recommended. The numeral "1" shall be exclusively reserved for the current national champion in each class for national events. If 2 or more national champions are entered in the same run group, the first to register shall have preference. *If no current National champion is using the numeral "1," then a past national champion may use the numeral "1."*

FORMULA

None

GRAND TOURING

GT

1. #7509 (GT Committee) Add to 9.1.2.F.4.i.5.E

Direct injection is not permitted.

SUPER TOURING

STO

1. #7459 (Christopher Childs) Correct the Engine Displacement – Panoz

Thank you for catching this. Please change displacement in STO, Panoz Esperante GTS, ~~5940~~ *5800*.

IMPROVED TOURING

None.

PRODUCTION

ALL

1. #7154 (Chuck Mathis) Allow CIS fuel injection to be replaced with Digifant

Thank you for your request. Change 9.1.5.E.1.b.4, Car's permitted to utilize fuel injection, must use the stock manifold and throttle body. The throttle body bore size must remain stock. The throttle body can be ported and polished. The number of injection nozzles must remain the same as stock. The mounting position and injection point of the injection nozzle must be stock. ~~The stock type of fuel injection must be maintained (electronic, mechanical, Bosch CIS, etc.).~~ *Electronic **fuel injection** may be substituted for the **stock** type of fuel injection.* The fuel injection system is otherwise unrestricted.

Also, change 9.1.5.E.2.b.4, Fuel Injection: All inducted air must pass through the throttle body and be subject to control by the throttle butterfly. The stock throttle body casting/housing must be retained. The inside dimensions of the throttle body casting/housing and all dimensions of the throttle butterfly must remain stock. The throttle butterfly shaft must not be relocated. The outside diameter of the portion of the throttle butterfly shaft located in the throttle body bore must be no smaller than stock. The contour of the interface between the throttle butterfly shaft and the butterfly must remain stock. The throttle butterfly and any throttle butterfly to shaft screws/bolts can be attached to the throttle butterfly shaft by any means including welding or brazing. Holes or slots can be created in the throttle butterfly for purposes of idle adjustment only. The number of injectors must remain stock. The mounting position and injection point must be stock. ~~The original type of fuel injection must be maintained (electronic, mechanical, Bosch CIS, etc.).~~ *Electronic **fuel injection** may be substituted for the **stock** type of fuel injection.* In all other respects the fuel injection system is unrestricted.

AMERICAN SEDAN

None.

SHOWROOM STOCK
B-Spec
1. #7376 (T-SS Committee) Track Specification
Remove track width column from the B-Spec specification line for all cars for simplicity.

SPEC MIATA
SM
1. #7625 (Club Racing Board) Recommended Rule Change Portion of Letter #6400 (Technical Bulletin)
Thank you for your letter. Add to 9.1.8.C.1.o.2: *Fan shroud and brackets may be modified for installation.*

SPORTS RACING
None.

TOURING
None.

WHAT DO YOU THINK?
None.

MEMBER ADVISORIES
General (Runoffs)

Since the BoD has directed the CRB to propose class consolidation, the CRB needs data to ensure that this process keeps the competition as close as possible. For that reason, the CRB plans to conduct data acquisition at the 2012 Runoffs. Data will remain proprietary and under the secure control of the SCCA. Competitor's information will not be published or shared with any competitor. The following classes shall be included in the study:

T1, T2, T3, SSB, SSC

GT2, STO, STL, STU

CSR, DSR

Drivers selected will be required to participate and will also be required to develop an area in their car where tech personnel can mount the DL1s. SCCA will provide dimensions and specifications for this mount. Drivers required to participate will be notified in a timely fashion prior to the Runoffs.

Grand Touring
GT

1. #6979 (GT Committee) Member Advisory- GT Philosophy
The GTAC would like to thank the various GT2, 3, and L competitors that provided input from our published "What Do You Think" (February 2012 Fastrack) regarding precision adjustments. We received phone calls, emails, and 23 thoughtful letters submitted to crbscca.com. In rough terms, 65% of the letters were in favor of maintaining the status quo regarding adjustments. Of those in favor of no change, there were several that would be willing to allow it with some caveats, but we left these in the "no change" category as the caveats were not really within the spirit of what we were inquiring about. Examples of the caveats include:

- Only aerodynamic changes
- Only to speed cars up
- Only in GTL
- Only 4 changes per year max
- Only if we can undo them nearly instantly if we get them wrong
- Only for bore/stroke

Clearly the preponderance of the population that voiced opinions is content with the status quo and/or is not confident that the volunteer rules making committees would have the assets to effectively migrate to a precision adjustment model.
As a result, we intend to remain committed to our current adjustment approach which would be to make adjustments uniformly to a specific classes of engines (such as all 2V 1600s or all 4V 2400s) which would then receive the same adjustment.

Thank you for your timely and thoughtful responses.

NOT APPROVED BY THE CRB

GCR

None.

FORMULA

None.

GRAND TOURING

GT1

1. #6850 (Mr. Moreno) Rules

Thank you for your requests. Please submit the manufacturer's information and specifications for the cylinder head you are requesting for further review of your request. You may not run the engine block you have requested. You may not run a 275 cubic inch V8 small block Chevy at 2430 lbs.

GT3

1. #7449 (Roger Welling) Engine Classification - Nissan L28

Thank you for your request. The requested engine's performance potential exceeds the parameters of GT3.

GTL

1. #7231 (Gary Johnson) Change Specification Line – Mini

Due to the unique engine/transmission architecture of the FWD Mini this weight differential is deemed proper. The factory FWD power unit layout has inherent compromises due to the nature of the common sump oil pan. Proper oil control (scrapers/ windage trays) is not fittable. Dry sumping is not an available option, and because the transmission and transfer gears share the same oil as the engine, higher base oil viscosity must be used. In the RWD platform these performance limitations can be properly addressed through normal race engine building procedures. Additionally, due to the nature of the FWD flywheel/clutch set up, although light weight parts are available, they are heavy when compared to what can be achieved for RWD application. This performance difference is based on many years of insight gained when Mini's were racing in large quantities within GT5. We have not seen such disparities in performance between FWD and RWD variants in other manufacturers.

SUPER TOURING

ST

1. #7595 (David Mead) Classification of Solstice/GXP with Hardtop

Thank you for your input. Please see letter #7616 (Technical Bulletin).

STL

1. #7508 (Christopher Childs) Increase Wheel Width – STL

Thank you for your input. The current wheel size is appropriate for STL.

STU

1. #7406 (John De Barros) Reduce Weight and Restrictor WC Mazda 6

Thank you for your input. The World Challenge classification is weighted correctly. If the competitor would like to convert the car to STU specifications, then it will compete at a lower weight.

IMPROVED TOURING

None.

PRODUCTION

ALL

1. #7312 (Rich Rock) Vacuum System Rule Clarification/Explanation Request

Thank you for your request. There is no need shown for these systems and they create a safety issue if they malfunction.

2. #7360 (Bill Blust) Create a "Runoffs Spec"

Thank you for your suggestion. The creation of specifications unique to the Runoffs venue would be an extraordinarily complex task with a great potential for creating perceived advantages to specific cars. Additionally, although Road America is considered a horsepower track, there are a number of examples from the 2009 through 2011 Runoffs in production that indicate Road America is as much about handling as it is about power.

EP

1. #7227 (Joe Boruch) Classify all S2000 Years on One Specification Line

Thank you for your request. Sufficient differences exist among the cars covered by the years listed on the specification lines to warrant separate specification lines.

AMERICAN SEDAN
None.

SHOWROOM STOCK
SSB
1. #7230 (Chris Dryden) Give the MX-5 More Power
Thank you for your request. Due to the plans for 2013 to re-classify all SS and Touring cars into 4 Touring classes, the CRB has no plans to make performance adjustments in 2012 for SS and Touring cars beyond the purview of Technical Bulletins (such as weight changes). The CRB recommends that, if after your car is classified in one of the Touring classes for 2013, you believe your car needs a competition adjustment, you should submit another letter requesting an adjustment, at that time.

B-Spec
1. #7423 (Mike Allen) Modify / Replacement of Engine Mount #1.
Thank you for your request. The current B-Spec ruleset does not allow for replacement engine bushings.

SPEC MIATA
SM
1. #7457 (Jim Drago) Allow removal of Heater/AC Controls
9.1.8.C.2.g is adequate as written. The CRB has no plans to allow the removal of heater controls in SM.

SPORTS RACING
None.

TOURING
T2
1. #7352 (Marty Grand) Spring Request for EVO
Thank you for your input. The CRB does not recommend spring changes at this time; however, there have been recent changes in T2 to balance the class.

2. #7460 (Marty Grand) Enlarge Restrictor - T2 EVO IX
Thank you for your input. Please see letter #7352.

3. #7461 (Marty Grand) Weight Reduction T2 EVO
Thank you for your input. Please see letter #7352.

T3
1. #7626 (Club Racing Board) Not Recommended Portion of Letter #7431 (Technical Bulletin)
Thank you for your letter. The CRB does not recommend a carbon hood for this car and does not recommend taking away the 25 lb weight penalty for the aluminum driveshaft.

PREVIOUSLY ADDRESSED
GCR
None.

FORMULA
None.

GRAND TOURING
GT2
1. #7179 (Club Racing Board) Clarify 997 cup car restrictor location
Please see letter #6880, March 2012 Fastrack (Technical Bulletin).
2. #7191 (Robert Murillo) Nov 2011 Fastrack, 2012 GCR question - Porsche 997 cup
Please see letter #6880, March 2012 Fastrack (Technical Bulletin).

GT3
3. #7622 (Club Racing Board) Previously Addressed Portion of Letter #7448 (Technical Bulletin)
Thank you for your letter. Please see March 2012 Fastrack (Technical Bulletin) letter #7066 for the GT3 VG30 engine information.

SUPER TOURING
STL
1. #7487 (Don Wiseman) Preparation Specifications
Thank you for your letter. Please see letter #6957 (Technical Bulletin), March 2012 Fastrack. A vehicle may be prepared to either IT specifications or ST specifications. Weight as raced is based on which specification the competitor chooses for the

race preparation.

IMPROVED TOURING
None.

PRODUCTION
None.

AMERICAN SEDAN
None.

SHOWROOM STOCK
None.

SPEC MIATA
None.

SPORTS RACING
None.

TOURING
T3
1. **#**7439 (Cheyne Daggett) 1 Piece Drive Shaft Mustang V6 - T3
Please see letter #6943 March 2012 Fastrack.

NO ACTION REQUIRED
GCR
None.

FORMULA
None.

GRAND TOURING
GT
1. (Multiple, 23 letters) GT Philosophy
Please see letter #6979.

GTL
1. #7167 (Bob Clark) Question on Tech Bulletin #TB12-02
Thank you for your question. As a result of the confusion of this particular rule at the 2011 Runoffs, the CRB has reviewed the language for 9.1.2.F.4.b.2 and made adjustments to bring the wording in line with the intent.

2. #7245 (Chris Bovis) Return to 2010 Specifications
Please see response to letter #7242 (Technical Bulletin).

SUPER TOURING
STL
1. #7588 (Dana Hullinger) Clarification ITA cars racing in STL
Thank you for your question. Displaying the ITA weight is sufficient for both classes.

STU
1. #7617 (Club Racing Board) Solstice fuel tank
Please see letter #7616 (Technical Bulletin).

IMROVED TOURING
None.

PRODUCTION
None.

AMERICAN SEDAN
None.

SHOWROOM STOCK
None.

SPEC MIATA
SM
1. #6478 (Tom Sager) Sleeved Block Rule

Thank you for your letter, however the CRB feels that the rule is adequate as written and does not feel extending the life of sleeves is a decision that is best for the class.

SPORTS RACING
None.

TOURING
T1
1. #7434 (Jason Berkeley) Do Not Restrict LS3 C6

Thank you for your input. There is no current plan to restrict the LS3 for 2012. All Touring cars will undergo scrutiny and adjustment for capability within the Touring re-classification effort to be effective for 2013.

RESUMES
None.

CLUB RACING TECHNICAL BULLETIN

DATE: March 20, 2012
NUMBER: TB 12-04
FROM: Club Racing Board
TO: Competitors, Stewards, and Scrutineers
SUBJECT: Errors and Omissions, Competition Adjustments, Clarifications, and Classifications

All changes are effective 3/30/2012 unless otherwise noted.

GCR

1. #6400 (Todd Green) Seeking rules clarification/suggestion for Spec Miata
In 9.3.24, add the following to the end of the paragraph: "*Insulation or heat-resistant material may be added to the interior (cockpit) surfaces of the firewall, floor, and transmission tunnel.*"
(Please see letter #7625, Minutes for Recommended Rule Change portion of this letter).

2. #7597 (Barry Kaplan) Errors and omissions
In GCR section 5.4.2.A.1, clarify the paragraph as follows: "There will be a Chief Medical Official who is either: 1) Physician, MD or DO, preferably with an EMS background and licensed to practice in at least one (1) state or, 2) Paramedic or equivalent (advanced life support technician) with an active license *or certification for the state in which they are operating,* or, 3) PA (Physicians Assistant) or APN (Advanced Practice Nurse) trained and experienced in EMS and emergency medicine with an active license. The Chief Medical Official may be a person contracted with the track, and not an SCCA member, but he must coordinate with the Chief of ES. At the Runoffs the Chief Medical Official must be a physician."

3. #7664 (Club Racing Board) Clarify roll cage mounting points.
In GCR section 9.4.E.1, clarify the paragraph by removing the following language: "Improved Touring, Showroom Stock, Spec Miata, B-Spec AND Touring classes–The roll cage must attach to the vehicle structure ~~(floor pan/ rocker boxes/ sills)~~ within the passenger compartment in a minimum of 6 points and a maximum of 8 points as specified in these rules. Roll cage may not pass through any structural member, except Miata rear main hoop braces may pass through the package tray."

Formula/Sports Racer
SRF

1. #7676 (SCCA Staff) Correct Tire Specification
Effective immediately, in SRF, Spec Racer Ford Specifications, Chassis, section 9.1.9.C.F, clarify the section as follows:

"Effective 2/1/12 Tires:
Dry: Goodyear Eagle "Spec Racer Ford"; size 22" x 7" x 13", Model D2525. Wet: Goodyear Eagle "Spec Racer Ford"; size 22" x 7" x 13", Model D2626.
Wet: Part number D2524 ~~is~~ *and D2624 are* permitted in Regional races only through the end of 2012."

Grand Touring
GT3
1. #6986 (Ricardo Velez) List 4G93 1,834cc engine
In GT3, Acura engines, classify the 4G93 engine as follows:

Engine Family	Engine Type	Bore x Stroke (mm)	Disp. (cc)	Head Type	Valves / Cyl.	Fuel Induction	Weight (lbs)	Notes
4G93	*DOHC*	*81mm x 89.0 mm*	*1834*	*Crossflow-aluminum*	*4*	*Unrestricted*	*2060*	*Direct injection not allowed*

2. #7350 (Kirk Olson) Weight Reduction for Smaller Displacement Engines
In GT3, all 1600cc engines, reduce the weight as follows: ~~1855~~ *1790*

In GT3, all 1500cc & under engines, reduce the weight as follows: ~~1790~~ *1740*

3. #7448 (Roger Welling) Corrections - Nissan Engines
In GT3, Nissan Engines, clarify the VG30 spec line as follows: 87.0 x ~~77.2~~ *83.0*, Disp ~~2754~~ *2960*, Alum, ~~Non-~~Crossflow

GTL
1. #7182 (Bobby Lentz) Classify the 1975-79 Nissan 200sx in GTL
In GTL, Nissan cars, classify the 200SX as follows:

Model	Years	Body Style	Drive-line	Wheel-base (in)	Notes
200 SX	*1975-79*	*2DR*	*RWD*	*92.0"*	

2. #7242 (Bob Clark) Adjustment of SIR size for 1500-1600cc multi valve engines
In GTL, All 4V engines with a displacement of 1500cc-1600cc, increase the SIR size as follows: ~~23mm~~ *23.5mm*

3. #7429 (Peter Zekert) Allow A16 engine with identical specs as classed E16 engine
In GTL, Nissan/Datsun engines, classify the A16H as follows:

Engine Family	Engine Type	Bore x Stroke (mm)	Disp. (cc)	Head Type	Valves / Cyl.	Fuel Induction	Weight (lbs)	Notes
A16H	*OHV*	*76.0mm x 88.0 mm*	*1597*	*Non Crossflow*	*2*	*25mm SIR*	*1950*	*Must use A14/15 "A" series block. Must use non crossflow "A" series cylinder..*

4. #7432 (Peter Zekert) Consider 3 valve engines separate from 4 valve in SIR & Weight
In GTL, all 3 valve engines, increase the SIR as follows: ~~23.0~~ *24.0*

Improved Touring
None.

Production
1. #7663 (Club Racing Board) Errors and Omissions, Change to 9.1.5.E.6.h.1
In section 9.1.5.E.6.h.1, change paragraph as follows: "Screens, block-off plates or tape that serve only to protect or restrict air flow to the radiator(s) and/or oil cooler(s) are unrestricted, but must be located a minimum of 2" behind the ~~stock~~ radiator/cooler opening *or behind the stock grill.*"

EP
1. #7523 (JOHN NORRIS) CLASSIFY CAR 325is EP
In EP, classify the 1992-1995 BMW 325i/is as follows:

EP	Prep. Level	Weight (lbs.)	Engine Type	Bore x Stroke mm.(in.)	Displ. cc./(ci)	Block Mat'l	Head/PN & Mat'l	Valves IN & EX mm/(in.)	Carb. No. & Type	Wheelbase mm/(in.)	Track (F/R) mm/(in.)
BMW 325i/is E-36 (92-95)	*2*	*2525 * 2588 ** 2651*	*6 Cyl. DOHC*	*84 x 75*	*2494*	*Alum or iron*	*Alum*	*(I) 35.0 (E) 30.5*	*Fuel injection*	*106.3*	*59.6 / 60.1*

EP	Wheels (max)	Trans. Speeds	Brakes Std. (mm/(in.))	Brakes Alt.: mm/(in.)	Notes:
BMW 325i/is E-36 (92-95)	*15x7*	*5*	*(F) 286 vented (R) 280 solid*		*Comp. Ratio limited to 12.0:1, Valve lift limited to .500".*

Super Touring
STO
1. #7177 (Robert Zecca) Please classify the Grand AM spec Audi R8 in STO
In STO, classify Audi R8 as follows:
Displacement: *5200*
Min. Weight: *3200*
Restrictor Two flat plate restrictors: *40.5mm*
Notes: "*Must meet February 2012 Grand Am Specs. Must meet 9.1.4.P.1 for tire requirements.*"

STU
1. #6952 (david mead) allow 13b bridgeport
In section 9.1.4.2.I.1, classify the Mazda 13B by adding the following sentence: "*The Mazda 13b bridge port engine is allowed with stock fuel injection or automotive 2 barrel carb with 44 mm chokes at 2600 lbs.*"

2. #7512 (Eric Nummelin) Allow Cougar into STU Using 2003 World Challenge VTS
In STU, add the 96-00 Contour/Cougar to Table B as follows:
Min. Weight: *2750*
Restrictor: *none*
Notes: "*Must conform to 2003 World Challenge VTS.*"

3. #7616 (Club Racing Board) Solstice Hard Top
In STU, classify the Pontiac Solstice and Saturn Sky as follows:
Max. Displacement: *2400*
Min Weight "*Chart*"
Notes: "*May use hardtop GM PCS-0664 or equivalent aftermarket. May compete with stock fuel tank.*"

STL
1. #7530 (Greg Amy) E&O: Exclude Improved Touring R cars from STL
In GCR section 9.1.4.B, third bullet point, clarify the second sentence as follows: "GCR listed ITS, ITA, ITB, and ITC cars of 2 liters and less engine displacement, 1985 and newer, may compete in STL under their current IT specifications."

2. #7615 (Club Racing Board) S2000
In section 9.1.4.3.D.1, remove the Honda S2000 ineligibility as follows: ~~Honda S2000~~

American Sedan
1. #7514 (Club Racing Board) Add vehicle years to current for Ford Mustang GT (Full Preparation)
In AS, Ford Mustang GT (05-09), change the model years as follows: (05-~~09~~ *13*)

Spec Miata
1. #7319 (Club Racing Board) Clarify ducting rule
In section 9.1.8.C.7.i, clarify the second paragraph as follows: "To improve driver exit through the window area, the driver vent window and vent window supporting frame may be removed as a*n* ~~pair~~ *assembly*. If removed, ducting may be in the passenger side vent window only."

2. #7361 (Jim Drago) Correct rule on final drive ratio
Change 9.1.8.C.3.a: a. ~~Any 1990-2005 Miata transmission and required items for conversion may be used.~~ All cars shall only use the 5 speed transmission and the 4.3 differential ratio. Transmission gear ratios must be stock. All cars may use the stock 4.3 unmodified OEM open differential or one of the approved alternates listed below.

Change 9.1.8.C.3.c: c. 1994 and newer cars may use the stock limited slip (Torsen *or Tochigi Fuji*) differentials from 94-05 models. ~~Stock~~ *4.3 gear ratios* ~~-~~must be retained.

Change 9.1.8.C.3.d: d. The 90-93 Miatas may convert to the 94-05 differential assembly and must retain the 4.3 differential gear ratio. ~~From the 99-05 model years.~~ This conversion includes the driveshaft and half-shafts. The original 90-93 model rear suspension uprights must be retained.

Touring/Showroom Stock
T2
1. #7431 (Cheyne Daggett) Reduce the Weight T2 Mustang V6
In T2, Ford Mustang V6 (11-12), change weight as follows: ~~3500~~ *3400*
(Please see letter #7626 in the minutes for the not recommended portion of this letter)

T3
1. #7440 (Cheyne Daggett) Tire Size Mustang V6 - T3
In T3, Ford Mustang V6 (2011-12), change the tire size as follows: ~~245 (max) (F&R)~~ *255 (max) (F&R)*

B-Spec
1. #7539 (T-SS Committee) Honda Transmission ratios
In B-Spec, Honda Fit (09-12), change the gear ratios as follows: ~~3.00, 1.68, 1.07, 0.76, 0.55~~ *3.31 1.87 1.30 0.95 0.73* change the final drive as follows: ~~4.56~~ *4.62*

2. #7540 (T-SS Committee) Crash bolt at control arm pivot - remove
In 9.1.7.1.E.35, clarify the paragraph as follows:
"Maximum 2.5 degrees negative chamber is allowed on front and rear suspensions. Strut suspensions may adjust camber ~~wheels by the use of eccentric bolts (crash bolts) at control arm pivot points,~~ by the use of ~~eccentric bushings~~ eccentric bolts (crash bolts) at the strut-to-spindle, and/or by use of slotted adjusters at the top of the strut mounting plate. If upper strut slotted plates are used, they shall be located on existing chassis structure, utilizing the manufacturer's original bolt holes and may not serve as reinforcement for that structure. On other forms of suspension, camber adjustment may be achieved by the use of shims and/or eccentric bolts (crash bolts)."

CLUB RACING MEMORANDUM

The 2012 National Championship Runoffs Schedule and Supplemental Regulations will be posted to the Runoffs web page by March 31, 2012. Go to www.scca.com/runoffs to find the information.

SOLO EVENTS BOARD

SOLO EVENTS BOARD | February 18-22, 2012

The Solo Events Board met in Kansas City February 18-19, and by conference call February 22nd. Attending were SEB members Dave Feighner, Bryan Nemy, Steve Hudson, Mike Simanyi, Erik Strelnieks, Richard Holden, and Dave Hardy; John Walsh and Lisa Noble of the BOD; Doug Gill, Ryan Miles, John Bauer, Howard Duncan, and Brian Harmer of the National Staff. These minutes are presented in topical order rather than the order discussed.

Unless noted otherwise the effective date for all rule, class, and listing change proposals herein is 1/1/*2013*

Comments regarding items published herein should be directed via the website www.sebscca.com.

GENERAL

- The Divisional Solo Events Steward position for the Midwest Division is open. Members interested in this position are invited to submit their qualifications in writing to the SEB.
- The following rule change proposals are submitted for member review and comment:
  - In 3.1, in the paragraph beginning "As an alternative to SSF...", delete the second sentence. (#6398) Comment: The rollover percentage value is not considered to be sufficiently consistent to be useful in this context.
  - Replace 1.3.2.K with the following (adapted from the GCR):

    1. No driver may consume alcohol until they have completed all their runs and completed their work assignment for the day. No official may consume alcohol until his duties have been completed for the day. Anyone who has consumed any alcohol on the day of an event, other than following the conclusion of his activities, shall not participate on that day, may be excluded from the balance of the event, and may be penalized as specified in Section 9. Alcohol may not be consumed in the grid until after all the day's competition activities are concluded.

    Nothing in this section shall override site-specific alcohol restrictions.

    2. The use at an event by any participant of any federal Schedule 1 controlled substance (including marijuana), or other drugs that affect the ability of the participant to safely participate in the event or may otherwise adversely affect the safety or integrity of the event, is specifically prohibited. Any participant who violates this prohibition

    • shall not seek to participate in the event

    • may be excluded from the event by the event chairman

    • may be removed from the grounds by the order event chairman or chief steward

    • may be penalized as provided in Section 9.

    As a condition of continued participation, the participant may be required to submit to such testing procedures as may be established by SCCA in its sole discretion. Failure or refusal to submit to such testing shall be deemed a violation of the above prohibitions. However, SCCA assumes no obligation or duty to establish such testing procedures and/or to test participants on a random basis or in a specific case. (#7606)
  - Delete Section 4.9 in its entirety. Comment: The SEB believes it can effectively serve the needs of the program by monitoring the class structures and participation levels, and dealing with issues on a case-by-case basis as they arise. (#5278, 5279, 5280, 5346, 5396, 5485)
  - The following proposed revised version of Appendix I is published here for member review and comment:

    Sound Measurements at SCCA National Solo Events

    The maximum limit will be 100 dBA.

    The measurement will be taken at a point where the vehicle can reasonably be expected to be under load at full throttle. The measuring point will be 50 feet from the edge of the course using an ANSI Type 2 sound meter set to "A" weighting, "Slow" response. The microphone will be 3 to 4 feet above ground level, positioned perpendicular to vehicle direction of travel. The microphone will be away from structures (e.g., buildings, etc.) as is practical.

    If a vehicle exceeds 97 dBA, the Chief Steward or his/her designated representative will be notified by the Sound Control Steward or representative. The Chief Steward or representative will notify the driver of any measurement

over 97 dBA.

If a vehicle exceeds 100dBA, the driver will be allowed an attempt to reduce the sound level of the vehicle before his/her next scheduled run that day. (A "mechanical delay" per Solo Rules 6.8.D may be used.) If a viable remedy has been attempted in the judgment of the Chief Steward or representative, the driver will be allowed a "second chance" for the next scheduled run. If the driver declines any "repair action" or the "repair" is deemed inadequate by the Chief Steward or representative, the driver will forfeit all subsequent runs in the vehicle (unless an adequate "repair action" is completed before the next scheduled run). If the vehicle exceeds 100 dBA again on the "second chance" run, the driver will be allowed another attempt as before to reduce the sound level. The Chief Steward or representative may approve a final "third chance" run after another remedy to reduce the sound level. If the limit is exceeded on the "third chance" run, the run will be scored a DNF.

Any "repair actions" to reduce the sound level of a vehicle may not be removed (including the next day of the event) and may be subject to re-inspection by the Chief Steward or representative. If the "repair" has deteriorated after passing the sound level requirements at the measuring point, it must be addressed again. The Chief Steward or representative has the right to disallow a repeat of the "repair action" that deteriorated. The "repair action" may be changed or modified to improve the quality of the "repair" and/or further reduce the vehicle sound level. Drivers that receive a DNF for non-compliant sound limits must make further "repair actions" to reduce the sound level to compliant readings before starting runs the next day.

These general sound limit regulations WILL NOT override specific local area and/or SCCA Regional sound limit requirements, regulations, and/or penalties.

- The SEB is seeking member input regarding possible changes to Appendix C, for 1/1/2014 at the earliest, which would address the following issues:
  - Require a main hoop diagonal brace for all roll bars.
  - Require Appendix C compliant roll bars in closed cars in Prepared and Modified categories.
  - Require side impact protection in all cars using doors of alternate materials, and in all cars in which door beams have been removed.
  - All required bracing must be of at least the same size tubing as the main hoop.
- The SSC and SEB have reviewed the following items, and thank these members for their input:
  - # 6536, race track events. National-level events are subject to the same safety approval requirements as Regional events.
  - #6398, SSF value application.

TIRE RACK SOLO NATIONALS

- The SEB has approved the addition of Supplemental Classes RTF, RTR, and RTA, and their associated L classes, to the 2012 Solo Nationals.

STOCK

- The following rule change proposal has been recommended by the SAC and is submitted for member review and comment:
  - Change the last sentence of 13.8.B to read: "However, no suspension part may be modified for the purpose of adjustment unless such modification is specifically authorized by the factory shop manual." (#6537, #6726, #7223) Also remove from Appendix F, under STOCK CATEGORY CLARIFICATIONS, the item titled "PORSCHE STRUT ORIENTATION."
- The SAC and SEB have reviewed the following items, and thank these members for their input:
  - # 7109, Mini Coupe. This model was newly classed in the February Fastrack.
  - #7129, #7147 VW Golf R. This model was newly classed in the March Fastrack.
  - #7144, BMW 1M Classing. This model is presently classed in AS.

STREET TOURING

- The STAC and SEB have reviewed the following items, and thank these members for their input:
  - #7203, Toyo tire exclusion. Comment: the SEB and Tech Services Department are continuing to investigate issues related to ST tire requirements. The objectives for any changes to the tire eligibility rules, and/or the ST tire exclusion list, will be to encourage the use of tires that provide longer wear, greater availability, and differentiation from R compound tires.
  - #7226, Acura NSX. The STAC believes its previous decision regarding this car remains valid.

- #7428, VW Golf TDI. This car has already been classed as a result of item #5386; see the March Fastrack.

STREET PREPARED

- The SPAC and SEB have reviewed the following items, and thank these members for their input:
  - #7201, Motor Mounts
  - #5439, #5541, #6093, #6231 BMW Classing
  - #5884, #6101, SP Reorganization Comments
  - #7015, 300ZX Classing

  Note: Due to the recent Street Prepared classing structure reorganization, and the introduction of class SSP, the SPAC feels that more information and experience with the new structure are necessary before considering further specific reclassifications. The committee will be monitoring event results for additional applicable data.

STREET MODIFIED

- The following rule change proposals are being submitted by the SEB for member review and comment:
  - Change class SMF from Supplemental status to National status (#6087). Comment: this change is contingent upon continuation of the participation growth which has been observed in this class.
  - Change the class name designation of SM to be SMX.
  - Delete the following from 16.1.I: "***This does not permit removal of the remainder of the window washer system.***" Also change the second sentence in 16.1.I as follows:

    "Associated hardware including latches, hinges, *window washer nozzles and window washer reservoirs* may be modified, removed or replaced." (#6715)
- The SMAC and SEB have reviewed the following item, and thank this member for the input:

  #6724, Engine Swaps

PREPARED

- The PAC recommends the following rule change proposal be published for member comment.
  - Add the following subsections to 17.2.P:

    3. All OE rear wings and rear spoilers may be removed.

    4. Vehicles equipped with an OE rear wing may add a rear spoiler only if the OE wing and wing attachments are first removed.

NOT RECOMMENDED

Safety

- #7041, alternate helmet standards. The referenced European standard is based on motorcycle use and, as noted in Fastrack last month, is not believed to meet requirements which are comparable with those of the standards referenced in 4.3.1.
- #7359, height requirement for minor passengers. Per the SSC, the current requirement for properly fitting restraints and helmet (1.3.2.D.3)addresses this issue. Regarding the age of passengers, the minor waiver information contains the date of birth.

Street Touring

- #6930, AWD Tire Size Proposal. The STAC believes that rules stability is a priority, and that the existing tire width limits are appropriate.
- #7127, Treadwear Rating. This concept was presented to the membership two years ago and was met with negative member feedback. No significant changes have occurred in the street tire market since that time to suggest any necessary change.
- #7186, Neon Classing. The STAC believes that Neons are appropriately classed in STC.
- #7273, STC and STF Classing. Per the STAC, the current "NOC" listings preserve classing stability.
- #7291, Sensor Proposal. Per the STAC, this change would not be consistent with category philosophy.
- #7353, Steering Wheel. Changing to an alternative steering wheel of this type is not considered consistent with category philosophy.
- #7354, Oil Filler Cap. Per the STAC, 13.10.G provides for oil catch tanks.

TECH BULLETINS

Stock

1. Add to 13.4, first paragraph: *Tire pressure monitoring sensors may be removed*. (#7128)

2. The following new listings, effective immediately upon publication, have been recommended by the SAC and approved by the SEB:

   Lotus Evora S (2011-12) SS (#7145)

3. Per the SAC, the 2010-2012 Ford Taurus SHO is covered the the existing listing in GS. (#7198)

4. Per the SAC, the following listing cleanup/clarifications are provided:

   From:
   HS:
   Nissan
   Sentra (1982-90)
   Sentra (1.6L) (1991-99)
   Sentra (1.8L) (2000-06)
   Sentra SE (2.0L) (1995-99)
   to:
   HS:
   Nissan
   Sentra (NOC) (1982-2012)

   From:
   HS:
   Subaru
   Legacy 2.5 GT
   to:
   HS:
   Subaru
   Legacy *(NOC)*

Street Touring

5. Per the STAC, clarify 14.10.F, 5th sentence, to read as follows:

   "Any ***OE*** OBD communications port functionality must remain."

Note: This removes confusion surrounding the word "standard", which was intended to refer to 12.4 Standard Part, but could also be misinterpreted to mean OBDII industry standards. The restriction requires any and all OE port functionality to remain, not just delivery of common OBDII codes and readiness functions. (#6963)

6. Per the STAC, clarify 14.10.F by adding the following to the first paragraph:

   Only the OE sensors may be used for engine management.

Note: Additional sensors do not meet the requirements of 14.10.3, nor is their connection to either ECU or piggyback allowed via additional wiring. Further, use of additional sensors in the intake tract violates 14.10.C, if these sensors are used for engine management. (#6978)

7. The following new listings, effective immediately upon publication, have been recommended by the STAC and approved by the SEB:

   Chevrolet Sprint (1985-88) STC (#7005)
   Subaru Impreza 2.0i (2012) STF (#7030)
   Dodge SRT-4 (2003-05) STX (#7079)
   Porsche 911 SC (3.0L) (1978-83) STR (#7119)
   Toyota Matrix (2003-12) STF (#7297)
   Subaru Legacy GT (2005-08) STX (#7299)
   Kia Rio (2012) STC (#7371, #7416))
   Note: the projected performance of this car is outside that of the target cars in STF.
   Hyundai Accent (2012) STC (#7371)
   Note: the projected performance of this car is outside that of the target cars in STF.

8. Per the STAC, clarify 14.10.E by adding the following:

   "*The extents of an OE converter are defined by the expansion chamber in which the catalyst is contained, regardless of placement within larger exhaust sections.*"

Note: A converter welded into an exhaust manifold or long section of exhaust tubing does not begin/end at the inlet/outlet of that

larger piece.

9. Errors and Omissions (#7288): The following listing corrections have been provided by the STAC:

   The Ford Fiesta listing in STF should read “Ford Fiesta (2011-12)”
   The BMW 3 Series E90 listing in STX should read “3 series (E9x chassis, non-M, non-turbo) (2006-12)”
   The BMW 3 Series E90 listing in STU should read “3 series (E9x chassis, NOC incl. M3) (2006-12)

10. Errors and Omissions (#7438): Due to an editing oversight, wording was omitted from 14.10.D. It should read as follows:

    “Exhaust manifolds and headers (including downpipes) may be replaced with alternate units. Relocation of the oxygen sensor on the header is permitted. Alternate oxygen sensors, including heated types, are permitted. This allowance does not permit relocation of the catalytic converter (see 13.10.E). Exhaust heat shields which cover only (and attach solely to) the header/manifold/downpipe are considered part of that component and may be replaced, removed, or modified. All other exhaust heat shields may be modified the minimum amount necessary to accommodate allowed alternate exhaust components. *Mounting brackets/hardware which serve no other purpose are considered part of the exhaust components.”*

<u>Street Prepared</u>

11. The following new listing, effective immediately upon publication, has been recommended by the SPAC and approved by the SEB:

    MINI Cooper S (all except Countryman) DSP (#4305)

12. Per the SPAC, the Acura NSX listing in the reorganization proposal was intended to be placed in ASP, not SSP. The correct classing is as follows:

    Acura NSX (all) (1990-2005) ASP (#6884)

13. Per the SPAC, the mount between the firewall and transmission on a Subaru, commonly called a “dog bone,” would be considered a transmission mount under the SP rules. Therefore Section 15.10.J would apply to changes to this mount. (#7155)

14. Errors and Omissions: The reference to 13.2.H in Section 15.2.J.1 should be updated to reference 13.2.I.1. (#7467)

<u>Street Modified</u>

- The SM rules permit the replacement of the bumper cover and fenders (see 16.1.I). The replacement may consist of a one-piece assembly. (#7349)

RALLYCROSS BOARD

RALLYCROSS BOARD MINUTES | March 1-3, 2012

The RallyCross Board (RXB) met at the National Convention in a split session on March 1 and March 3. Attending were Ken Cashion, Chairman, Bob Ricker, Brent Blakely, Karl Sealander, Warren Elliott, Stephen Hyatt and Ron Foley. Other attendees were Howard Duncan, Brian Harmer and Sandi Brown from the National office.

The Secretary acknowledges that these minutes may not be in chronological order.

Old Business

1. Growth discussion—next steps:
   a. Regional Program Development Assistance (Stephen Hyatt): Howard Duncan has granted pre-approval from National office for $350 discretionary travel assistance per Division. A RallyCross program development packet based on the Northeast Division packet and the Solo packet is being developed with the National office assistance; it should be ready for distribution within 3 months. Discussion: Do the current Divisional boundaries fully serve the currently active RallyCross programs? Divisional Stewards should be able to provide quality assistance to the Regional programs, preferably through personal visits. To increase the lines of communication between the RXB and the Divisional RallyCross Stewards, each Divisional Steward will be paired with an RXB member as follows: Ken Cashion – ZB Lorenc; Bob Ricker – Paul Eklund and Dustin Nevonen; Brent Blakely – Charles Wright and Richard Miller; Karl Sealander – Scott Beliveau; Warren Elliott – Aaron Miller and Jayson Woodruff; Ron Foley – Jerry Doctor. Stephen Hyatt suggested developing a RallyCross volunteer incentive program organized through the National office that would discount membership dues through a points system. Such a program could be helpful in growing and encouraging non-competitor involvement. As an incentive to introduce new competitors and grow a RallyCross program, Regions could give a free event entry to any regular competitor that brings a new competitor.

   b. Rules Evolvement for Relevance and Accessibility (Warren Elliott): The question was raised about whether our methods of classing made sense or not, and if not, is there a better approach. A points system to determine vehicle classing, for example, may avoid having certain vehicles becoming “the car to have” in a particular category. The discussion led to the general sentiment of trying any such changes in an exhibition class first. Discussion: Possibly providing a Tuner Category (previously referred to as Street Modified) as a supplemental or exhibition class in 2012. A rules package would need to be quickly developed for the first National Challenge event. In an effort to make the 2012 RallyCross Rules more user friendly and clear, Article 6.2.D.21 will be moved to 6.2.D.4.c. This will be addressed in a revised edition of the 2012 RallyCross Rules.

   c. Marketing and Communications Plan—Pathways (Ron Foley): RallyCross needs a new strategy to reach the younger demographic. RallyCross could take advantage of more columns in *SportsCar* magazine than just *On Rallying*. One idea suggested for *SportsCar* content is RallyCross site bios with pictures and technical information from the featured site. There is a big need to find good writers to provide interesting content. Sandi Brown suggested looking for writers outside the RallyCross community. Use of resources outside SCCA, print and otherwise, should also be considered. Marketing resources need to be innovative. Rallycross could initially take advantage of what marketing opportunities the SCCA offers.

   d. National Program Enhancements (Ken Cashion): The National Supplemental Regulations need to define a DNS (Did Not Start) penalty. A penalty of the slowest time in class/run plus 60 seconds was agreed upon. Is switching cars during competition a problem? Camaraderie within the sport is an important aspect to take into consideration. Possible solution might be to define a penalty for switching cars. The committee will review the clarity of the debead rule language in the Supplemental Regulations at a later committee meeting.

2. Committee Composition/Recruitment (Warren Elliott): Several names were presented for consideration for the Safety, Rules, Marketing, and Championship committees. The committee chairmen will contact those individuals named to invite their participation on their respective committees.

3. Court of Appeals Selection (Stephen Hyatt): The standing Court of Appeals for 2012 will consist of Stephen Hyatt, Charles Wright, and Tom Nelson. Alternates are Ron Foley, Scott Beliveau, and Eric Genack.

New Business

1. Year in Review: The RXB reviewed the minutes from the prior year to identify items that may not have received a complete follow-up. Following are those items and their status: Program packet—currently in process; electric cars—currently in rules; protest period—added as a supplemental regulation; marketing and promotional award—videos, website, articles,

etc., which the Marketing committee will address; mandatory regulations—need to be standardized; safety presentation—needed for Safety Steward trainings; safety bulletin dated 2/10/11—should be rereleased on website and forums; incident reports—possible safety bulletin to stress when to submit; merging of RallyCross and Solo Safety steward training—has worked previously and will be stressed by the Safety Committee; proper sanction signatures—needs to be watched for 2012; checking of driver's licenses and memberships at event registration—a need for more registrar training and better connection to National office; minutes posting on Forums—Fastrack currently working in a timely manner.

2. RXB Member Perspective: How are things going? The Convention seminars and meetings have shown things are progressing smoothly. Committees are mostly staffed and are being better utilized.

3. B-Spec Allowance: A press release or tech bulletin to be released announcing that B-Spec cars from Club Racing are allowed to run in RallyCross in the Modified Front Wheel Drive Category (MF). Tire allowances will follow RallyCross Rules for that category.

Next meeting: April 4, 2012

Submitted by Karl Sealander, RXB Secretary

ROAD RALLY BOARD

ROAD RALLY BOARD MINUTES | March 2, 2012

The *RoadRally* Board (RRB) met at the SCCA Convention on March 2, 2012.

Attending were: Chairman, Jim Wakemen; members: Jeanne English, Chuck Hanson, Eva Ames, Sasha Lanz, Clarence Westberg and Rich Bireta; Deena Rowland and Howard Duncan, National Office; Bob Lybarger, Board of Directors Liaison.

Proceedings

1. AZ Rallies: English reported that she checked the upcoming AZ rallies, and that with the corrections they should be well received.

2. USRRC: 2012 USRRC: Due to conflicts, Detroit region has requested a date change to October 19-21; date change approved. We need to post the date change.
2013 USRRC: We are actively soliciting proposals for the 2013 USRRC; Eva will post.

3. Rally Program: We need to grow the Rally program, but how? The rallies need to be fun, easier, more accessible, easier for non-rally regions to start a rally program; we need to 'sell' the R.E.s that having a rally program is a bridge to other SCCA activities, that it can be used as a recruitment tool, particularly Social Rallies, and that the Mentoring Committee is there to help.

4. Experienced Based Categories and APP Class: Both have been posted to the SCCA Forum asking for comments and feedback.

5. Membership Changes: Howard reported that the Tiered SCCA membership is still being worked on; trying to determine what will best benefit members.

6. SCCA Marketing: SCCA has hired a marketing firm, Trozzolo's, to look at SCCA's marketing and branding; they will be contacting each Program to find out how they can help us.

7: Rally "Chapters"? The question came up about what to do if a region is not interested in having a rally program, but there are people who want to do rallies; can a Chapter be formed based on interest, for example at a college or by a car marquee? Howard reported that it would still need the region's approval; he suggested that the 'chapter' put in writing that the region would not be held financially liable; if that doesn't work, have the BOD Area Director talk to the R.E., and if that still doesn't work then contact Howard or Deena who will act as a third party to find out what the problem is.

8: Web Issues: Jim talked to Colan, Member Services, about online sanctioning, scoring, points keeping; Colan is developing a program that might work for our needs.

9. Photo Contest: Rick Beattie is working on a flyer; Rick is also getting a photo for the cover of the RRRs (the RRRs are ready to be printed, waiting on a cover photo).

Next meeting – via conference call, April 3, 2012.

ROAD RALLY BOARD

ROAD RALLY BOARD MINUTES | March 3, 2012

A *RoadRally* Town Hall meeting was held at the SCCA Convention on March 3, 2012.

Attending were: Chairman, Jim Wakemen; members: Jeanne English, Chuck Hanson, Eva Ames, Sasha Lanz, Clarence Westberg and Rich Bireta; Deena Rowland and Howard Duncan, National Office; Steve Harris, Board of Director Liaison.

Chairman Wakemen called the meeting to order at 8:05 am PST.

Proceedings

1. New Members: Jim introduced new RRB members Clarence Westberg and Rich Bireta.

2. USRRC: Need proposals for 2013 USRRC – Bruce Gezon volunteered Chuck Larouere/Steel Cities region; we will follow up on this and any other volunteers.
2012 USRRC, Detroit Region, dates are October 19-21.

3. APP Class and Experience Categories: Both have been posted on the SCCA Forum for comments. Rich demonstrated how his APP program works; Bruce Gezon will have an APP class on his National in August, Clarence currently offers an APP class on his rallies; some discussion on where this fits with other classes; we will watch how it is accepted and then make decisions.

4. From Bruce Gezon: Where is the RRB headed? What is being done to get newcomers? Bruce says that GTA rallies are good. The RRB needs to focus on regional, not national, events; maybe there should be two separate boards? The RRB needs to convince R.E.s that rally can be done year-round and is something to do when there is no racing. The Mentoring Committee is also there to help.

5. From Cheryl Babbe: The RRB should make subcommittees to do the work and then report to the RRB; the RRB agrees that this might be a useful thing to do, and will likely be doing so.

6. From Scott Beliveau: What about the Weekend Membership fees at Charity Rallies? For example, he has a car dealer picking up the expenses, but the dealer is not happy about the WM fees. Howard answered that the national office is open to any approach from the RRB to service our needs, build participation, and long term growth; for this particular situation, the WM fees can likely be waived as long as the info (names, addresses, etc) is collected and sent to Member Services

7. More from Howard: The BOD is working on tiered memberships and insurance fees; they want to see rally grow because it is an easy entry point and provides ease of membership. They are also working on branding, that the product is backed up by the branding.

Submitted by Jeanne English, RRB Secretary.

QUICK LINKS

The following items have been removed from regular inclusion in FasTrack News and can be found on SCCA's Web site at the following links:

CLUB RACING

Accredited Driver Licensing Schools: http://www.scca.com/clubracing/content.cfm?cid=50864
Forms: http://www.scca.com/downloads/#club
Technical Forms: http://www.scca.com/clubracing/content.cfm?cid=44472
General Competition Rules (GCR): http://www.scca.com/clubracing/content.cfm?cid=44472

SOLO

Forms: http://www.scca.com/downloads/#solo
Rulebook: http://www.scca.com/downloads/#solo

RALLY

Forms: http://www.scca.com/downloads/
Rulebooks: http://www.scca.com/downloads/

SCCA NATIONAL CONVENTION

Event page: http://www.scca.com/events/index.cfm?eid=3263

EVENT CALENDAR: http://www.scca.com/events/

Fastrack news
official SCCA member notification
EFFECTIVE FIRST DAY OF THE MONTH UNLESS OTHERWISE NOTED May 2012

CONTENTS

BOARD OF DIRECTORS	**NONE**
CLUB RACING	**1**
CRB Minutes	1
Technical Bulletin	33
Court of Appeals	36
Time Trials Admin. Council	None
SOLO	**40**
SEB Minutes	40
RALLY	**43**
RallyCross	43
RoadRally	NONE
LINKS	**45**

CLUB RACING BOARD

SCCA Club Racing Board Minutes | April 3, 2012

The Club Racing Board met by teleconference on April 3, 2012. Participating were Jim Wheeler, Chairman; Chris Albin, Fred Clark, Jim Drago, Peter Keane, Tom Start, Mirl Swan, and Pam Richardson, secretary. Also participating were: Todd Butler and Richard Patullo, BoD liaisons; Terry Ozment, Vice President of Club Racing; Doug Gill, General Manager, Technical Services Department; and John Bauer, Technical Manager, Club Racing. Jerry Wannarka, Chairman of the BoD participated as a guest. The following decisions were made:

SUGGESTED RULES FOR 2013

The following subjects will be referred to the Board of Directors for approval. Address all comments, both for and against, to the Club Racing Board. It is the BoD's policy to withhold voting on a rules change until there has been input from the membership on the presented rules. Member input is suggested and encouraged. Please send your comments via the form at http://www.crbscca.com/ or www.clubracingboard.com.

GCR

1. #7214 (Terry Ozment) 15-year old licensing change

Change Appendix C, GCR 2.6.G: G. A 15 year-old must complete his first SCCA driver school in a car *not classed in GT1, GT2, FA, FB, FS, ITR, STO, ASR, CSR, DSR, or T1.* ~~from one of the following classes: FV, FST, FF, SRF, SM, HP, T3, SSB, SSC, ITA, ITB or ITC.~~ Upon successful completion of the first school, any car may be used thereafter~~, or a regional-only class car of similar performance as determined by the Chief Steward~~.

Formula/Sports Racer

SR

1. #7811 (David Arken) National Class Management

Sports Racing Consolidation

Over the past few racing seasons, DSR's performance has improved, such that, at many tracks, DSR lap times are the fastest of any SCCA class. SCCA never intended this level to be the performance capability for DSR. This has resulted in almost identical lap times for CSR and DSR. However, by combining CSR and DSR, a significant performance gap would be created between SRF and CSR/DSR, suggesting a need for a class in Sports Racing between the two.

The recommended rule changes outlined below would address these two issues and reduce the number of Sports Racing classes by one. The philosophy is intended to re-create the clear three-step progression in performance in the Sports Racing categories of previous years. This philosophy is under development and does not yet include the requirement for a long term plan beyond the next 3-5 years. As the philosophy develops, the CRB will include attrition plans for classes that fail to thrive as well as plans for how new engines, technologies and parts will be accepted and proved. The classes will be re-named as follows: **SR1, SR2, and SR3. Current CSR and most DSR cars will be combined into SR1.**

Recommended rule change for 2013

SR1 - Current CSR and DSR cars combined into one class. This class would have open aerodynamic modifications and a performance potential with the current fastest CSR and DSR cars. Current CSR and DSR rules, with some modifications, will remain.

SR2 -There is room in this middle class for both the high volume manufacturer and the "home builder." This middle ground would still welcome innovation and creativity in a more managed fashion. Manufactured cars such as the S2000 and Stohr, and home built cars, would both be welcome. The final rule set would guarantee both types of cars would be competitive. Engine performance, and therefore costs, would be actively contained. The CRB is working diligently to accomplish this with the least expense to current competitors.

No under body aerodynamic modifications would be permitted behind the roll bar. In front of the roll bar, the current rules would remain in effect. Floors, tunnels and diffusers behind the roll bar will not be allowed. A flat tray under the engine will be permitted

with its only purpose to protect the engine.

The use of some materials would not be allowed. Also, specific application of some materials would be controlled such as:

- Brake rotors must be metallic materials only
- Carbon or titanium in the suspensions systems would not be permitted

Engines will be limited by methods such as:

- No turbo charging would be permitted
- Engine RPM will be limited to 13,000 rpm (beginning June 1, 2013)
- Maximum compression ratio of 13:1 (beginning January 1, 2014)

The CRB will write additional rules and restrictions before final implementation of this class.

Current DSR cars will have the option of moving down to SR2, with modifications required to restrict their performance to SR2 levels.

S2000 would not exist as a National class but the cars would become eligible for SR2.

The European rule set for S2000 (up-rated higher HP MZR, spec wing, etc.) would apply. Competition adjustments (including reducing weight) will be made based on track performance. The objective would be to bring the up-rated S2000 cars in performance parity with other SR2 cars within the 2013 competition year. This changes the performance potential of S2000 with the clear objective of complete inclusion and competition within SR2. There is no expectation that S2000 would regain National class status. A Regional, only, S2000 class could be a possibility.

SR3 – Formerly SRF, with current rules maintained.

Formula Consolidation

Recommended Rule Change for 2013

FE/FM beginning January 1, 2013

Combine FE with FM. It is felt that in the current racing environment one “spec” formula car class is sufficient to serve SCCA Club Racing.

- The single class will retain all of the “spec” concepts embraced by both groups
- Both groups retain their cars in current form and there is no attempt to mold one into the other
- The combined class would be the third largest in Club Racing and the largest formula car class, even surpassing FV
- Lap times at different tracks are close but, most importantly, both groups make their lap times in similar fashion at the same place on the track and will race well together
- Runoffs trap speeds at Road America are very close
- The CRB acknowledges that FE may have a slight advantage with its more modern suspension and, if necessary, the CRB will use competition adjustments to level the playing field
- FM competition is highly “Regionalized;” therefore, combining the 2 classes will provide a more diverse National presence for the single class
- In 2011 FE had 16 Runoffs entries while FM had only 13. The combination would provide an enhanced Runoffs experience for both groups

SRF
1. #7657 (Mike Davies) Rear/Tail minimum weights
Change Minimum Rear weight requirement in 9.1.9.C.5: Rear ~~30~~ *27* lbs.

Grand Touring
GTL
1. #7462 (Kyle Disque) Grill opening clarification
Add to GT-2, GT3, GTL rules: 9.1.2.F.4.h.6: *Radiator intake and brake openings may be covered with screen and/or taped as necessary to protect the radiator and/or regulate air flow.*

Super Touring
ST
1. #7402 (Club Racing Board) Allow JDM and Euro Spec Engines
Create new section 9.1.4.G.2 by adding the following language:"*Engines from vehicles not available in a car delivered in North America will be considered and approved on a case-by-case basis for use in ST. For an engine to be considered, a member must submit to the CRB a Vehicle Technical Specifications (VTS) sheet with all engine parameters filled out. Copies of the appropriate factory shop manual are also useful for this consideration. Any deviations from the STCS that will be required for installation (e.g., trans adapter plate, alternate intake manifold, etc) must be noted in the "Requested Non-Stock Allowances" section, otherwise they will not be allowed. Once this information is received and considered, any approved engines will be noted in a separate table within the STCS.*

Improved Touring
ITB
1. #3282 (David Russell) Include LH-Jetronic 1.0 in the notes section
Re-classify the Volvo 240 line from ITB to ITC:

~~ITB~~ ITC	Engine Type	Bore x Stroke (mm) / Displ. (cc)	Valves IN & EX (mm)	Comp. Ratio	Wheel-base (inch)	Wheel Dia. (inch)	Gear Ratios	Brakes Std. (mm)	Weight (lbs)	Notes:
Volvo 242 /244 2.0 (1975)	4 cyl SOHC	88.9 x 80.0 2127	(I) 44.0 (E) 35.0	8.7	104.0	15	3.13, 1.99, 1.36, 1.00, 0.80	(F) 262 vented Disc (R) 280 solid Disc	~~2780~~ *2570*	

~~ITB~~ *ITC*	Engine Type	Bore x Stroke (mm) / Displ. (cc)	Valves IN & EX (mm)	Comp. Ratio	Wheel-base (inch)	Wheel Dia. (inch)	Gear Ratios	Brakes Std. (mm)	Weight (lbs)	Notes:
Volvo 240 2.3 ~~*(83-95)*~~ *(83-93)*	4 cyl SOHC	96.0 x 80.0 2320	(I) 44.0 (E) 35.0	10.3	104.3	15	4.03, 2.16, 1.37, 1.00, 0.80 or 4.03, 2.16, 1.37, 1.00, 0.82	(F) 262 vented Disc (R) 280 solid Disc	~~*2780*~~ *2735*	

~~ITB~~ ITC	Engine Type	Bore x Stroke (mm) / Displ. (cc)	Valves IN & EX (mm)	Comp. Ratio	Wheel-base (inch)	Wheel Dia. (inch)	Gear Ratios	Brakes Std. (mm)	Weight (lbs)	Notes:
Volvo 242 /244 2.1 (76-82)	4 cyl SOHC	92.0 x 80.0 2127	(I) 44.0 (E) 35.0	9.3	104.0	15	3.71, 2.16, 1.37, 1.00, 0.80	(F) 262 vented Disc (R) 280 solid Disc	~~2780~~ *2570*	Bosch CIS injection or LH-Jetronic Injection

Production
None.

American Sedan
None.

Showroom Stock
None.

Spec Miata
None.

Touring
T
1. #7840 (Club Racing Board) National Class Management - Touring Consolidation for 2013
The CRB has developed a proposal for consolidation of the Touring and Showroom Stock classes for 2013. There will be 4 Touring classes, with all Showroom Stock cars located within a Touring class, based on their performance capability. A majority of the Touring rules will be retained, but, at the top of the description of each Class below, there may be a set of philosophical proposed changes. This proposal will be presented to the Board of Directors (June 2012). The CRB encourages your feedback on this framework for the proposal. Many details are still in review. If you have comments or suggestions, please send them to

the CRB via the form at http://www.crbscca.com/ or www.clubracingboard.com.

Class 1: All

Cars in class permitted the following changes:

- No Interiors
- Shocks Open; **After market Springs and sway bars assigned on a case-by-case basis**
- **Maximum 3.0** degrees of negative chamber is allowed on front and rear suspensions. Strut suspensions may de-camber wheels by the use of eccentric bushings, eccentric bolts (crash bolts) at the strut-to-spindle, and/or by use of slotted adjusters at the top of the strut mounting plate. If upper strut slotted plates are used, they shall be located on existing chassis structure, utilizing the manufacturer's original bolt holes and may not serve as reinforcement for that structure. On other forms of suspension, camber adjustment may be achieved by the use of shims and/or eccentric bushings.
- **OEM ECU only (Re-Flashing permitted)**
- Non-OEM Engine Cooler, Transmission Oil and Differential Cooler are permitted
- Parking brake assemblies may be removed
- Cars allowed to replace OEM upper and lower A-Arm bushings with polyurethane or Delrin bushings.

CLASS 1	Bore x Stroke(mm)/ Displ. (cc)	Wheelbase (mm)	Max Wheel Size (inch)	Tire Size	Gear Ratios	Final Drive	Brakes (mm)	Weight (lbs)	Notes:
Acura NSX (97-03)	93.0 x 78.0 3200	2530	16x7(F) 17x8.5(R)	215/45/16 245/40/17	3.07, 1.96, 1.43, 1.12, 0.91, 0.72	4.06	(F) 297 Disc (R) 302 Disc	3100	**Member to request re-classing car, required.**
BMW E92 M3 (08-12)	92.0 x 75.2 3999	2761	F:18x8.5 R:18x9.5	265/40	4.06, 2.37, 1.58, 1.19, 1.000, .87	3.85 or 3.15	F:360x30 R:350x24 or	3300	***StopTech Brake Kit permitted: 380x35mm 6-piston caliper Part# 83.160.6D00.XX (F) and 355x35mm 4-piston caliper Part# 83.160.0047.XX (R) Brembo Brake Kit permitted: 365x34mm (F) part # xxx 6-piston caliper and 345x28mm (R) part #xxxxxx 4-piston caliper Alcon Brake Kit permitted: 365x32mm (F) part # BKF9751ZG70L 6-piston caliper and 348x28 (R) 4-piston caliper (R) part # BKR9856B20L***
BMW M3 GTS (2010)	92.0/82.0 4361	2761	F:19x9 R:19x10	F:255/35 R:285/30	4.78, 3.06, 2.15, 1.68, 1.39, 1.20, 1.00	3.15	F:378x32 R:380x28	3400	***StopTech Brake Kit permitted: 380x35mm 6-piston caliper Part# 83.160.6D00.XX (F) and 355x35mm 4-piston caliper Part# 83.160.0047.XX (R) Brembo Brake Kit permitted: 365x34mm (F) part # xxx 6-piston caliper and 345x28mm (R) part #xxxxxx 4-piston caliper Alcon Brake Kit permitted: 365x32mm (F) part # BKF9751ZG70L 6-piston caliper and 348x28 (R) 4-piston caliper (R) part # BKR9856B20L***
Cadillac CTS-V (06-07)	101.68 x 92.0 5967	2880	18 x 9.5 (F&R)	295/35 max.	2.97, 2.07, 1.43, 1.00, 0.84, 0.56	3.73	(F) 355 Vented Dsc (R) 365 Vented Disc	3550	**~~GM Cooling Kit allowed (Engine Oil Cooler Kit PN 25534461, Trans. Cooler PN 25534462, Rear dif. cooler PN 25534463~~, Brake duct extension (through fog light) PN 25534464, Radiator kit PN 25534465, Fuel tank sender kit PN 25534466. A max of 275 tires on 9.5-inch wide wheels is allowed. This max. tire size supersedes TCS 9.1.10.D.7.b. ~~Front Spring (550lb) #25534467, Rear Spring (550lb) #25534468, Front Roll Bar (36mm) # 25534469,~~ Front Isolator #25534470, Rear Roll Bar (24mm) #25534471, Rear Isolator #25534472, F&R Links #25534473**
Chevrolet Camaro SS, 1LE (10-13)	103.3 x 92.0 6162	2853	*20x10 (F & R)*	295/35 (F & R)	3.01, 2.07, 1.43, 1.0, 0.84, 0.57	3.45	(F)355 x 32 Vented (R)365 x 28 Vented	**3600**	**1LE-SS Track Pack permitted. Tower Brace 22756880, oil-air separator 12653074, 57 mm flat plate restrictor required**
Chevrolet Camaro SS (98-02)	99.0 x 92.0 5666	2568	17 x 9 (F & R) 16x10(F) 16x11(R)	275/40/17	2.66, 1.78, 1.30, 1.00, 0.74, 0.50	3.42	(F) 300 Vented Disc (R) 302 Vented Disc	3280	35mm front sway bar & 31mm rear sway bar is permitted. Springs: (F) 550 lb/in (R) 130 lb/in

Chevrolet Corvette C-5 Incl. Fxd Cpe (98-04) Z06 (hardtop) (01-04)	99.0 x 92.0 5666	2655	18x10 (F) 18x11 (R)	315/35/18 (max) (F&R) Rear tires may protrude up to 1.0" with GM T1 Perf. Susp. pkg. Max. camber: (F) -3.5 (R) -2.5 with GM suspension pkg.	(C5): 2.66, 1.78, 1.30, 1.00, 0.74, 0.50 (Z06): 2.97, 2.07, 1.43, 1.00, 0.84, 0.56	3.42	(F) 325 Vented Disc (R) 305 Vented Disc May use two-piece steel rotors with aluminum hats up to 5% larger than 340/330; Any four piston calipers and brackets are permitted. Any brake caliper pistons are allowed; may use the Wilwood SL6R brake caliper.	3300	GM Motorsports T1 suspension pkg. (Part # 12480062) is permitted. Parts for Z06 upgrade: LS6 Engine Assy.: P/N 88894057, Engine components if using LS1 block: LS6 cylinder head: P/N 12560801, LS6 intake manifold: P/N 88890524 or 12480075, LS6 camshaft: P/N 12560950, LS6 valve springs: P/N 12565117, LS6 valve shims: P/N 12565118, Lifter valley cover: P/N 12568002, PCM: P/N 12200411, LH Exh manifold: P/N 12561255, RH Exh manifold: P/N 12561256. C-5 exhaust system may be modified to mate to Z06 exhaust manifolds. Cage attachments points may be on the frame. Floor may be modified to facilitate installation of cage mounting plates. Wrapping of tie-rod ends to shield heat is permitted. This max. tire supersedes TCS 9.1.10.D.7.b. C6 calipers permitted. Alternate wheel bearings SKF Part # BAR 5049C permitted. OEM or equivalent carbon fiber hood is allowed. ~~The stock exhaust manifolds may be replaced with any headers that connect to the catalytic converters or to the converter replacement pipes allowed in 9.1.10.D.1.h without other modification to the exhaust system. The header may replace the catalytic converter replacement pipes.~~ Entire parking brake assembly (including interior lever) may be removed. The A.I.R air pump system may be removed. **Flat plate restrictor XXXmm**
Chevrolet Corvette C6 Coupe (05-10) / Grand Sport (*10-12*)	101.68 x 92.0 5967 (LS2) 103.26 x 92.0 6162 (LS3)	2685	18 x 10 (F) 19 x 11 (R) or 18 x 11 (F) 19 x 13 (R)	315/35 max. (F&R) or 315/35 max (F) 345/35 max (R) Rear tires may protrude up to 1.0" with GM T1 Performance Suspension package. Max. camber: (F) -3.5 (R) -2.5 with GM T1 Performance Suspension package.	2.66, 1.78, 1.30, 1.00, 0.74, 0.50, or 2.97, 2.07, 1.43, 1.00, 0.71, 0.57	3.42	(F) 325 / 340 Vented Disc (R) 305 / 330 Vented Disc or (F) 355 x 32 Vented Disc (R) 340 x 26 Vented Disc or May use 2-pc steel rotors with alum. hats up to 5% larger than Z51 rotor. ---------- -- LS2 may use Grand Sport brake package. Any brake caliper pistons allowed. May use any four piston brake caliper and brackets with a 50 pound weight increase. Z06 brake calipers allowed.	LS2: *3180* LS3: **3400** Add 50 lbs. for larger wheels and/or tires	C6 T1 Suspension kit and Z51 option allowed. Floor may be modified to facilitate installation of cage mounting plates. The max. tire sizes supersede TCS 9.1.10.D.7.b. Removable roof panel shall be installed. The following parts are allowed: GM oil pan #12630477; GM radiator baffle # 25953429 (LS3 only); fan shroud, Phoenix part # 1005422; Canton Accusump part # CA24006 or # CA24024, along with Electric solenoid W/ epc # CA24273, Accusump Check Valve # CA2428, and Wheel to Wheel Adapter block # 0760-50001, and related hoses and mounting brackets; 180 degree thermostat Hypertech # 1015; Lingenfelter Performance Engineering #L310055204 thermostat (LS2 only); HD oil pressure shim Phoenix part # 1005421. Wrapping of tie-rod ends to shield heat is permitted. Trimming of the lower edge of the center of the air dam is allowed up to a depth of 3.9 cm. ARE dry sump system part #3021 S permitted; the following parts are included: mount w/tensioner and spacer #3020YM, serpentine belt #4032S, pulley #4SERP, oil tank #7030, tank bracket #7000, breather catch can # 7100, filter adapter #4010, damper assembly #8005. Aviaid Dry Sump System part number 008-10001 is permitted; the following parts are included: 3-stage pump 13111-1182, mounting hardware 40082 and 40018-83-1, HTD pump pulley 11649, HTD belt 46476, ATI damper assembly 917289, pan assembly 152-52504-10001, and tank assembly 110-50020-10001. The oil tank for either system shall be installed in the current battery location and the battery must be relocated to the same location as the 08 Corvette Z06; GM battery mounting bracket and hardware must be used. Alternate wheel bearings SKF Part # BAR 5049C permitted. Entire parking brake assembly (including interior lever) may be removed. **LS2: XXmm flat plate restrictor is required LS3: XXmm flat plate restrictor is required**

Chevrolet Corvette Z06 (2006-2012)	*103.26 x 92.0 6162*	*2685*	*18 x 10 (F) 19 x 11 (R) or 18 x 11 (F) 19 x 13 (R)*	*315/35 max. (F&R) or 315/35 max (F) 345/35 max (R) Rear tires may protrude up to 1.0" with GM T1 Performance Suspension package. Max. camber: (F) -3.5 (R) -2.5 with GM T1 Performance Suspension package.*	*2.66, 1.78, 1.30, 1.00, 0.74, 0.50 or 2.97, 2.07, 1.43,.1.00, 0.71, 0.57*	*3.42*	*(F) 325 / 340 Vented Disc (R) 305 / 330 Vented Disc or (F) 355 x 32 Vented Disc (R) 340 x 26 Vented Disc or May use 2-pc steel rotors with alum. hats up to 5% larger than Z51 rotor. ---------- -. Any brake caliper pistons allowed. May use any four piston brake caliper and brackets with a 50 pound weight increase. Z06 brake calipers allowed.*	*3400*	*C6 T1 Suspension kit and Z51 option allowed. Floor may be modified to facilitate installation of cage mounting plates. The max. tire sizes supersede TCS 9.1.10.D.7.b. Removable roof panel shall be installed. The following parts are allowed: GM oil pan #12630477; GM radiator baffle # 25953429); fan shroud, Phoenix part # 1005422; Canton Accusump part # CA24006 or # CA24024, along with Electric solenoid W/ epc # CA24273, Accusump Check Valve # CA2428, and Wheel to Wheel Adapter block # 0760-50001, and related hoses and mounting brackets; 180 degree thermostat Hypertech # 1015; HD oil pressure shim Phoenix part # 1005421. Wrapping of tie-rod ends to shield heat is permitted. Trimming of the lower edge of the center of the air dam is allowed up to a depth of 3.9 cm. ARE dry sump system part #3021 S permitted; the following parts are included: mount w/tensioner and spacer #3020YM, serpentine belt #4032S, pulley #4SERP, oil tank #7030, tank bracket #7000, breather catch can # 7100, filter adapter #4010, damper assembly #8005. Aviaid Dry Sump System part number 008-10001 is permitted; the following parts are included: 3-stage pump 13111-1182, mounting hardware 40082 and 40018-83-1, HTD pump pulley 11649, HTD belt 46476, ATI damper assembly 917289, pan assembly 152-52504-10001, and tank assembly 110-50020-10001. The oil tank for either system shall be installed in the current battery location and the battery must be relocated to the same location as the 08 Corvette Z06; GM battery mounting bracket and hardware must be used. Alternate wheel bearings SKF Part # BAR 5049C permitted. Entire parking brake assembly (including interior lever) may be removed.* **LS2: XXmm flat plate restrictor is required LS3: XXmm flat plate restrictor is required**
Dodge Viper RT-10/ RT-10 ACR & GT-S / GT-S ACR (96-02)	101.6 x 98.5 7990	2444	18x10 (F) 18x13 (R)	(F) 275/40 (F) 315/35 (max) (R) 335/35	2.66, 1.78, 1.30, 1.00, 0.74, 0.50	3.07	(F&R) 330 Disc	**3600**	Differential Cooler Kit (Part # P5007010), Alternate Oil Pan (Part # P5007009), Throttle restrictor between each throttle body and plenum is mandatory: 0.060" flat steel plate with **one XXmm hole**. This max. tire supersedes TCS 9.1.10.D.7.b. Alternate radiator Parts Rack part #RDR1 or Roe Racing #SKU102-205 allowed. May update to 03-06 Viper brakes. ~~Entire parking brake assembly (including interior lever) may be removed.~~
Dodge Viper SRT-10 Incl. Coupe (03-06)	102.4 x 100.6 8300	2510.2	18x10 (F) 19x13 (R)	(F) 275/35 (F) 315/35 (max) (R) 345/30 Maximum camber: (F) -3.0 w/ Dodge Motorsports T1 suspension package	2.66, 1.78, 1.30, 1.00, 0.74, 0.50	3.07	(F&R) 355 Disc	**3600**	Detachable Autoform hardtop shall be installed on convertible model (latches shall be replaced with positive fasteners), convertible top shall be removed. Throttle restrictor between each throttle body and plenum is mandatory: .060" flat steel plate with one **XXmm hole.** A .250" thick (max) steel or aluminum spacer is permitted between the throttle body and the restrictor to provide clearance for the throttle butterfly. This spacer shall replicate the dimensions of the stock throttle body flange (i.e. throttle bore, bolt pattern, idle-air bypass port dimensions, etc.) Throttle body spacer bore(s) shall be no larger than the stock throttle body bore diameter at the gasket surface, and shall not be radiused in any way. Throttle restrictor may include idle air control and/or PCV orifice. The following parts are allowed: Dodge differential and trans. coolers, part # 4510173, Ron Davis radiator # 18VP03, Mopar performance fan delete kit #P5153260, Phoenix SRT10 electric fan kit #PPI123321, Mopar swing oil pickup kit # 4510174, Trans. mount # P4510179, Dodge Motorsports T1 suspension kit part # P5153251.This max. tire supersedes TCS 9.1.10.D.7.b. Rear parking brake calipers may be removed. Hypercoil springs #188A0750 (F) and 188A0800 (R) are allowed. B&M Shifter (PN45055) is permitted. Oil pan part #5037735AC, oil pick up part #5038022AB, oil pick up tube part #5037312AE are allowed. ~~Entire parking brake assembly (including interior lever) may be removed.~~

Ferrari 360 Modena & Challenge (00-02)	85.0 x 79.0 3586	2600	18 Alum	(F) 235/45 (R) 315/30 (max)	3.29, 2.16, 1.61, 1.27, 1.03, 0.95	4.44	(stock) (F&R) 330 Vented Disc (Challenge) (F) 355 x 32 Vented Disc (R) 330 x 18 Vented Disc	**2875**	**Member to request re-classing car, required.**
Ford Mustang Boss 302 (2012);	92.220 x 92.7 4957	2720	18 X 11 (F) 18 x 11 (R)	315/35 (F) 315/35 (R)	3.66, 2.43, 1.69, 1.32, 1.00, 0.65	3.73	(F) 355 x 32.1 Vented (R) 300 x 19.2 Vented	3500	**Flat plate restrictor XXXmm**
Ford Mustang GT 5.0L (10-12)	(92.220) x (92.7) / (4957)	107.1	18 x 10 (F) 18 x 10 (R)	295/35 max	3.66, 2.43, 1.69, 1.32, 1.00, .65	3.31	(F) (355) x (32.1) Vented (R) (300) x (19.2) Vented	*3500 ~~with alt. driveshaft: 3700 (see notes)~~*	The following parts are allowed: GT/CS Front Fascia #BR3Z-17626-AA, GT/CS Rear Fascia #AR3Z-17F828-AA, Ford Accessories Spoiler #AR3Z-6344210-CA, 14" Brembo Brake Kit #M-2300-S, Rear Axle Cover #M-4033-K, Spring Kit #M-5300-A (M-5310-A front, M-5560-A rear), Strut Tower Brace #M-20201-S197, Swaybar Kit #M-5490-A, Jounce Bumper Kit # M-5570-A, Panhard Bar #M-4264-A, Rear Lower Control Arms #M-5649-R1, Rear Upper Shock Mount #M-18197-A. ~~57mm flat plate restrictor required.~~ *Ford Racing oil pan #M-6675-M50BR permitted. Driveshaft from The Driveshaft Shop part number FDSH22-A-CV1 is allowed.*
Lotus Sport Exige Cup 255 (2007)	82.0 x 85.0 1796	2300	16 x 7 (F) 17 x 8 (R)	195/50 (F) 225/45 (R)	3.12, 2.05, 1.48, 1.17, 0.92, 0.82		(F) 308 Vented Disc (R) 288 Vented Disc	2090	**Member to request re-classing car, required.**
Maserati Coupe GT Cambiocorsa (2004)	92.0 x 79.3 4244	2660	18 x 8 (F) 18x9.5 (R)	235/40 (F) 265/35 (R)	3.29, 2.16, 1.61, 1.27, 1.03, 0.85	3.73	(F) 333 Vented Disc (R) 310 Vented Disc	Coupe: 3825 Cambiocorsa: 3900	**Member to request re-classing car, required.**
Mitsubishi Lancer Evo 8/9 / RS / GSR / MR (03-06)	85.0 x 88.0 1997	2624	17 x 9 (F&R)	235/45 (F&R) or 275/45 (F&R)	2.93, 1.95, 1.41, 1.03, 0.72 or 2.91, 1.94, 1.43, 1.10, 0.87, 0.69	4.53	(F) 276 / 320 Vented Disc (R) 284 / 300 Vented Disc	**3500**	Permacool trans. oil cooler #1006 or Setrab #SET616 and Mocal pump # MOC-17522HT, AMS front and rear springs #AMS-SCCA01 allowed or AMS front and rear spring kit #AMS-SCCA02 including Genesis Technologies 2" spacer allowed. ~~**41mm Turbo Inlet Restrictor required.**~~ Koyo Radiator #KOY-R2676 allowed. Alternate AMS front sway bar permitted #AMS-SCCA-SBF02, alternate rear sway bar permitted #AMS-SCCA-SBR02. **Turbo Inlet restrictor XXXmm**
Mitsubishi Lancer Evo X / GSR / MR (08-11)	86.0 x 86.0 1998	2650	18x9 (F&R)	245/40 (F&R) or 275/45 (F&R) MAX	2.857, 1.950, 1.444, 1.096, .761 or 3.655, 2.368, 1.754, 1.322, 1.008, .775,	4.687 or 4.062	(F) 350 Vented Disc (R) 330 Vented Disc	*3599 with/or/ without* paddle shifter	Setrab #SET616 and Mocal pump # MOC-17522HT, AMS front and rear springs SCCA01-EVO X – AMS. 2" Genesis Technologies spacers allowed. ~~*42 mm Turbo inlet restrictor required.*~~ Alternate AMS front sway bar permitted #SCCA-SBF02 EVO X, alternate rear sway bar permitted #SCCA-SBR02 EVO X. **Turbo Inlet restrictor XXXmm**
Nissan 370Z (09-11) / 370Z NISMO Edition (09-11)	95.5 x 86.0 3696	2550	19 x 9 (F) 19 x 10 (R)	275/30 (F) 275/35 (R)	3.79, 2.32, 1.62, 1.27, 1.00, .79	3.69	(F)320 x 28 Vented (R)320 x 16 Vented	*3200*	5300S-SS370 T-2 spring kit allowed; 54600-SS370 T-2 front and rear sway bar kit allowed. Sports Package is allowed. (2) 40mm flat plate restrictors required. **Members allowed to request additional NISMO parts: i.e.: cold air boxes, etc for approval**
Pontiac GTO (04-06)	99.0 x 92.0 5665 101.68 x 92.0 5967	2788.9	17 x 9.5 (F&R)	245/45 or 275/35 (max) (F&R)	2.97, 2.07, 1.43, 1.00, 0.84, 0.57	3.46	(F) 296/320 Vented Disc (R) 286 Vented Disc	5665cc @ 3580 5967cc @ 3680	**Member to request re-classing car, required.**
Porsche 911/ 997 GT3 (03-05)	100.1 x 76.5 3600	2355	18 x 8.5 (F) 18 x 11 (R)	235/40 (F) 295/30 (R)	3.82, 2.15, 1.56, 1.21, 1.00, 0.85	3.44	(F) 350 Vented Disc (R) 330 Vented Disc	**3400**	H&R Springs (F) HRF 200-60-100, (R) HRF 140-70, tender springs 60-60-25, and spring holders ZT-1-X002A01 allowed. **XXmm flat plate restrictor is required**
Porsche 911 / 996 (98-05)	96.0 x 78.0 3400 100.1 x 76.5 3600	2454	18 x 8.5 (F) 18 x 11 (R)	245 (F), 295 (Max) (R)	3.82, 2.20, 1.52, 1.22, 1.02, 0.84	3.44	(F) 318 Disc (R) 299 Disc	*3200*	Engine & transmission coolers are free. Ducting for coolers is free, provided it doesn't change size and/or shape of factory body panels. Spring rates are free. Sway bar size & configuration is free. Ducting of air to rotors is allowed. Removal of rotor dust shields is allowed. Seats, steering wheel & shift knobs may be replaced. Spoilers & bumper/airdams are free provided they do not exceed the max. body width by any amount and/or the max. body length by more than 1". Rear wings may be no higher, relative to the roofline, than a factory, non-extended, 3.8 RSR wing. Camber adjustment slots may be elongated. Porsche Motorsport rear control arms allowed.

Porsche 911 Carrera S (05-07)	99.0 x 82.8 3824	2350	(F) 19 x 8 (R) 19 x 11	(F) 235/35 (R) 295/30	3.91, 2.32, 1.61, 1.28, 1.08, .88	3.56	(F) 331 Vented Disc (R) 331 Vented Disc	**3200**	**Member to request re-classing car, required.**
Saleen Parnelli Jones Mustang (2007)	90.2 x 90.0 4601	2720	18 x 9.5	275/40	3.38, 2.00, 1.32, 1.00, 0.68	3.73	(F) 355 Vented Disc (R) 300 Vented Disc	3460	**Member to request re-classing car, required.**
Steeda Q335 Mustang (2007)	90.2 x 96.5 4931	2720	19 x 9 (F) 19 x 10 (R)	285/35	3.38, 2.00, 1.32, 1.00, 0.68	3.73	(F) 355 Vented Disc (R) 300 Vented Disc	3460	
Subaru Impreza WRX STi (03-07)	99.5 x 79.0 2457	2540	17 x 9	275/40	3.64, 2.38, 1.76, 1.35, 0.97, 0.76	3.9	(F) 323 Vented Disc (R) 313 Vented Disc	**3400**	The following parts are allowed: Fluidyne oil cooler # DB30120-10, trans. cooler # DB30115-8, diff. cooler # DB30115-8, cooler pump # WEL-K9200A, Mocal oil cooler #825a105, trans cooler # oc1197-6, Phoenix Performance brake duct kit # IPBK01. ~~**41mm Turbo Inlet Restrictor required.**~~ AMS front and rear springs #AMS-SCCA-STiST1 allowed. Front Sway bar Whiteline PN #BSF36XXZ and Rear Sway bar Whiteline PN #BSF37XZ allowed. Racecomp Brake duct kit part #RCE-CFKBK is allowed. Baldwin Motors spring package part BMI-T2SP1, permitted (includes: Front Hypercoil springs 2.25" ID / 7"x600 psi & helper springs, Rear Hypercoil springs 2.50" ID / 8"x550 psi & helper springs, Racecomp Engineering rear top perch adaptors, Racecomp Engineering modified rear top hats). **Members allowed to request cold air boxes, for approval (include part numbers and pictures) Turbo Inlet restrictor XXXmm**
Subaru Impreza WRX STi (08-11)	99.6 x 79.0 2457	2624	17 x 9	235/45	3.64, 2.24, 1.52, 1.14, 0.97, 0.76	3.90 Front 3.55 Rear	(F)326 Vented (R)316 Vented	**3400**	~~**41mm Turbo Inlet Restrictor required.**~~ Phoenix Performance 400 psi front springs, 500 psi rear springs, 25mm front sway bar, 22mm rear sway bar permitted. **Members allowed to request cold air boxes, for approval (include part numbers and pictures) Turbo Inlet restrictor XXXmm**

Class 2:

All Cars in class permitted the following changes:

- No Interiors
- Shocks Open **After market Springs and sway bars assigned on a case-by-case basis**
- **Maximum 3.0** degrees of negative chamber is allowed on front and rear suspensions. Strut suspensions may de-camber wheels by the use of eccentric bushings, eccentric bolts (crash bolts) at the strut-to-spindle, and/or by use of slotted adjusters at the top of the strut mounting plate. If upper strut slotted plates are used, they shall be located on existing chassis structure, utilizing the manufacturer's original bolt holes and may not serve as reinforcement for that structure. On other forms of suspension, camber adjustment may be achieved by the use of shims and/or eccentric bushings.
- **OEM ECU only (Re-Flashing permitted)**
- Sway bars not specified, may be requested
- 9" wheel unless specified on spec line.
- Cars over 3500 lbs. permitted to run up to a 275 sized tire

Class 2	Bore x Stroke(mm)/ Displ. (cc)	Wheelbase (mm)	Max Wheel Size (inch)	Tire Size	Gear Ratios	Final Drive	Brakes (mm)	Weight (lbs)	Notes:
Acura TL Type S (07-08)	89.0 x 93.0 3471	2740	17 x 8 **or 9**	235/45	3.93, 2.48, 1.70, 1.25, 0.98, 0.77	3.29	(F) 310 Vented Disc (R) 282 Solid Disc	3660	H&R front springs (1027 lb/in) #180-60-180, rear springs (1827 lb/in) #120-60-320, and 24 mm rear sway bar Progressive Technology #62.0110 allowed.

Acura TL SH-AWD (2011-13)	90.065 x 96.1 3664	2776	19 X 9 (F) 19 x 9 (R)	275/40 (F) 275/40 (R)	3.63, 2.12, 1.53, 1.13, 0.85, 0.69	3.84	(F) 320 x 28 Vented (R) 334 x 11 Solid	3200	1000 lb/in springs permitted (F&R), part numbers H&R R25081000 or RF200180 or Eibach 0800.225.1000. 24mm rear anti-sway bar permitted, part number Progress 62.0111. The glass sunroof must be replaced with a metal panel; the panel must be the same thickness as the roof material; the panel must retain the shape of the glass sunroof and must be painted in body color.
Audi S4 (2004)	84.58 x 92.71 4162	2649	18 x 8 **or 9** (F&R)	235/40 (F&R)	3.67, 2.05, 1.46, 1.33, 0.92, 0.78	3.89	(F) 340 Vented Disc (R) 300 Vented Disc	3920	**Member to request re-classing car, required.**
Audi S4 (10-11)	84.5 x 89.0 2995	2809	18 X 9 (F&R)	275/35 (F&R)	3.67, 2.16, 1.52, 1.13, 0.92, 0.78	3.88	(F) 320 Vented (R) 286 Vented	3430	~~**40mm flat plate restrictor required. S tronic transmission permitted at 3480 lbs., Ratios: 3.692, 2.238, 1.559, 1/175, 0.915, 0.745, 0.617**~~ **Member to request re-classing car, required.**
Audi TTS Coupe (10-11)	82.5 x 92.8 1984	2468	18 X 9 (F&R)	275/35 (F&R)	2.92, 1.96, 1.40, 1.03, 1.08, 0.87	4.77 (1-4) 3.44 (5-6)	(F) 340 Vented (R) 310 Vented	3150	~~**38mm turbo inlet restrictor required.**~~ **Member to request re-classing car, required.**
BMW M Coupe (2002)	87.0 x 91.0 3246	2459	18 x 9.0(F) 18 x 10 (R)	225/45 (F) 245/40 (R)	4.21, 2.49, 1.66, 1.24, 1.00	3.15		3350	~~**Euro Header part #11 62 7 833 500 and 62 7 833 501 allowed.**~~ **Member to request re-classing car, required.**
BMW M3 (01-06)	87.0 x 91.0 3246	2731	18 x 9 (F) 18 x 9 (R)	275/35 (F & R)	4.23, 2.53, 1.67, 1.23, 1.00, 0.83	3.62	(F) 325 x 28 Vented Disc (R) 328 x 20 Vented Disc	3500	Factory paddle shifter is permitted. Fluidyne oil cooler # DB30816-STD allowed. Turner Motorsports Suspension package #TMST2M3 allowed. This consists of front springs TMS600-10-250, rear springs TMS650-8-250, front sway bar #TMSF23.235, rear sway bar #TMSR23.327. Turner brake duct kit #TMSBRAKE46 allowed. This max tire size supersedes TCS tire rule section 9.1.10.D.7.b. Euro Header part #11 62 7 833 500 and 62 7 833 501 allowed. **Flat plate restrictor XXXmm**
BMW 135i (08-09)	84.0 x 89.6 2679	2761	(F) 18 x 8 **or 9** (R) 18 x 9	(F) 225/40 (R) 255/35	4.00, 2.40, 1.58, 1.19, 1.00, 0.87	3.08	(F) 348 Vented Disc (R) 336 Vented Disc	3680	ZSP suspension package allowed. Sport seat package allowed. ~~(2) 29.5mm Turbo Inlet Restrictor required.~~ **Turbo Inlet Restrictor XXXmm**
BMW 330i/Ci (01-03)	84.0 x 89.6 2979	2726	17 x 9 (F&R)	Any DOT tire fitting stock body w/o modifications	4.21, 2.45, 1.66, 1.24, 1.00	2.93	(F) 325 x 28 Vented Disc (R) 325 x 20 Vented Disc	3335	~~**Racing Dynamics sway bar set (24mm & 21mm bars (one each)) is permitted. 350 lb. front springs w/ threaded collars and 400 lb. rear springs w/ adjusters are permitted.**~~ **Member to request re-classing car, required.**
BMW 330i Sedan (2006)	85.1 x 87.9 2996	2761	17 x 8 **or 9** (F&R)	225/45 (F&R)	4.35, 2.50, 1.67, 1.23, 1.00, 0.85	3.15	(F) 330 Vented Disc (R) 335 Vented Disc	3335	**Member to request re-classing car, required.**
BMW 335CI (2007)	84.0 x 89.6 2679	2761	(F) 18 x 8 **or 9** (R) 18 x 9	(F) 225/40 (R) 255/35	4.00, 2.40, 1.58, 1.19, 1.00, 0.87	3.08	(F) 348 Vented Disc (R) 336 Vented Disc	3680	**Member to request re-classing car, required.**
BMW Z4 3.0L (03-04)	84.1 x 89.7 2986	2494	17 x 8 **or 9** (F&R)	225/45	4.35, 2.50, 1.66, 1.24, 1.00, 0.85	3.07	(F) 300 Vented Disc (R) 294 Vented Disc	3120	Detachable hardtop shall be installed (latches shall be replaced with positive fasteners), convertible top shall be removed.
BMW Z4 M Coupe (2007)	87.0 x 91.0 3246	2497	(F) 18 x 8 **or 9** (R) 18 x 9 or (F) 18 x 9 (R) 18 x 9 at additional 25 lbs.	(F) 225/45 (R) 255/40	4.35, 2.50, 1.67, 1.23, 1.00, 0.85	3.62	(F) 345 Vented Disc (R) 328 Vented Disc	*3375*	Euro manifold part #11 62 7 833 500 and 62 7 833 501 allowed. Turner springs permitted: front TMS600-10-250, rear TMS650-8-250; Ground control # MZ4Swaybar set *permitted with 100 lbs penalty*. **Flat plate restrictor XXXmm**

BMW Z4 3.0si Coupe (07-08)	85.1 x 87.9 2996	2495	18 x **8 or 9**(F&R)	225/45	4.35, 2.50, 1.66, 1.23, 1.00, 0.85	roadster: 3.23 coupe: 3.46.	(F) 325 x 12.8 Vented Disc (R) 294 x 11.6 Solid Disc	**3200 or lighter**	*May use H&R springs: front RF160090, rear RF160100; rear spring height adjusters: Turner #HR92-K-X-011A01; H&R sway bar kits: front 70276 27mm, rear 71276 21mm, at 3500 lbs.*
Buick Regal (2011)	86.0 x 86.0 1998	2631	18 x 8 **or 9** (F) 18 x 8 **or 9** (R)	**255/45 (F) Max 255/45 (R) Max**	3.38, 1.76, 1.18, 0.89, 0.70	4.05	(F) 315 Vented Disc (R) 292 Solid Disc	**2950**	~~**36mm Turbo Inlet Restrictor required.**~~ Front springs part # CCS635, rear springs # CCS639, front control arms # CCS636 and CCS637 permitted. **Turbo Inlet Restrictor XXXmm**
Chevrolet Camaro SS & Z-28 (98-02)	99.0 x 92.0 5666	2568	17x9 (F&R)	275/40	2.66, 1.78, 1.30, 1.00, 0.74, 0.50	3.42	(F)300 Vented (R)302 Vented	*3400*	Power steering cooler (option code V12) is permitted. Front spring rate shall be 280-320 lbs. per inch and the minimum free length is 13 3/4 inches. Severn Canton accusump part # CA24024 or CA24006, along with Electric solenoid W/ epc # CA24273, Accusump Check Valve #CA2428, and Wheel to Wheel Adapter block # 0760-50001, and related hoses and mounting brackets are permitted. GM oil and diff coolers #12480080 allowed. Ron Davis Radiator 11-16CA0002 allowed. Z28 can use original hood. Strano Performance Camaro Track Package (Part #SP- 141, Spring Set (550# Front/150# Rear); Part #SP-8316. Front Sway Bar (1-3/8" or 35mm); Part #SP-8327, Rear Sway Bar (7/8" or 22mm); Part #UMI-2006, Strut Tower brace, 2 pt, 1.25" OD) permitted.
Chevrolet Cobalt (05-07)	*86.0 x 86.1 1998*	*2629*	*18 X 9.5 (F&R)*	*255/50*	*3.38, 1.76, 1.18, 0.89, 0.71*	*4.05*	*(F) 296 Vented Disc (R) 270 Solid Disc*	*2850*	*The following GM parts are allowed: front springs part # CCS635, rear springs # CCS639, front control arms # CCS636 and CCS637, shrouding kit # CCS644. Griffin radiator # 9D-18194-01 allowed. Stage Two Supercharger kit, part #17803229 (includes Belt -#12597993 and Injector kit -#12597995) permitted. Optional rear sway bar max 42 mm (body and suspension mounting same as OEM). AEM cold-air intake (part# 21-532C) is permitted. Maximum spring rate 500 lbs/in (F), 700 lbs/in (R). Allow: Smaller Supercharger pulley: size (member input requested)*
Chevrolet Cobalt SS (08-*10*)	85.3 x 86.1 1998	2631	*18 x 9.5*	*255/50*	3.38, 1.76, 1.18, 0.89, 0.70	4.05	(F) 315 Vented Disc (R) 292 Solid Disc	*2900*	*Rear sway bar max 42 mm (body and suspension mounting same as OEM), add AEM cold-air intake (part #21-682C), GM Part #55206797 sensor allowed, ~~max spring rate 500# (F) 700# (R)~~, Front control arms # CCS636 and CCS637.* **Any spring up to a maximum spring rate of 800 pounds may be used Turbo Inlet Restrictor XXXmm**
Chevrolet HHR SS (08-09)	85.3 x 86.1 1998	2631	*18 x 9*	**255/45 MAX**	3.38, 1.76, 1.18, 0.89, 0.70	4.05	(F) 315 Vented Disc (R) 270 Solid Disc	3150	~~**38mm Turbo Inlet restrictor required. Front springs part # CCS635, rear springs # CCS639, front control arms # CCS636 and CCS637.**~~ **Member to request re-classing car, required.**
Dodge SRT-4 (03-05)	88.0 x 101.1 2458	2667	*17 x 8.5 (F&R)*	*205/50 or* **255/50 Max**	3.47, 2.05, 1.37, 0.97, 0.76	3.53	(F) 280 Vented Disc (R) 220 Solid Disc	**2900**	C & R Heavy Duty Radiator a/ Spal fan, part # 4051110300-DP allowed. ~~**38mm turbo inlet restrictor required.**~~ **Any spring up to a maximum spring rate of 800 pounds may be used Turbo Inlet Restrictor XXXmm**

Ford Mustang Coupe GT & Shelby GT 4.6L (05-10)	90.2 x 90.0 4601	2720	*18 x 9.5 (F&R)*	*255/40 (F&R) or 255/45 (F) 285/40 (R)*	3.38, 2.00, 1.32, 1.00, 0.675	3.55 or 3.73	(F) 316 / 355 Vented Disc (R) 300 Vented Disc	*3400*	The following parts are allowed: Strut tower brace part #M20201-S197, Radiator #M-8005-S197, Ford Spring kit M-5300-K, sway bars M-5490-A, damper kit M-18000-A.
Ford Mustang Coupe GT & Shelby GT 5.0L (05-10)	(92.220) x (92.7) / (4957)	2720	*18 x 10 (F&R)*	*255/40 (F&R) or 255/45 (F) 285/40 (R)*	3.38, 2.00, 1.32, 1.00, 0.675	3.55 or 3.73	(F) 316 / 355 Vented Disc (R) 300 Vented Disc	**3600**	The following parts are allowed: Strut tower brace part #M20201-S197, Radiator #M-8005-S197, Ford Spring kit M-5300-K, sway bars M-5490-A, damper kit M-18000-A. 2005-2010 Mustang GT 4.6L may be converted to 2011-2012 5.0 liter specifications; if done, all drivetrain components must updated to the later model; VIN number will be disregarded for this conversion.
Ford Mustang Cobra (99-02)	90.2 x 90.0 4601	2573	*17 x 9 (F&R)*	*245/45 or 255/45*	3.37, 1.99, 1.33, 1.00, 0.67	3.27	(F) 330 x 28 Vented Disc (R) 295 x 18 Vented Disc	**3680**	~~**Service port mounted aftermarket PROM is permitted. 17 x 9 wheels and 255/45 tires are from 1995 Cobra R.**~~ **Member to request re-classing car, required.**
Ford Mustang Mach I (03-04)	90.2 x 90.0 4601	2572	*17 x 9 (F&R)*	*245/45 or 255/45*	3.38, 2.00, 1.32, 1.0, 0.62	3.55		**3230**	~~**Sean Hyland Motorsports Brake Duct Kit Part # SHMVDK-TF approved. Bulitt Springs allowed, part # 1R3Z-5310-CA (F) 1R3Z-5560-AA (R). The following parts are allowed: Steeda springs (F) 223-121-1000, (R) 223-SAM350RSR, rear sway bar 006-470, front sway bar bushings 122-4-5135-G, strut brace 555-5714, clutch cable 555-7041 and 555-7025, Cobra R brakes are permitted with an additional 25 lbs added.**~~ **Member to request re-classing car, required.**
Ford Mustang V6 (11-12)	(95.490) x (86.70) / 226 CID	107.1	18 x 8 **or 9** (F) 18 x8 **or 9** (R)	**275(max) (F&R)**	4.24, 2.54, 1.67, 1.24, 1.00, .70	3.31	(F) (316) x (30.0) Vented (R) (300) x (19.2) Vented	*3500* ~~*with alt. driveshaft: 3525 (see notes)*~~	The following parts are allowed: Ford Accessories Spoiler #AR3Z-6344210-CA Rear Axle Cover #M-4033-K, Spring Kit #M-5300, Strut Tower Brace #M-20201-S197, Swaybar Kit #M-5490, Jounce Bumper Kit # M-5570-A, Panhard Bar #M-4264-A, Rear Lower Control Arms #M-5649-R1, Rear Upper Shock Mount #M-18197-A. Car must meet V-8 T2 specification; in Notes: Disregard the engine content portion of VIN. *14" Brembo Brake Kit #M-2300-S permitted. Driveshaft from The Driveshaft Shop part number FDSH18-A is allowed.*
Honda S2000 (all) (00-09)	87.0 x 90.7 2157	2400	18 x 9 (F/R)	275/50	3.13, 2.05, 1.48, 1.16, 0.97, 0.81 or 3.13, 2.05, 1.48, 1.16, 0.94, 0.76	4.1	(F) 300 Disc (R) 282 Disc	*2700*	Detachable hardtop shall be installed (latches shall be replaced with positive fasteners), convertible top shall be removed. Factory bolt-in roll bar may be removed to facilitate the installation of the req'd roll cage. Passenger seat belt assembly may be removed in conjunction with factory bolt-in roll bar. Comptech differential housing part #550-040 allowed. Springs and sway bars from 2008 S2000 CR allowed. This max tire size supersedes TCS tire rule section 9.1.10.D.7.b. Updating and backdating of flywheel is not permitted. CR front fascia, rear deck lid, and wing are permitted. TBH cold-air intake (Part # CT Engineering 320-036). Maximum spring rate 600 lbs/in.

Hyundai Genesis Coupe (2010-)	86.0 x 86.0 1998	2819.4	19 x 8 **or 9** (F) 19 x 8.5 **or 9** (R)	**255/50 (F) Max 255/40 (R) Max**	4.229, 2.467, 1.671, 1.233, 1.000, 0.794	3.909	340.4 (F) 330.2 (R)	3200	~~**35mm Turbo Inlet Restrictor required; Track Pack allowed**~~ **Member to request re-classing car, required.**
Infiniti G35 Coupe (03-06)	95.5 x 81.4 3498	2850	19 x 9 (F) 19 x 10 (R)	225/40 (F) 245/40 (R) 285/30 (max) (F&R)	3.79, 2.32, 1.62, 1.27, 1.00, 0.79	3.54	(F) 324 Vented Disc (R) 322 Solid Disc	3268	~~**The following are allowed: Nissan oil cooler kit #21300-RSZ33, Nissan power steering cooler kit #49790-RSZ30-US, Rear diff cover Nismo part #99996-35TDK, Nissan Mtspts. Brake duct kit # 99996-Z3344, Nissan heavy duty spring kit part #99996-65Z3OUS, Nismo sway bar kit #99996-RSZ3OUS. This max. tire size supersedes TGS 9.1.10.D.7.b. Modifications to the stock fender liner is not permitted. Track option aero package permitted.**~~ **Member to request re-classing car, required.**
Lotus Club Racer (2008)	82.0 x 85.0 1796	2301	16x6.5 (F) 17x7.5 (R)	195/50 (F) 225/45 (R)	3.12, 2.05, 1.48, 1.17, 0.96, 0.82	4.53	(F) 308 Vented Disc (R) 288 Vented Disc	2190	~~**An SCCA approved welded steel cage that is bolted to the chassis/frame is allowed. The floor may be modified to facilitate the rollcage mounting points. The stock extruded aluminum chassis satisfies the requirement for forward anti-intrusion braces. The factory roll hoop shall be replaced with a single continuous hoop. Sway bar #A120L0020F, spring front #A120C0019H, spring rear #A120D0047H allowed. Lotus Elise oil accumulator system part # ALS3E0022J (accusump part #24026 and electric valve part #24270) is allowed. Lotus Track use chassis brace kit #lotac05377 allowed. Moroso Oil Pan part # 20970 is allowed. G-PAN Baffled Oil Pan is allowed. Rear cage braces may pass through rear window. Front spring, Eibach part # 600.225.0475 and rear spring, Eibach part # 800.225.0650 allowed.**~~ **Member to request re-classing car, required.**
Lotus Exige S / S220 / S240 / Elise SC (07-10)	82.0 x 85.0 / 1796	2301	16x6.5 (F) 17x7.5 (R)	195/50 (F) 225/45 (R)	3.17, 2.05, 1.48, 1.17, 0.92, 0.81	4.53	(F) 288 Vented Disc (R) 288 Vented Disc (F) 308 Vented Disc (R) 288 Vented Disc	2190 S240: 2400	An SCCA approved welded steel cage that is bolted to the chassis/frame is allowed. The floor may be modified to facilitate the rollcage mounting points. The stock extruded aluminum chassis satisfies the requirement for forward anti-intrusion braces. The factory roll hoop shall be replaced with a single continuous hoop. Sway bar #A120L0020F, spring front #A120C0019H, spring rear #A120D0047H allowed. Lotus Elise oil accumulator system part # ALS3E0022J (accusump part #24026 and electric valve part #24270) is allowed. Lotus Track use chassis brace kit #lotac05377 allowed. Moroso Oil Pan part # 20970 is allowed. G-PAN Baffled Oil Pan is allowed. Rear cage braces may pass through rear window. Front spring, Eibach part # 600.225.0475 and rear spring, Eibach part # 800.225.0650 allowed. Lotus Exige (2006) may be supercharged by meeting all specifications in this classification.

Lotus Elise (05-10)	82.0 x 85.0 1796	2301	*16x8 (F) 17x8 (R)*	195/50 (F) 225/45 (R)	3.12, 2.05, 1.48, 1.17, 0.96, 0.82	4.53	(F) 288 Vented Disc (R) 288 Vented Disc	2090	Detachable hardtop shall be installed (latches shall be replaced with positive fasteners), convertible top shall be removed. An SCCA approved welded steel cage that is bolted to the chassis/frame is allowed. The floor may be modified to facilitate the rollcage mounting points. The stock extruded aluminum chassis satisfies the requirement for forward anti-intrusion braces. The factory roll hoop shall be replaced with a single continuous hoop. Lotus Elise oil accumulator system part # ALS3E0022J (accusump part #24026 and electric valve part #24270) is allowed. Lotus Track use chassis brace kit #lotac05377 allowed. Sway bar #A120L0020F, spring front #A120C0019H, spring rear A120D0047H allowed. Moroso Oil Pan part # 20970 is allowed. G-PAN Baffled Oil Pan is allowed. Rear cage braces may pass through rear window. Front spring, Eibach part # 600.225.0475 and rear spring, Eibach part # 800.225.0650 allowed.
Lotus Exige (2006)	82.0 x 85.0 1796	2301	16x6.5 (F) 17x7.5 (R)	195/50 (F) 225/45 (R)	3.12, 2.05, 1.48, 1.17, 0.96, 0.82	4.53	(F) 288 Vented Disc (R) 288 Vented Disc	2090	An SCCA approved welded steel cage that is bolted to the chassis/frame is allowed. The floor may be modified to facilitate the rollcage mounting points. The stock extruded aluminum chassis satisfies the requirement for forward anti-intrusion braces. The factory roll hoop shall be replaced with a single continuous hoop. Lotus Elise oil accumulator system part #ALS3E0022J (accusump part #24026 and electric valve part #24270) is allowed. Lotus Track use chassis brace kit #lotac05377 allowed. Sway bar #A120L0020F, spring front #A120C0019H, spring rear A120D0047H allowed. Moroso Oil Pan part # 20970 is allowed. G-PAN Baffled Oil Pan is allowed. Rear cage braces may pass through rear window. Front spring, Eibach part # 600.225.0475 and rear spring, Eibach part # 800.225.0650 allowed. *Sector 111 Eliminator V3 permitted to replace rear panel.*
Mazda Mazdaspeed3 (2007)	87.5 x 94.0 2260	2639	18 x 9	**255/55 Max**	3.54, 2.24, 1.54, 1.17, 1.09, 0.85	1-4: 3.94 5-6: 3.35	(F) 300 Vented Disc (R) 280 Solid Disc	3250	**Any spring up to a maximum spring rate of 800 pounds may be used Turbo Inlet Restrictor XXXmm**
Mazda Mazdaspeed3 (07-09)	87.5 x 94.0 2260	2639	18 x 9.5 (F & R)	255/50	3.54, 2.24, 1.54, 1.17, 1.09, 0.85	1-4: 3.94 5-6: 3.35	(F) 300 Vented Disc (R) 280 Solid Disc	2900	~~**35mm Turbo Inlet restrictor required.**~~ Mazda Motorsports Rear Swaybar Kit 32mm OD hollow Tube Part #: 0000-04-3420. Optional rear sway bar max 42mm (body and suspension mounting same as OEM). AEM cold-air intake (part# 21-488) is permitted. ~~Maximum spring rate 500 lbs/in (F), 700 lbs/in (R).~~ **Any spring up to a maximum spring rate of 800 pounds may be used Turbo Inlet Restrictor XXXmm**

Mazda Mazdaspeed3 (10-11)	87.5 x 94.0 2260	2309	18 x 9.5 (F & R)	255/50	3.21, 1.91, 1.37, 1.03, 0.95, 0.79	1-4: 4.19 5-6: 3.53	(F) 320 Vented Disc (R) 280 Solid Disc	2900	~~**35mm Turbo Inlet restrictor required.**~~ Mazda Motorsports Rear Swaybar Kit 32mm OD hollow Tube Part #: 0000-04-3420. Optional rear sway bar max 42mm (body and suspension mounting same as OEM). AEM cold-air intake (part# 21-488) is permitted. ~~Maximum spring rate 500 lbs/in (F), 700 lbs/in (R).~~ **Any spring up to a maximum spring rate of 800 pounds may be used Turbo Inlet Restrictor XXXmm**
Mazda MazdaSpeed Miata (04-05)	83.0 x 85.0 1839	2266	18 x 8 **or 9** (F) 18 x 9 (R)	245/45	3.76, 2.27, 1.65, 1.26, 1.00, 0.84	4.1	(F) 269 Vented Disc (R) 277 Solid Disc	*2480*	~~**Detachable hardtop shall be installed. Latches shall be replaced with positive fasteners. Convertible top assembly shall be removed. Mazdaspeed radiator part # 0000-01-5503 and suspension kit #K-SPEC-M5-SUS9 allowed. Ganton Accusump #24-026, Flex-a-lite install sandwich #3965, and related hoses, valve, and bracket allowed. Bell Engineering (BEGI) intercooler kit permitted #67022. Complete kit includes throttle inlet tube, cool air box and Forge Motorsports diverter valve. Kit must be used as a whole, including all hardware.**~~ **Member to request re-classing car, required.**
Nissan 350Z Track/ Touring/ Standard/ Nismo (03-08)	95.5 x 81.4 3498	104.3	18 x 9 (F) 18 x 10 (R)	245/40 or 225/45 (F) 265/35 or 245/45 (R) 285/30 (max) (F&R)	3.79, 2.32, 1.62, 1.27, 1.00, 0.79	3.54	(F) 296/324 Vented Disc (R) 292/332 Vented Disc	3168	The following are allowed: Track option Aero package, Nissan oil cooler kit #21300-RSZ33, Nissan power steering cooler kit #49790-RSZ30-US, Rear diff cover Nismo part #99996-35TDK, Nissan Mtspts. Nissan heavy duty spring kit part #99996-65Z3OUS, Nismo sway bar kit #99996-RSZ3OUS. This max. tire size supersedes TCS 9.1.10.D.7.b. Modifications to the stock fender liner is not permitted.
Pontiac Solstice GXP Coupe/ Convertible (07-09)	85.3 x 86.1 1998	2415	18 x 9.5	275/35	3.75, 2.26, 1.51, 1.00, 0.73	3.73	(F) 296 Vented Disc (R) 278 Solid Disc	*3200*	Detachable hardtop GM part #PCS-0664 shall be installed and convertible top shall be removed. Suspension option ZOK and Rear Spoiler (D52) allowed. This max tire size supersedes TCS 9.1.10.D.7.b. B&M cooler #70298 and Weldon Series 9200 pump may be used for differential and/ or transmission cooling. The mounting and wiring associated with the installation of these coolers is unrestricted provided it serves no other purpose. Ron Davis radiator part #1-38S006 allowed. Brake calipers and rotors from Chevrolet Cobalt SS (08-09) permitted - part numbers 25900763 - left front caliper, 25900764 - right front caliper, 25902073 - left rear caliper, 25902074 - right rear caliper, 25869424 - rear caliper bracket, 25994100 - front rotors, 15921402 - rear rotors. Any aftermarket top allowed if material, size, shape and weight are the same as factory top. **Turbo Inlet Restrictor XXXmm**

Porsche Boxster S (00-03)	93.0 x 78.0 3179	2415	17 x 7 **or 9** (F) 17 x 8.5 **or 9** (R)	205/50 (F) 255/40 (R)	3.82, 2.20, 1.52, 1.22, 1.02, 0.84	3.44	(F) 318 x 28 Vented & cross-drilled (R) 300 x 25 Vented & cross-drilled	2880	**~~OEM hardtop req'd (latches shall be replaced w/ positive fasteners). Convertible top shall be removed. Front spoiler, rear spoiler, and rocker panel extensions from OEM Porsche factory aero kit are permitted. Sport suspension pkg. is permitted. Factory bolt-in rollbar may be removed to facilitate the installation of the required rollcage.~~ Member to request re-classing car, required.**
Porsche Boxster S (2005)	93.0 x 78.0 3179	2415	18 x 8 **or 9** (F) 18 x 9 (R)	205/50 (F) 255/40 (R)	3.67, 2.05, 1.41, 1.13, 0.97, 0.82	3.87	(F) 318 x 28 Vented & cross-drilled (R) 300 x 25 Vented & cross-drilled	3240	**Member to request re-classing car, required.**
Porsche Caymen (2006)	96.0 x 78.0 3387	2416	18 x 8 **or 9** (F) 18 x 9 (R)	235/40 (F) 265/40 (R)	3.31, 1.95, 1.41, 1.13, 0.97, 0.82	3.88	(F) 318 Vented and Cross-drilled (R) 299 Vented and Cross-drilled	2775	**Member to request re-classing car, required.**
Porsche Caymen S (2006-2008)	96.0 x 78.0 3387	2416	18 x 8 **or 9** (F) 18 x 9 (R)	235/40 (F) 265/40 (R)	3.31, 1.95, 1.41, 1.13, 0.97, 0.82	3.88	(F) 318 Vented and Cross-drilled (R) 299 Vented and Cross-drilled	3300	**Member to request re-classing car, required.**
Porsche Caymen S (2010)	96.0 x 78.0 3387	2416	18 x 8 **or 9** (F) 18 x 9 (R)	235/40 (F) 265/40 (R)	3.31, 1.95, 1.41, 1.13, 0.97, 0.82	3.88	(F) 318 Vented and Cross-drilled (R) 299 Vented and Cross-drilled	3470	**Member to request re-classing car, required.**
Saturn Ion Redline (04-07)	86.0 x 86.1 1998	2629	18 x 9.5 (F & R)	255/50	3.38, 1.76, 1.18, 0.89, 0.71	4.05	(F) 296 Vented Disc (R) 270 Solid Disc	**2850**	The following GM parts are allowed: front springs part # CCS635, rear springs # CCS639, front control arms # CCS636 and CCS637, shrouding kit # CCS644. Griffin radiator # 9D-18194-01 allowed. Stage Two Supercharger kit, part #17803229 (includesBelt -#12597993 and Injector kit -#12597995) permitted. Optional rear sway bar max 42 mm (body and suspension mounting same as OEM). AEM cold-air intake (part# 21-532C) is permitted. ~~Maximum spring rate 500 lbs/in (F), 700 lbs/in (R).~~ **Any spring up to a maximum spring rate of 800 pounds may be used Requesting member input on smaller supercharger pulley size:**

Saturn Sky Red Line (07-09)	85.3 x 86.1 1998	2415	18 x 9.5	275/35	3.75, 2.26, 1.51, 1.00, 0.73	3.73	(F) 296 Vented Disc (R) 278 Solid Disc	**3250**	Detachable hardtop GM part #PCS-0664 shall be installed and convertible top shall be removed. Suspension option ZOK and Rear Spoiler (D52) allowed. This max tire size supersedes TCS 9.1.10.D.7.b. B&M cooler #70298 and Weldon Series 9200 pump may be used for differential and/or transmission cooling. The mounting and wiring associated with the installation of these coolers is unrestricted provided it serves no other purpose. Ron Davis radiator part #1-38S006 allowed. 38mm Turbo Inlet Restrictor required. Quantum Motorsports brake duct kit #09820 is allowed. Brake calipers and rotors from Chevrolet Cobalt SS (08-09) permitted - part numbers 25900763 - left front caliper, 25900764 - right front caliper, 25902073 - left rear caliper, 25902074 - right rear caliper, 25869424 - rear caliper bracket, 25994100 - front rotors, 15921402 - rear rotors. Any aftermarket top allowed if material, size, shape and weight are the same as factory top. **Turbo Inlet Restrictor XXXmm**
Volkswagen GTI, Jetta GLI (06-10)	82.5 x 92.8 1984	2578	17 x 8 **or 9** (F&R)	**255/45 Max** (F&R)	DSG: 3.46, 2.15, 1.46, 1.08, 1.10, 0.92 STD: 3.36, 2.09, 1.47, 1.10, 1.11, 0.93	DSG: 4.10 / 3.14 STD: 4.00, 3.09	(F) 312 Vented Disc (R) 286 Solid Disc	DSG @ **2900** STD @ **2900**	~~**35mm Turbo Inlet Restrictor required.** Spring kit #1K0 0 71 678 is permitted. VW Spring kit #1K0 071 678A allowed~~. **Any spring up to a maximum spring rate of 800 pounds may be used Turbo Inlet Restrictor XXXmm**

Class 3:

All Cars in class permitted the following changes:

- No Interiors
- Shock/Springs OEM only, unless specified
- **Maximum 2.5** degrees of negative chamber is allowed on front and rear suspensions. Strut suspensions may de-camber wheels by the use of eccentric bushings, eccentric bolts (crash bolts) at the strut-to-spindle, and/or by use of slotted adjusters at the top of the strut mounting plate. If upper strut slotted plates are used, they shall be located on existing chassis structure, utilizing the manufacturer's original bolt holes and may not serve as reinforcement for that structure. On other forms of suspension, camber adjustment may be achieved by the use of shims and/or eccentric bushings.
- **OEM ECU only (Re-Flashing permitted)**
- Sway bars not specified, may be requested

Class 3	Bore x Stroke(mm)/ Displ. (cc)	Wheelbase (mm)	Track F & R (mm)	Wheel Size(in.)/ Mat'l.	Tire Size (stock)	Gear Ratios	Final Drive	Brakes (mm)	Weight (lbs)	Notes:
Acura Integra GS-R VTEC (3 or 4 door) (95-01)	81.0 x 87.2 1797	2571	1476 / 1471 or 1481 / 1476 w/ alt. Susp.	15 x 6 Alum	195/55	3.23, 1.90, 1.36, 1.03, 0.79	4.4	(F) 262 x 21 Vented Disc (R) 239 x 10 Solid Disc	**TBA**	~~Springs (F) P/N 51401-ST7-R01, (R) P/N 52441-ST7-R01, Shocks P/N (LF) 51606-ST7-R01, (RF) 51605-ST7-R01, (Rear) 52611-ST7-R01,~~ Shock bushings (R) P/N 52622-SR3-003, rear control arms P/N (LR) 52360-ST7-R00, (RR) 52350-ST7-R00 from Type R, and Mugen 26mm rear sway bar. **-Any non-adjustable shock absorber is allowed. The shock must be installed in the original mounting locations. Remote shocks are not permitted. Threaded shock bodies or adjusters may be used. - Any spring up to a maximum spring rate of 800 pounds may be used - Cold Air Intake system (pictures and/or parts have to be sent to Topeka for approval) - OEM Factory Limited Slip (member to supply part number to Topeka for approval) - OEM bump stops**

Acura RSX Type-S (05-06)	86.0 x 86.0 1998	2570	1487 / 1486	17 x 7 (F&R)	215/45 (F&R)	3.27, 2.13, 1.52, 1.15, 0.92, 0.74	4.765	(F) 300 Vented Disc (R) 260 Solid Disc	2945	Factory limited slip from 06-08 Civic Si, P/N 41200-PNT-003 permitted.
Acura RSX Type-S (02-04)	86.1 x 86.0 1988	2570	1482 / 1481	16 x 6.5 Alum	205/55	3.27, 2.13, 1.52, 1.15, 0.92, 0.74	4.4	(F) 300 x 26 Vented Disc (R) 260 x 10 Solid Disc	2845	Factory limited slip from 06-08 Civic Si, P/N 41200-PNT-003 permitted.
Audi A4 V-6 (96-01)	82.5 x 86.4 2771	2606	1496 / 1473	16 x 7 Alum	205/55	3.67, 1.99, 1.41, 1.00, 0.74	3.2	(F) 277 x 25 Vented Disc (R) 244 x 15 Solid Disc	3055	
BMW Z4 2.5L (03-05)	84.0 x 75.0 2494	2495	1473 / 1524	16 x 7 Alum	225/50	4.23, 2.52, 1.66, 1.22, 1.00	3.46	(F) 286 Vented Disc (R) 280 Solid Disc	3195	Detachable hardtop shall be installed (latches shall be replaced w/ positive fasteners), convertible top shall be removed. Alternate wheel BMW #36-11-1-095-058 16 x 7 is permitted.
Chevrolet Cobalt SS Coupe (06-07)	88.0 x 98.0 2384	2628	1492 / 1475	17 x 7 Alum	205/50	3.58, 2.02, 1.35, 0.98, 0.69	3.94	(F) 296 Vented Disc (R) 270 Solid Disc	**TBA**	**Any non-adjustable shock absorber is allowed. The shock must be installed in the original mounting locations. Remote shocks are not permitted. Threaded shock bodies or adjusters may be used. - Any spring up to a maximum spring rate of 500 pounds front and 800 pound rear may be used - Cold Air Intake system (pictures and/or parts have to be sent to Topeka for approval) OEM Factory Limited Slip (member to supply part number to Topeka for approval) - OEM bump stops**
Chevrolet Cobalt Sport (2008)	88.0 x 98.0 2384	2628	1492 / 1475	17 x 7 Alum	205/50	3.58, 2.02, 1.35, 0.98, 0.69	3.84	(F) 296 Vented Disc (R) 270 Solid Disc	**TBA**	**Any non-adjustable shock absorber is allowed. The shock must be installed in the original mounting locations. Remote shocks are not permitted. Threaded shock bodies or adjusters may be used. - Any spring up to a maximum spring rate of 500 pounds front and 800 pound rear may be used - Cold Air Intake system (pictures and/or parts have to be sent to Topeka for approval) OEM Factory Limited Slip (member to supply part number to Topeka for approval) - OEM bump stops**
Chevrolet Camaro V-6 (96-02)	96.5 x 86.36 3790	2568	1552 / 1549	16 x 8	245/50	3.75, 2.19, 1.41, 1.00, 0.72	3.42	(F) 302 x 23 Disc (R) 305 x 25 Disc	3300	Performance option permitted, consisting of limited slip differential, uplevel steering rack, dual exhaust. GM PS cooler #10417037 allowed. Z-28 front sway bar (30mm) and rear sway bar (19mm) allowed. GM 1LE front (#26032907 32mm) and rear (#10021221 21 mm) sway bar allowed. Front spring rate shall be 280-320 lbs. per inch and the minimum free length is 13 ¾ inches. Koni Shocks, 8241-1139 (F) and 8241-1140 (R) permitted. *SP-141 front and rear springs permitted; SP-8316 front sway bar and SP-8327 rear sway bar permitted; UMI-2006 shock tower brace permitted.*
Chrysler Neon ACR SOHC (4 door) (01-02)	87.5 x 83.0 1995	2667	1474 / 1476	15 x 6 Alum	185/60	3.50, 1.96, 1.36, 0.97, 0.81	3.94	(F) 257 x 22 Vented Disc (R) 270 x 9 Solid Disc	**TBA**	**Any non-adjustable shock absorber is allowed. The shock must be installed in the original mounting locations. Remote shocks are not permitted. Threaded shock bodies or adjusters may be used. - Any spring up to a maximum spring rate of 500 pounds front and 800 pound rear may be used - Cold Air Intake system (pictures and/or parts have to be sent to Topeka for approval) OEM Factory Limited Slip (member to supply part number to Topeka for approval) - OEM bump stops**
Ford Focus SVT (02.5-04)	84.0 x 88.0 2000	2616	1494 / 1486	17 x 7 Alum	215/45	(overall) 12.7, 7.7, 5.7, 4.6, 3.8, 3.1	2.88 & 4.25	(F) 300 Vented Disc (R) 280 Solid Disc	**TBA**	*Engine breather hose may be routed to a catch can; the resultant opening in the air box must be plugged.* **Any non-adjustable shock absorber is allowed. The shock must be installed in the original mounting locations. Remote shocks are not permitted. Threaded shock bodies or adjusters may be used. - Any spring up to a maximum spring rate of 500 pounds front and 800 pound rear may be used - Cold Air Intake system (pictures and/or parts have to be sent to Topeka for approval) OEM Factory Limited Slip (member to supply part number to Topeka for approval) - OEM bump stops**

Ford Contour SVT (98-00)	82.4 x 79.5 2544	2705	1504 / 1486	16 x 6.5 Alum	1998: 205/55 99-00: 215/50	3.42, 2.14, 1.45, 1.03, 0.77	4.06	(F) 279 Disc (R) 251 Disc	3180	**Member to request re-classing car, required.**
Ford Focus ZX4 ST (05-06)	87.38 X 93.98 2300	2614	1496 / 1491	16 x 6	205/60	3.42, 2.14, 1.45, 1.03, 0.77	3.82	(F) 278 Vented Disc (R) 251 Solid Disc	**TBA**	*Engine breather hose may be routed to a catch can; the resultant opening in the air box must be plugged.* **Any non-adjustable shock absorber is allowed. The shock must be installed in the original mounting locations. Remote shocks are not permitted. Threaded shock bodies or adjusters may be used. - Any spring up to a maximum spring rate of 500 pounds front and 800 pound rear may be used - Cold Air Intake system (pictures and/or parts have to be sent to Topeka for approval) OEM Factory Limited Slip (member to supply part number to Topeka for approval) - OEM bump stops**
Ford Mustang V6 (05-10)	100.4 x 84.4 4000	2724	1582.5 1587.5	16 x 7 17 x 8 (F&R)	245/40 (max tire size)	3.75, 2.19, 1.41, 1.00, 0.72	3.31	(F) 292.1 Vented Disc (R) 299.8 Vented Disc	3450	ABS (option code 552) allowed. FR3 Handling Pack # M-2007-FR3V6 allowed. The kit includes: Dampers M-18000-A, Lowering Springs M-5300-N, Sway Bars M-5490-C, Strut Tower Brace M-20201-F. The ECU may be re-flashed by a Ford dealer to disable the speed limiting function; a letter from the dealer stating that this, and only this change, has been made shall be made available to race officials on demand. Ford Positraction LSD part #M-4204-C75 is allowed. Panhard bar, part # BAR-M-4264-A permitted; must be set at same length as a stock bar, center mounting hole to center mounting hole +/- 0.25 inch. An alternative steel drive shaft is permitted; this drive shaft is otherwise unrestricted, but no modifications to other components are permitted to facilitate its installation.
Ford Mustang V-6 (01-04)	96.8 x 86.0 3797	2573	1529 / 1539	16 x 7.5 Alum	225/55	3.37, 1.99, 1.33, 1.00, 0.67	3.27		3240	Ford Positrac LSD, part # M-4204-C75, premium trim package 012A allowed (ABS, traction control, 16 x 7.5 forged or cast aluminum wheels).
Honda Accord LX & EX (03-05)	87.0 x 99.0 2354	2670	1552/ 1554	16 x 6.5	205/60	3.27, 1.77, 1.15, 0.87, 0.66	4.39	(F)282 Vented Disc (R)259 Solid Disc	**TBA**	LX model must use rear drum brakes. **Any non-adjustable shock absorber is allowed. The shock must be installed in the original mounting locations. Remote shocks are not permitted. Threaded shock bodies or adjusters may be used. - Any spring up to a maximum spring rate of 800 pounds may be used - Cold Air Intake system (pictures and/or parts have to be sent to Topeka for approval) OEM Factory Limited Slip (member to supply part number to Topeka for approval) - OEM bump stops**
Honda Accord LX & EX (06-07)	87.0 x 99.0 2354	2670	1553/ 1554	16 x 6.5	205/60	3.27, 1.77, 1.15, 0.87, 0.66	4.39	(F)282 Vented Disc (R)259 Solid Disc	**TBA**	**Any non-adjustable shock absorber is allowed. The shock must be installed in the original mounting locations. Remote shocks are not permitted. Threaded shock bodies or adjusters may be used. - Any spring up to a maximum spring rate of 800 pounds may be used - Cold Air Intake system (pictures and/or parts have to be sent to Topeka for approval) OEM Factory Limited Slip (member to supply part number to Topeka for approval) - OEM bump stops**
Honda Accord LX-S/EX/EX-L (08-09)	87.0 x 99.0 2354	2741	1580 / 1580	17 x 7.5	225/50	3.27, 1.78, 1.15, 0.87, 0.65	4.39	(F) 282 Vented Disc (R) 282 Solid Disc	**TBA**	**Any non-adjustable shock absorber is allowed. The shock must be installed in the original mounting locations. Remote shocks are not permitted. Threaded shock bodies or adjusters may be used. - Any spring up to a maximum spring rate of 800 pounds may be used - Cold Air Intake system (pictures and/or parts have to be sent to Topeka for approval) OEM Factory Limited Slip (member to supply part number to Topeka for approval) - OEM bump stops**

Honda Civic Coupe (96-00)	75.0 x 90.0 1590	2621	1476 / 1476	14 x 4.5	185/65	3.25, 1.90, 1.25, 0.91, 0.70	4.25	(F) 262 Vented Disc (R) 201 Drum	2500	Honda Motorsports performance package (#17D50-S02-C1) permitted. Performance kit includes: Shocks (F): Koni #8042-1001, Shocks (R): Koni #8042-1002, Springs (F): Eibach Kit #9328.140, 350# rate, Springs (R): Eibach Kit #9328.140, 500# rate, Swaybar (R): Neuspeed #H43.22.72, 22mm, Camber: +/- 2º from service manual specs, Wheels: Enkei #ENK13214649SM, 14 x 6".
Honda Civic Coupe Si (99-00)	81.0 x 77.4 1595	2621	1476 / 1476	15 x 6	195/55	3.23, 2.11, 1.46, 1.11, 0.85	4.4	(F) 262 x 20 Disc (R) 239 x 8 Disc	**TBA**	**Any non-adjustable shock absorber is allowed. The shock must be installed in the original mounting locations. Remote shocks are not permitted. Threaded shock bodies or adjusters may be used. - Any spring up to a maximum spring rate of 500 pounds may be used - Cold Air Intake system (pictures and/or parts have to be sent to Topeka for approval) OEM Factory Limited Slip (member to supply part number to Topeka for approval) - OEM bump stops**
Honda Civic SI (02-03)	86.0 x 86.0 1998	2570	1468 / 1469	15 x 6.5 Alum	195/60	3.06, 1.77, 1.21, 0.92, 0.74	4.5	(F) 262 (R) 260	**TBA**	**Any non-adjustable shock absorber is allowed. The shock must be installed in the original mounting locations. Remote shocks are not permitted. Threaded shock bodies or adjusters may be used. - Any spring up to a maximum spring rate of 500 pounds may be used - Cold Air Intake system (pictures and/or parts have to be sent to Topeka for approval) OEM Factory Limited Slip (member to supply part number to Topeka for approval) - OEM bump stops**
Honda Civic Si (06-09)	86.1 x 86.0 1998	2649	1499 / 1527	17 x 7 Alum	215/45	3.27, 2.13, 1.52, 1.15, 0.92, 0.66	4.77	(F) 300 Vented Disc (R) 260 Solid Disc	3000	Honda Factory Performance Suspension Kit #08W60-SVB-100 allowed.
Honda Civic Si (2012)	87.0 x 99.0 2354	2620 (2 dr) / 2670 (4 dr)	1499/ 1522	17 x 7 Alloy	215/45	3.27, 2.04, 1.43, 1.07, 0.83, 0.65	4.76	(F)300 x 25 Vented (R) 260 x 9 Solid	3000	39mm flat plate restrictor required. Honda Sport Suspension Kit, part number 08W60-TS9-100 permitted.
Hyundai Elantra GLS (11-12)	81.0 x 87.2 1797	2649	1550/ 1562	15 steel	195/65	3.62, 1.96, 1.29, 1.02, 0.87, 0.76	4.33	(F) 280x23 Vented (R) 262x10 Solid	2600	16 inch or 17 inch alloy wheels permitted. 205/55/16 or 215/45/17 tires permitted. **Member to request re-classing car, required.**
Hyundai Tiburon V-6 (03-08)	86.7 x 75.0 2657	2530	1490 / 1490	17 x 7 Alum	215/45	3.15, 1.94, 1.33, 1.06, 0.86, 0.70	4.43	(F) 280 x26.2 Vented Disc (R) 257x10.0 Solid	**TBA**	*Accusump permitted.* **Any non-adjustable shock absorber is allowed. The shock must be installed in the original mounting locations. Remote shocks are not permitted. Threaded shock bodies or adjusters may be used. - Any spring up to a maximum spring rate of 500 pounds front and 800 pound rear may be used - Cold Air Intake system (pictures and/or parts have to be sent to Topeka for approval) OEM Factory Limited Slip (member to supply part number to Topeka for approval) - OEM bump stops**
Kia Forte Koup and Sedan LX/ EX (2010-)	86.0 x 86.0 1998	2649	1560/ 1565	17 x 6 Alloy	205/55	3.31, 1.97, 1.19, 0.90, 0.70	4.19	(F) 280 Vented (R) 262 Solid	2790	**Member to request re-classing car, required.**
Kia Forte Koup and Sedan SX (2010-)	88.0 x 97.0 2359	2649	1560/ 1565	17 x 7 Alloy	215/45	3.27,1.93, 1.64, 1.22, 1.03, 0.83	4.06 (1, 2) 2.96 (3, 4, 5, 6)	(F) 300 Vented (R) 262 Solid	3170	**Member to request re-classing car, required.**
Mazda3 s (04-09)	87.5 x 94.0 2260	2639	1529 / 1514	16x6.5 or 17x6.5	205/50 or 205/55	3.31, 1.84, 1.31, 0.97, 0.76	4.1	(F) 300 Vented DIsc (R) 280 Solid Disc	**TBA**	ABS option allowed. Miata speedometer gear #M527-17-400A permitted. **Any non-adjustable shock absorber is allowed. The shock must be installed in the original mounting locations. Remote shocks are not permitted. Threaded shock bodies or adjusters may be used. - Any spring up to a maximum spring rate of 500 pounds front and 800 pound rear may be used - Cold Air Intake system (pictures and/ or parts have to be sent to Topeka for approval) - OEM bump stops**

Mazda3 s (2010)	89.0 x 100.0 2489	2640	1530 / 1514	17 x 7	205/50	3.45, 2.06, 1.39, 1.03, 0.84, 0.72	4.11	(F)300 Vented Disc (R)280 Solid Disc	**TBA**	**Any non-adjustable shock absorber is allowed. The shock must be installed in the original mounting locations. Remote shocks are not permitted. Threaded shock bodies or adjusters may be used. - Any spring up to a maximum spring rate of 500 pounds front and 800 pound rear may be used - Cold Air Intake system (pictures and/ or parts have to be sent to Topeka for approval) - OEM bump stops**
~~Mazda MX-5 / Miata (01-05)~~	~~83.0 x 85.0 1839~~	~~2266~~	~~1435 / 1461~~	~~15 x 6.5 Alum~~	~~195/50~~	~~3.14, 1.89, 1.33, 1.00, 0.81~~	~~4.3~~	~~(F) 254 Vented Disc (R) 252 Solid Disc~~	~~2700~~	
Mazda Protégé LX (01-03)	83.0 x 92.0 1991	2610		15 x 6 Alum		3.31, 1.84, 1.31, 0.97, 0.76	4.11	(F) 259 x 23 Vented Disc (R) 201 x 36 Drum	2730	LX may update to the ES brakes. May update to MP3 specs. **Member to request re-classing car, required.**
Mazda Protégé ES (99-00)	83.0 x 85.0 1839	2611	1471 / 1471	15	195/55	3.42, 1.84, 1.29, 1.03, 0.78	4.11	(F) 260 Vented Disc (R) 201 Drum	2630	Mazda Performance Package P/N K-PRO-99-SSC (Includes: Bilstein strut cartridges front and rear (p/n P30-0032), Eibach 2.5" diameter ERS springs front (325lbs, 7" free length) and rear (600lbs, 8" free length), front negative camber –2 degrees.) ABS brakes permitted. **Member to request re-classing car, required.**
Mazda Protégé ES (01-03)	83.0 x 92.0 1991	2610		16 x 6 Alum		3.31, 1.84, 1.31, 0.97, 0.76	4.11	(F) 259 x 23 Vented Disc (R) 259 x 23 Vented Disc	2730	May update to MP3 specs. **Member to request re-classing car, required.**
Mazda Protégé MP3 (2001)	83.0 x 92.0 1991	2610	1455 / 1460	17 x 7 Alum	205/45	3.31, 1.84, 1.31, 0.97, 0.76	4.11	(F) 10.2 x .9 Vented Disc (R) 10.3 x .9 Solid Disc	2780	**Member to request re-classing car, required.**
Mazda Protégé 5 (02-03)	83.0 x 92.0 1991	2610	1465 / 1470	16 x 6 Alum	195/50	3.31, 1.84, 1.31, 0.97, 0.76	4.11	(F) 10.2 x .9 Vented Disc (R) 10.3 x .4 Solid Disc	2745	**Member to request re-classing car, required.**
Mazda RX-8 (04-08)	2600	2703	TBA	18 X 8 (F&R)	225/45 (F&R)	3.76, 2.27, 1.65, 1.19, 1.0, 0.84 Alt: 3.82, 2.26, 1.54, 1.18, 1.00, 0.79	4.44 Alt: 4.78	(F) 323 Vented Disc (R) 303 Vented Disc	3220	Mazdaspeed radiator #0000-01-8501 allowed. ~~Mazdaspeed front sway bar kit #0000-04-8302-AD allowed. Mazdaspeed coil spring kit #QSEA-34-01Z allowed.~~ Use of 2009 R3 transmission is permitted with alternate gear ratios as listed. R3 transmission must be paired with the listed alternate final drive. ~~**Mazda Motorsports Exhaust Header Part # 0000-06 and Mazda Motorsports Air Intake Part # 0000-06-8601.**~~
Mazda RX-8 R3 (2009)	2600	2703	TBA	19 x 8 (F&R)	225/40 (F&R)	3.82, 2.26, 1.54, 1.18, 1.00, 0.79	4.78	(F) 323 Vented Disc (R) 303 Vented Disc	3220	~~**Mazda Motorsports Exhaust Header Part # 0000-06 and Mazda Motorsports Air Intake Part # 0000-06-8601.**~~
Mazda MX-5 / Miata Sport (99-00)	83.0 x 85.0 1839	2266	1435 / 1461	15 X 6	195/50	3.14, 1.89, 1.33, 1.00, 0.81	4.3	(F) 255 Vented Disc (R) 252 Solid Disc	2380	Rear interior brace may be removed for cage installation. As delivered w/ no performance kits or parts deletions. Detachable hardtop shall be installed (latches shall be replaced with positive fasteners), convertible top shall be removed. Spec Miata front and rear sway bar permitted. Rear sway bar must use middle hole. Allow Spec Miata suspension kit with the following perch measurements: Front: top-1.75" bottom-1.75" Rear: top-1.50" bottom-2.00" Measurements are taken from above(top)/below(bottom) the spring perch to the top/bottom of the collar. Spring perch settings must be locked with the set screw.

Mazda MX-5 / Miata (01-05)	83.0 x 85.0 1839	2266	15" wheel: 1435 / 1461 16" wheel: 1448 / 1474	16 x 6.5 Alum	15": 195/50 16": 205/45	3.14, 1.89, 1.33, 1.00, 0.81	4.3	(F) 254 Vented Disc (R) 252 Solid Disc Suspension Package: (F) 269.5 Vented Disc (R) 267.9 Solid Disc	2405	Factory "Sports" pkg. allowed. Optional Torsen limited slip differential allowed. Power steering delete option allowed. Detachable hardtop shall be installed (latches shall be replaced with positive fasteners), convertible top shall be removed. Spec Miata front and rear sway bar permitted. Rear sway bar must use middle hole. Allow Spec Miata suspension kit with the following perch measurements: Front: top-2.00" bottom-1.50" Rear: top-1.75" bottom-1.75" Measurements are taken from above(top)/below(bottom) the spring perch to the top/bottom of the collar. Spring perch settings must be locked with the set screw. **Any non-adjustable shock absorber is allowed. The shock must be installed in the original mounting locations. Remote shocks are not permitted. Threaded shock bodies or adjusters may be used. - Any spring up to a maximum spring rate of 500 pounds front and 500 pound rear may be used**
Mazda MX-5 (06-08)	87.38 x 83.06 1999	2329	1491 / 1496	16 x 6.5 17 x 7 Alum	205/50	3.14, 1.89, 1.33, 1.00, 0.81 or 3.82, 2.26, 1.64, 1.18, 1.00, 0.83	4.1	(F) 289.6 Vented Disc (R) 279.4 Solid Disc	MSR: 2600 Non-MSR: 2500	Detachable hardtop shall be installed (latches shall be replaced w/ positive fasteners), convertible top shall be removed. Factory bolt-in roll bar/cross member may be removed to facilitate roll cage installation. MSR option permitted.
Mazda MX-5 Touring/ Grand Touring (09-11)	87.4 x 83.1 2000	2330	1491/ 1497	17x7 Alum	205/45	3.82, 2.26, 1.64, 1.18, 1.00, 0.83	4.1	(F)290 Vented Disc (R)280 Solid Disc	**TBA**	~~**Optional suspension package permitted. MSR option permitted including Bilstein shocks (F) 0000-04-5991-BL, (R) 0000-04-5992-BL.**~~ **Any non-adjustable shock absorber is allowed. The shock must be installed in the original mounting locations. Remote shocks are not permitted. Threaded shock bodies or adjusters may be used. - Any spring up to a maximum spring rate of 500 pounds front and 800 pound rear may be used - Cold Air Intake system (pictures and/or parts have to be sent to Topeka for approval) - OEM bump stops**
Mazda6 s (03-07)	89.0 x 79.5 2967	2675	1530 / 1520	16 x 7 17 x 7 18 x 7	205/60 215/45	3.80, 2.13, 1.36, 0.94, 0.69	3.71	(F) 282 Vented Disc (R) 280 Solid Disc	**TBA**	~~**Rear sway bar: Mazdaspeed #GRMS-8M-L06-R and front sway bar #GRMS-8M-L06-F permitted.**~~ **Any non-adjustable shock absorber is allowed. The shock must be installed in the original mounting locations. Remote shocks are not permitted. Threaded shock bodies or adjusters may be used. - Any spring up to a maximum spring rate of 500 pounds front and 800 pound rear may be used - Cold Air Intake system (pictures and/or parts have to be sent to Topeka for approval) - OEM bump stops**
Mini Cooper S (02-04)	77.0 x 85.8 1598	2467	1453 / 1461	Any stock wheel available allowed. Must have BMW or MINI identification. Entrant must supply proof that wheel was offered in USA from MINI in the form of a factory document.	195/55 or 205/55	4.17, 2.62, 1.97, 1.61, 1.33, 1.09	2.74	(F) 277 Vented DIsc (R) 259 Solid Disc	**TBA**	~~**JCW struts (F)31-31-6-768-410 (R)33-52-6-768-412, springs (F)31-33-6-768-415 (R)33-53-6-768-418, and Mini Mania strut tower plate NMS7300 permitted. Factory limited slip from 05-06 Cooper S permitted. Ireland Engineering Mini Cooper Fixed Camber Plates 4/2002-2006 part "minicamber" permitted.**~~ **Any non-adjustable shock absorber is allowed. The shock must be installed in the original mounting locations. Remote shocks are not permitted. Threaded shock bodies or adjusters may be used. - Any spring up to a maximum spring rate of 500 pounds front and 800 pound rear may be used - Cold Air Intake system (pictures and/or parts have to be sent to Topeka for approval) - OEM bump stops**

Mini Cooper S (05-06)	77.0 x 85.8 1598	2467	1453 / 1461	Any stock wheel available allowed. Must have BMW or MINI identification. Entrant must supply proof that wheel was offered in USA from MINI in the form of a factory document.	195/55 or 205/55	overall: 12.79, 7.79, 5.65, 4.62, 3.83, 3.13	N/A	(F) 277 Vented DIsc (R) 259 Solid Disc	2750	~~**Convertible model not allowed. Factory optional limited slip differential allowed. JGW struts (F)31-31-6-768-410 (R)33-52-6-768-412, springs (F)31-33-6-768-415 (R)33-53-6-768-418, and Mini Mania strut tower plate NMS7300 permitted. Ireland Engineering Mini Cooper Fixed Camber Plates 4/2002-2006 part "minicamber" permitted.**~~ **Any non-adjustable shock absorber is allowed. The shock must be installed in the original mounting locations. Remote shocks are not permitted. Threaded shock bodies or adjusters may be used. - Any spring up to a maximum spring rate of 500 pounds front and 800 pound rear may be used - Cold Air Intake system (pictures and/or parts have to be sent to Topeka for approval) - OEM bump stops**
Mitsubishi Eclipse GT (00-05)	91.2 x 75.9 2972	2561	1509 / 1509	17 x 6.5	215/50	3.33, 2.10, 1.41, 1.03, 0.76	3.74	(F) 277 x 23 Vented Disc (R) 262 x 11 Solid Disc	3170	**Member to request re-classing car, required.**
Nissan Sentra Spec-V (07-08)	89.0 x 100.0 2488	2535	1466 / 1446	17 x 7 Alum	225/45	3.15, 1.94, 1.39, 1.06, 0.81, 0.63	4.13	(F) 305 Vented Disc (R) 278 Solid Disc	**TBA**	Factory Brembo brakes allowed. OEM optional limited slip differential permitted. **Any non-adjustable shock absorber is allowed. The shock must be installed in the original mounting locations. Remote shocks are not permitted. Threaded shock bodies or adjusters may be used. - Any spring up to a maximum spring rate of 500 pounds front and 800 pound rear may be used - Cold Air Intake system (pictures and/or parts have to be sent to Topeka for approval) - OEM bump stops**
Nissan Sentra SER (02-03)	89.0 x 100.0 2488	2535	1476 / 1455	16 x 6	195/55	3.15, 1.84, 1.26, 0.95, 0.77	4.133	(F) 280 x 22 Vented Disc (R) 258 x 9 Solid Disc	**TBA**	**Any non-adjustable shock absorber is allowed. The shock must be installed in the original mounting locations. Remote shocks are not permitted. Threaded shock bodies or adjusters may be used. - Any spring up to a maximum spring rate of 500 pounds front and 800 pound rear may be used - Cold Air Intake system (pictures and/or parts have to be sent to Topeka for approval) - OEM bump stops**
Nissan Sentra SER Spec-V (02-04)	89.0 x 100.0 2488	2535	1466 / 1446	17 x 7 Alum	215/45	3.15, 1.94, 1.39, 1.06, 0.81, 0.63	4.13	(F) 280 x 22 Vented Disc (R) 232 x 7 Solid Disc	**TBA**	**Any non-adjustable shock absorber is allowed. The shock must be installed in the original mounting locations. Remote shocks are not permitted. Threaded shock bodies or adjusters may be used. - Any spring up to a maximum spring rate of 500 pounds front and 800 pound rear may be used - Cold Air Intake system (pictures and/or parts have to be sent to Topeka for approval) - OEM bump stops**
Pontiac Firebird V-6 (96-02)	96.5 x 86.36 3790	2568	1542 / 1539	16 x 8	245/50	3.75, 2.19, 1.41, 1.00, 0.72	3.42	(F) 302 x 23 Disc (R) 305 x 25 Disc	3300	Performance option permitted, consisting of limited slip differential, uplevel steering rack, dual exhaust. GM PS cooler #10417037 allowed. Z-28 front sway bar (30mm) and rear sway bar (19mm) allowed. GM 1LE front (#26032907 32mm) and rear (#10021221 21 mm) sway bar allowed
Pontiac Solsitce (06-09)	88.0 x 98.0 2384	2415	1543 / 1561	18 x 8 Alum	245/45	3.75, 2.26, 1.37, 1.00, 0.73 or 3.75, 2.26, 1.51, 1.00, 0.73	3.91	(F) 296 Vented Disc (R) 278 Solid Disc	2900	Detachable hardtop GM part # PCS-0664 shall be installed (latches shall be replaced w/ positive fasteners), convertible top shall be removed. Limited slip differential (G80), factory ABS (JL), and suspension option (ZOK) allowed. **Cold Air Intake system (pictures and/or parts have to be sent to Topeka for approval)**
Saturn SC2 Coupe (97-00)	82.0 x 90.0 1901	2601	1443 / 1422	15	195/60	3.25, 2.06, 1.42, 1.03, 0.73	4.06	(F) 251 Disc (R) 245 Disc (R) 200 x 30 Drum	2475	Saturn SSC performance package (SPS # PKG-SSC-9798). Performance kit includes: Shocks (F): Carerra #54165/31552B4, Shocks (R): Carerra #54166/32642B4, Springs (F): H&R #54341F, Springs (R): H&R #54341R, Swaybar (R): Sway-Away #19516, Camber: -2.5 Degrees max. (F&R), Wheels: .250 max. wheel spacer per wheel. ABS brakes permitted. **Member to request re-classing car, required.**

Saturn SC2 Coupe (01-03)	82.0 x 90.0 1901	2601	1443 / 1422	15	195/60	3.25, 2.06, 1.42, 1.03, 0.73	4.06	(F) 251 Disc (R) 245 Disc (R) 200 x 30 Drum	2300	ABS brakes permitted. **Member to request re-classing car, required.**
Saturn SL2 (97-00)	82.0 x 90.0 1901	2601	1443 / 1422	15	185/65 205/50 (max)	3.25, 2.06, 1.42, 1.03, 0.73	4.06	(F) 251 Disc (R) 245 Disc (R) 200 x 30 Drum	2560	Saturn SSC performance package (SPS # PKG-SSC-9798). Performance kit includes: Shocks (F): Carerra #54165/31552B4, Shocks (R): Carerra #54166/32642B4, Springs (F): H&R #54341F, Springs (R): H&R #54341R, Swaybar (R): Sway-Away #19516, Camber: -2.5 Degrees max. (F&R), Wheels: .250" max. wheel spacer per wheel. ABS brakes permitted. A max. tire size of 205/50 is permitted based on availability of performance tires; this max. size supersedes SS tire rule in SSCS section 9.1.7.E.7. **Member to request re-classing car, required.**
Saturn SL2 (01-03)	82.0 x 90.0 1901	2601	1443 / 1422	15	185/65	3.25, 2.06, 1.42, 1.03, 0.73	4.06	(F) 251 Disc (R) 245 Disc (R) 200 x 30 Drum	2560	ABS brakes permitted. **Member to request re-classing car, required.**
Scion tC (03-07)	88.5 x 96.0 2326	2700	1506 / 1506	17 x 7 Alum	215/45	3.54, 2.05, 1.33, 0.97, 0.78	4.24	(F) 275 Vented Disc (R) 269 Solid Disc	2900	**Member to request re-classing car, required.**
Subaru Impreza (non-turbo) (04-06)	99.5 x 79.0 2457	2524.8	1485.9 1480.9	16 x 6.5 (F&R)	205/55 (F&R)	3.45, 2.06, 1.45, 1.09, 0.78	4.11	(F) 274.3 Vented Disc (R) 261.6 Solid Disc	3135	**Member to request re-classing car, required.**
Subaru Impreza (2008-11)	99.5 x 79.0 2457	2620	1495/ 1495	16 x 6.5 Alloy	205/55	3.45, 2.06, 1.45,1.09, 0.78	3.9	(F) 255 x24 Vented (R) 280 x10 Solid	3150	**Member to request re-classing car, required.**
Toyota Celica GTS (00-05)	*82.0 x 85.0 1796*	*2598*	*1488/ 1478*	*16 x 7 Alloy*	*205/50*	*3.17, 2.05, 1.48, 1.17, 0.92, 0.73*	*4.53*	*(F) 280 Vented (R) 262 Solid*	**TBA**	*~~TRD Shocks/Springs Part #PTR11-20000-05 permitted.~~ TRD Sway Bars Part #PTR06-20002-01 permitted. TRD Limited Slip Part #41301-ST804. ABS option allowed Canton Accusump #24-026, install sandwitch #24-700, valve #24-260, and related hoses and brackets allowed.* **Any non-adjustable shock absorber is allowed. The shock must be installed in the original mounting locations. Remote shocks are not permitted. Threaded shock bodies or adjusters may be used. - Any spring up to a maximum spring rate of 800 pounds may be used - Cold Air Intake system (pictures and/or parts have to be sent to Topeka for approval) - OEM bump stops**
Toyota MR-2 Spyder 16V DOHC (01-05)	2001: 79.0 x 91.5 1794 02-03: 81.0 x 77.0 1587	2450	1475 / 1460	01-02: (F) 15 x 6 (R) 15x6.5 03-05: (F) 15 x 6 (R) 16 x 7	(F) 185/55 01-02(R) 205/50 03-05(R) 215/45	3.17, 1.90, 1.39, 1.03, 0.82	3.25		**TBA**	Detachable hardtop shall be installed (latches shall be replaced w/ positive fasteners), convertible top shall be removed. **Any non-adjustable shock absorber is allowed. The shock must be installed in the original mounting locations. Remote shocks are not permitted. Threaded shock bodies or adjusters may be used. - Any spring up to a maximum spring rate of 500 pounds may be used - Cold Air Intake system (pictures and/or parts have to be sent to Topeka for approval) - OEM bump stops**
Toyota Matrix Matrix XRS (03-08)	82.1 x 85.1 1795	2601	1519 / 1497	17 Alum	215/50	3.17, 2.05, 1.48, 1.17, 0.92, 0.72	4.5	(F) 331 Vented Disc (R) 356 Solid Disc	2905	**Member to request re-classing car, required.**

Class 4:

Class 4	Bore x Stroke (mm) Displacement (cc)	Wheelbase (mm)	Track F & R (mm)	Gear Ratios	Final Drive	Brakes (mm)	Weight (lbs)	Notes:
Chevrolet Sonic (2012)	80.5 x 88.2 1796	99.4	59.4/59.4	3.73, 2.14, 1.41, 1.12, 0.89	3.94	(F)10.8 (R) 9.0 drum	2800	31mm Flat Plate Restrictor.
Fiat 500 (2012)	72.0 x 84.0 1368	90.6	55.4/55.0	3.91, 2.16, 1.35, 0.98, 0.77	3.73	(F) 10.1 x 0.9 (R) 9.4 x 0.4	2280	Fiat suspension kit P5154820, Front main spring P5154821, Front damper assy with top mount P5154822, Rear main spring P5154823, Rear damper assy P5154824, Rear coil spring adapt kit P5154825,

Ford Fiesta (4-dr) (11-12)	79.0 x 81.4 1596	98	57.7/57.7	3.86, 2.04, 1.28, 0.95, 0.74	4.07	(F) 10.2 (R) 7.9 drum	2575	34mm Flat Plate Restrictor. Suspension kit: #M-FR3-FASB
Honda Fit (09-12)	73.0 x 89.55 1499	98.4	58.7/58.1	*3.31, 1.87, 1.30, 0.95, 0.73*	4.62	(F) 10.3 (R) 7.9 drum	2500	34mm Flat Plate Restrictor. Damper and spring set 51600F23SA100, Damper FR LH 51605F23SA100, Damper FR RH 51606F23SA100, Damper RR 52610F23SA100, Spring FR (325) 51401F23SA100, Spring RR (350) 52441F23SA300, Helper spring 52442FC4YA000, Spring spacer 52443FC4YA000, Spring adjust assy RR 52691F23SA010. Seat upper FR spring 51688F23SA200,
Kia Rio 5-door (2012)	77.0 x 85.44 1591	101.2	59.9/60.0	3.76, 2.04, 1.28, 1.03, 0.89, 0.77	3.83	(F) 10.1 x 0.9 (R) 10.3 x 0.4	2600	23mm Flat Plate Restrictor. AKSJ03-10-001 Damper Frt Assembly; KSJ03-10-002 Spring _Eibach 0600.0225.500; KSJ03-10-003 Spring Spacer ; AKSJ03-20-001 Damper-AST-Rear; KSJ03-20-002 Rear Spring Eibach 0600.0250.500; KSJ03-20-003 Rear Upper Spring Perch Delrin; KSJ03-20-004 Rear Spring Spacers-Aluminum; KSJ03-20-005 Rear Spring Spacer Intermediate; AKSJ03-60-001 Sump Pan Extension
Mazda2 (11-12)	78.0 x 83.0 1499	98	58.1/57.7	3.42, 1.84, 1.29, 0.97, 0.78	3.85	(F) 10.1 (R) 8.0 drum	2300	Coil over shock kit (Bilstein) 0000-04-2201-BL, Front springs (ERS) 0000-04-9350-07, Rear springs (ERS) 0000-04-9250-07, Helper springs F&R 0000-04-9926, Spring spacer F&R 0000-04-9925, Front sway bar end links adjustable 0000-04-2202, Rear sway bar 0000-04-2203-RR, Modified strut bearing plate 0000-04-2204, Crash bolt set 0000-04-2205,
MINI Cooper (07-12)	77.0 x 85.8 1598	97.1	57.4/57.8	3.21, 1.79, 1.19, 0.91, 0.78, 0.68	4.35	(F) 11.0 (R) 10.2	2600	33mm Flat Plate Restrictor. L/F Strut-spring assembly 31 31 1 126, R/F Strut-spring assembly 31 31 1 125, Rear Shock-spring assembly 33 50 1 125,
Nissan Versa (07-11)	80.4 x 81.1 1797	102.4	58.3/58.5	3.73, 2.11, 1.45, 1.17, 0.97, 0.81	3.93	(F) 11.02 x 0.95 (R) 9.0 drum	2750	35mm Flat Plate Restrictor.
Nissan Versa (09-11)	78.0 x 83.6 1598	102.4	58.3/58.5	3.73, 2.05, 1.39, 1.03, 0.89	4.07	(F) 10.2 x 0.87 (R) 8.0 drum	2500	
Nissan Versa (2012)	78.0 x 83.6 1598	102.4	58.3/58.5	3.73, 2.05, 1.39, 1.03, .089	4.07	(F) 10.2 x 0.87 (R) 8.0 drum	2490	
Toyota Yaris (07-12)	74.9 x 84.6 1491	96.9	58.3/57.9	3.55, 1.90, 1.31, 0.97, 0.82	3.72	(F) 10.0 (R) 7.9 drum	2420	

CLASS 4	Bore x Stroke (mm) Displacement (cc)	Wheelbase (mm)	Track (F&R) (mm)	Wheel Size (in.)/Mat'l	Tire Size (stock)	Gear Ratios	Final Drive	Brakes (mm)	**Weight (lbs)**	**Notes**
Acura Integra LS/ (3 or 4 door) (95-01)	81.0 x 87.2	2571	1476 / 1471 .	15 x 6 Alum	195/55	3.23, 1.90, 1.36, 1.03, 0.79	4.4	(F) 262 x 21 Vented Disc (R) 239 x 10 Solid Disc	**TBA**	**-Interiors may be removed -Must compete in Showroom Stock configuration**
Ford Focus ZX-3 (00-03)	84.0 x 88.0 1988	2616	1494 / 1486	15 x 5.5 16 x 6 Alum	195/60	3.67, 2.14, 1.45, 1.03, 0.77	3.82	(F) 259 x 23 Vented Disc (R) 203 x 31 Drum	**TBA**	***Engine breather hose may be routed to a catch can; the resultant opening in the air box must be plugged.*** **-Interiors may be removed -Must compete in Showroom Stock configuration**

Honda Civic Coupe (96-00)	75.0 x 90.0 1590	2621	1476 / 1476	14 x 4.5	185/65	3.25, 1.90, 1.25, 0.91, 0.70	4.25	(F) 262 Vented Disc (R) 201 Drum	**2500**	~~**Honda Motorsports performance package (#17D50-S02-C1) permitted. Performance kit includes: Shocks (F): Koni #8042-1001, Shocks (R): Koni #8042-1002, Springs (F): Eibach Kit #9328.140, 350# rate, Springs (R): Eibach Kit #9328.140, 500# rate, Swaybar (R): Neuspeed #H43.22.72, 22mm, Camber: +/- 2º from service manual specs, Wheels: Enkei #ENK13214649SM, 14 x 6".~~ **-Interiors may be removed -Must compete in Showroom Stock configuration**

WHAT DO YOU THINK?

Formula/Sports Racer
FB
1. #7130 (David Gomberg/Stan Clayton) FB engine restrictions
Based on discussions regarding this topic, the FSRAC has reviewed letter #7130 and agreed that the original intent of the FB Class was not an open ended engine output escalation race. It is our opinion that the class would benefit from a cap on horsepower to a maximum of 175. This would thereby generally regulate the cost for new engine development, provide the opportunity for a continued supply of new engines as natural obsolescence occurs, and provide engine durability improvement as this value is lower than even the current standard engines in the class.

After reviewing the information provided which included opinions from within the class and Mr. George Dean (a current engine builder in the class), it is the intention of the FSRAC to seek member input on the following approach.
All engines to be utilized in the class will require the following:

1. A Competitor wishing to run an engine in the class must submit an appropriate, and predetermined, data set to the CRB that adequately demonstrates that the engine does not exceed the 175 hp output limit for a prescribed set of tests (see note below).
2. If the output is higher than 175, the competitor must restrict the engine with the use of thin plate, Flat Plate Intake Restrictors as described within the GCR Appendix F, page 155.
3. These restrictors shall have the same 2-dimensional shape and openings for all four cylinders.
4. The restrictors shall be mounted between the throttle body and the cylinder head, within the rubber mounting sleeve for each of the four cylinders.
5. The competitor will submit a sample set of four restrictors and a true to size 2D drawing with the package for approval.
6. If the engine is below 175hp, no restriction is required.
7. The competitor understands that the CRB will publish the acceptable engine information and restrictor profiles within the GCR if the package is approved.
8. A newly approved engine will not be allowed to run at the Runoffs unless it has been entered and finished at least four National races prior to competing at the Runoffs.
9. The CRB will continue to use competition adjustment if an engine package is shown to have an advantage after approval.

The FSRAC believes that a standardized package of data needs to be identified and provided to competitors considering a new engine such that they clearly understand the requirements before supporting a new development effort. A standardized package would likely include considerations such as; engine dynamometer pulls under strict normalized test conditions, disclosed ignition timing, disclosed configuration (header, intake, etc.), minimum leak-down and compression values of the engine tested, and/or minimum numbers of pulls that are averaged. These are all examples of requirements that may be imposed to assure that the provided test data is valid.

Our Committee seeks Member input on the approach and desired requirements for the standardized test metrics for inclusion of a new engine in the class.

Respectfully,
Members of the Formula & Sports-Racer Rules Advisory Committee

Please send your comments for or against via the form at http://www.crbscca.com or www.clubracingboard.com.

FV

1. #7689 (Stephen Saslow) Minimum Weight Increase

The question has been raised that FV weight should be raised from 1025 to 1050 based on the addition of many safety related item over the past few years, i.e. front roll hoops, arm restraints, head and neck support-type devices, fire bottles, etc. Please send your comments for or against via the form at http://www.crbscca.com or www.clubracingboard.com.

MEMBER ADVISORIES

None.

NOT APPROVED BY THE CRB

GCR

1. #6416 (Dave Kavitski) Add language to clarify and prevent blocking

Thank you for your request. GCR 6.11.1.C is adequate as written. Concerns about blocking can be addressed at any event through the protest process. Please note that the philosophy of this rule is: "Abrupt changes in direction that impede or affect the path of another car attempting to overtake or pass may be interpreted as an effort to deprive a fellow competitor of the right to racing room."

2. #6428 (Darwin Felix) Regional/National designation on cars for Rational events

Thank you for your request for clarity. As this is an organizer's option, please contact your Region about designations. If, at a specific event, you feel there is a concern with respect to a particular competitor's on-track performance, please consult with the event Stewards.

3. #6437 (Darwin Felix) Do not allow Novice Permit holders to participate in Rationals

Thank you for your letter. The CRB has no plans to recommend a change to this rule. This decision is the organizing region's option, so please contact your region about whether or not to include Novice Permit holders.

4. #6438 (Darwin Felix) Stricter Novice Permit to Regional License requirements

Thank you for your letter. Reviewing incident reports indicates no demonstrated need to tighten the requirements, and the CRB has no plans to modify licensing requirements at this time.

5. #6480 (Eric Danielsen) Meaning of the Yellow Flag

Thank you for your concern. The purpose of the GCR definition of either stationary or waving yellow flag is to give the F&C staff on station the widest possible latitude to assess the situation and determine the proper flag condition based on best judgment to ensure the safety of everyone. Every guideline has exceptions and F&C staff should continue to use their best judgment for safety in each situation.

6. #6540 (R J Gordy) Side protrusions

Thank you for your request. Creating a rule that would limit protrusion distances from the sides of cars could cause significant issues for many cars and classes. The CRB, therefore, has no plans to develop such a rule. If a situation arises at an event that appears to be a safety issue, please work a resolution with Tech and the Stewards.

7. #6638 (Peter Watson) Aborted Start

Thank you for your suggestions about rewording and reorganizing GCR 6.5.1.H. The CRB feels the rules are adequate as written, but will review the organization with an eye toward increasing clarity.

8. #6639 (Peter Watson) Car Numbers

Thank you for your letter regarding compliant numbers. The GCR language is adequate as written. Any official in any specialty or any competitor can alert the Stewards or Timing and Scoring to number compliance concerns.

9. #6966 (Hilton Tallman) Proper use of head and neck support-type devices for next year

Thank you for your letter. It is the responsibility of each competitor to ensure proper use of his/her safety equipment based on the manufacturer's guidelines. It is Tech's purview to inspect all safety equipment and its use at any time; however, Tech is not required at annual inspections to determine if, when seated in the racecar, the driver is properly using a head and neck support-type device. The CRB has no plans create such a requirement (rule).

10. #7118 (Peter Jankovskis) Rules For Determining 2012 CenDiv National Champions

The CRB has no plans to make changes to Divisional Champion definitions for 2012. Please express your concerns to your Division's leadership about the number of national races in your division.

11. #7287 (Bill Blust) Runoffs Specification/General participation/car count

Thank you for your letter. The CRB has no plans to recommend Runoffs specifications for cars. Please see letter #7360 (April 2012 Fastrack).

Formula/Sports Racer
FV
1. #7695 (Bruce Livermore) Spec Tire for Formula Vee
Thank you for your effort. Spec tires are not in the philosophy of Formula Vee. The CRB has no plans to specify a spec tire for FV, as current tires are sufficient.

Grand Touring
GT
1. #7649 (Cliff Ebben) Please re-set weight for GT1 to 2010 rule
Thank you for your request. Please see letter #7571.

GT1
1. #7571 (Mitch Poremba) Revert to weight rules before 2010 for GT1
Please see letters below with similar subjects. Member input is not sufficient to justify these requested rules changes.

2. #7600 (Charles Wicht) Reduce the weight of running a SB2 in GT1 by 60lbs
Thank you for your request. Please see letter #7571.

3. #7604 (Mitch Poremba) Rules submitted: see my previous submissions
Thank you for your request. See response to letter #7571. Letters #7572 and #7573 have been removed from consideration per your request.

4. #7608 (Jeff Bailey) Remove 60lb weight from SB2 and canted heads
Thank you for your request. Please see letter #7571.

5. #7609 (Jeff Bailey) GT1 RPM limit
Thank you for your request. The CRB has no plans to limit engine revs in GT.

6. #7610 (DENNIS LAMERS) Increase weight of GT-1 class
Thank you for your request. Please see letter #7571.

7. #7620 (Butch Kummer) Increase Minimum Weights
Thank you for your request. Please see letter #7571.

8. #7621 (Butch Kummer) Drop Splayed Valve Penalty
Thank you for your request. Please see letter #7571.

9. #7632 (Thomas Stanford) Return to 2010 Weight Rules for GT-1
Thank you for your request. Please see letter #7571.

10. #7643 (Ryan McManus) Take off 60# Head Penalty
Thank you for your request. Please see letter #7571.

11. #7646 (Stan Cisar) GT1 Tires
Thank you for your request. Your suggestion of a spec tire for GT1 is not within the GT1 class philosophy.

12. #7658 (David Jans) Set weight of GT-1 back to the 2010 spec
Thank you for your request. Please see letter #7571.

GTL
1. #7492 (Chris Doodson) Rear sway bar install
Thank you for your letter. For safety concerns, all interior mounted suspension components must be covered by a metal panel. The CRB has no plans to change this rule.

Super Touring
STO
1. #7372 (Joel Lipperini) STO Car classification TVR 280i
Please refer to letter #7417 (Technical Bulletin).

2. #7374 (Joel Lipperini) Lotus Elise/Exige
Please refer to letter #7417 (Technical Bulletin).

3. #7375 (Joel Lipperini) Lotus Esprit classification into STO

Please refer to letter #7417 (Technical Bulletin).

STU
1. #7750 (Ian Stewart) Hood Bulge
Thank you for your input. Modification of hoods is not part of the ST class philosophy.

STL
1. #7503 (Greg Amy) Increase the STL RWD Adder
Thank you for your request. The CRB will continue to monitor the performance of RWD STL cars compared to FWD STL cars to determine if weight adjustments need to be made. The CRB does not recommend making weight changes at this time.

2. #7718 (Corey Roun) Rear Wing wagonback/notchback/hatchback
Thank you for your input. The CRB has no plans to change wing height for cars with wagonback/notchback/hatchback style bodies.

Improved Touring
ITR
1. #7178 (Ben Phillips) Porsche 968 ride height
Thank you for your request. The CRB has no plans to change this rule, as it is adequate as written.

ITS
1. #7635 (James Rothenberger) Replacement windshields & glass Porsche 944 cup car
Thank you for your request. Allowing Lexan windshields is not in the philosophy of IT and the CRB has no plans to change this rule. The CRB recommends participation in an SCCA class that does allow Lexan windshields such as ST, or regional classes that may allow Lexan windshields (such as, perhaps, ITE or SPO).

IT
1. #6823 (Rick Henschel) DOT Tire specs.
Thank you for your input. The CRB has no plans to change this rule.

2. #6947 (Jerry Hooten) Dissolve IT classes
Thank you for your input. The CRB has no plans to change the IT rules or philosophies in the directions you are suggesting.

Production
None.

American Sedan
1. #6391 (Joe Aquilante) Restricted prep Mustang.
Thank you for your input. The CRB will continue to monitor this car to determine performance and/or adjustments before making any classification decisions about this car as a Restricted Preparation American Sedan car.

2. #7468 (Wes Sealy) Classify 2nd Gen Trans Am's for A Sedan
Thank you for your request. The CRB does not support older technology cars in American Sedan, due to safety and the speeds that current American Sedan cars achieve. It is recommended that you seek Vintage venues for your racing plans through your local region, or consider running region specific classes where your car might fit (such as ITE or SPO). The SCCA Vintage GCR can be found at: http://scca.cdn.racersites.com/prod/assets/UpdatedVintageGCRRuleBook.pdf

3. #7485 (Wes Sealy) Addendum
Please see letter #7468.

Showroom Stock
SSB
1. #7592 (Mark McCaughey) Approve an alternate available kit
Thank you for your request. There is consideration for this item as part of the package for the 2013 Touring class restructuring ruleset.

B-Spec
1. #7613 (Peter Schwartzott) Removal of catalyst
Thank you for your request. Retaining the catalytic converter is a core philosophy of the B-Spec class.

2. #7683 (Laurence Raines) B Spec Fiat 500 Abarth?
Thank you for your request. Only normally aspirated cars are considered for B-Spec. You may race the standard model.

Spec Miata
None.

Touring
T1
1. #7385 (Bob Kelley) Allow LS-3 engine
Thank you for your request. There is consideration for this item as part of the package for the 2013 Touring class restructuring ruleset.

T2
1. #7010 (Lance Stewart) Allow Miller Mustang in T-2
Thank you for your request. The Miller Mustang does not fit the class philosophy of Touring.

2. #7518 (Matt Samojedny) Add H&R Springs to E92 M3
Thank you for your request. There is consideration for these items as part of the package for the 2013 Touring class restructuring ruleset.

T3
1. #7628 (Tim Myers) Increase tire size to +20mm and reduce weight
Thank you for your letter. The performance potential of the T3 Mustang has not been shown. The CRB will monitor the performance of the car to determine if adjustments are required.

2. #7668 (Brett Mars) Reduce the weight of the 2011 Mustang in T3
Thank you for your request. Please see letter #7628.

3. #7688 (Tim Myers) Positive adjustments for T3 V6 Mustang
Thank you for your request. Please see letter #7628.

PREVIOUSLY ADDRESSED
None.

NO ACTION REQUIRED
GCR
1. #6417 (Dave Kavitski) Prepare rules that don't force competitors to cheat
Thank you for your letter. If there are specific rules you feel encourage non-compliance, please submit them to the CRB for their consideration.

2. #6432 (Stephen Hyatt) Who controls policy/proc for specialty manuals?
The CRB reviews and approves national specialty manuals, but these can be supplemented and adapted to reflect local practices. Please consult with your Executive Steward about your concern.

3. #6589 (Brian McCarthy) Establish restricted national classes at rationals
Thank you for your input. Please review GCR 3.1.4 which describes restricted nationals. The San Francisco Region is operating within the GCR rules if it conducts such an event.

4. #6593 (Quinn Posner) Rationals and San Francisco Region - do not restrict classes
Thank you for your input. Please see letter #6589.

5. #6594 (Stephen Saslow) Do Not Restrict Classes in Rationals
Thank you for your input. Please see letter #6589.

6. #6597 (Bob Posner) SF Region rationals - Do not limit classes
Thank you for your input. Please see letter #6589.

7. #6762 (Darwin Felix) 10 Divisional Bonus Points to help struggling regions/events
Thank you for your suggestion. The CRB has no plans to suggest National Points structure changes to the Board of Directors.

8. #7039 (Larry Savage) Class reorganization
Thank you for your compliments. The CRB will continue to have the best interests of drivers in mind in all aspects under the CRB's purview.

9. #7047 (Barry Wills) The new 24 class proposal

Thank you for your input.

10. #7072 (Jason Berkeley) Class Restructuring Concepts
Thank you for your letter. Please see letter #7039.

11. #7104 (Eric Heinrich) SFI 38.1 recertification
Thank you for your support.

12. #7110 (Peter Jankovskis) Decreasing Runoffs Attendance /Decline in CenDiv Nationals
Thank you for your letter. The CRB has no purview in the scheduling of nationals within your Division. The CRB suggests you express your concerns to your Divisional leadership.

13. #7120 (Peter Zekert) Request GTL Runoffs race on Friday 21 SEP 2012
Thank you for your request. The 2012 Runoffs schedule has been developed by the SCCA staff in Topeka and approved by the Board of Directors. There are no plans to change the schedule.

14. #7148 (Larry Savage) Congrats - Majors program
Thank you for your enthusiastic support of the Majors Program!

15. #7200 (Earl Hurlbut) Delete GCR section Appendix B, paragraph 1.2.H.1
Thank you for your letter. Your request is being referred to the Board of Directors in light of the new national racing initiatives.

Formula/Sports Racer
F5
1. #7189 (Thomas Manalio) The Challenge F5/F6
Thank you for offering your equipment for such an interesting comparison.

FV
1. #7692 (Bruce Livermore) Increase Minimum Weight to 1050
Please see letter #7689 under WDYT.

Grand Touring
GT1
1. #7611 (Ryan McManus) Leave weights for class as is
Thank you for your request. Please see letter #7571.

2. #7612 (Roger McManus) Leave GT1 weights as they are currently
Thank you for your request. Please see letter #7571.

3. #7629 (Charles Wicht) GT1 Weight
Thank you for your request. Please see letter #7571.

4. #7645 (Stan Cisar) GT1 weight
Thank you for your request. Please see letter #7571.

5. #7652 (Bob Ruman) GT1 weights
Thank you for your request. Please see letter #7571.

6. #7653 (Bob Ruman) Spec tires/bias tires
Thank you for your input. Please see letter #7646.

7. #7665 (Amy Ruman) Don’t change GT-1 weight rules
Thank you for your request. Please see letter #7571.

Super Touring
STO
1. #7675 (Alex Reznikov) Tube frame cars in STO
Thank you for your request and your interest in SCCA. Your car may be eligible in regional SPO classes and national or regional GT classes, but tube frame cars are not eligible to compete in Super Touring.

ST
1. #7677 (Dale Shoemaker) Clarification of new STL weight for 1.8 liter Miata
Thank you for your question. Yes, the 2.5% penalty for rear wheel drive still does apply.

2. #7682 (Scott Bartlett) Allow reasonable modification to chassis for safety equipment
Thank you for your request. Please see the response to letter #7678 (Technical Bulletin). Please also note that SM or IT cars running in ST must follow their respective class rules.

STL
1. #7638 (Rod Dykhouse) Which weight is correct?
Thank you for your input. This has been taken care of. The CRB will continue to monitor and make weight adjustments as needed.

Improved Touring
None.

Production
1. #7424 (Kevin Ruck) Review new grill/radiator-opening screen rule
Thank you for your concern. Please see adopted rule modification in letter #7663, April 2012 Fastrack, Technical Bulletin.

2. #7451 (Eric Prill) Radiator Screen Input
Thank you for your concern. Please see adopted rule modification in letter #7663, April 2012 Fastrack, Technical Bulletin.

3. #7534 (Andrew Chartrand) HP or FP for my 1.2L Corolla
Thank you for your request. If the HP Toyota Corolla that is classed with the 1.6 liter engine also was offered with a 1.2 liter engine, the 1.2 liter engine can be replaced with the 1.6 liter engine to make the car eligible for HP. The CRB has no plans to classify the 1.2 liter engine at this time.

4. #7670 (Evan Webb) Support for Prod FI changes
This request is a recommended rule change for 2013 (to be presented at the next Board of Directors meeting). Please see letter #7154 in the April 2012 Fastrack Minutes.

EP
1. #7435 (Donald Walsh) Rule re: radiator screens
Thank you for your concern. Please see adopted rule modification in letter #7663, April 2012 Fastrack, Technical Bulletin.

FP
1. #7671 (Gordon Jones) Fuel Injection
This request is a recommended rule change for 2013 (to be presented at the next Board of Directors meeting). Please see letter #7154 in the April 2012 Fastrack Minutes.

HP
1. #7714 (Bob Hess) TB-04, 3/20/2012, Item 7663, Taping Oil Coolers/ Radiators
Thank you for your concern. Please see adopted rule modification in letter #7663, April 2012 Fastrack, Technical Bulletin.

American Sedan
None.

Showroom Stock
B-Spec
1. #7702 (vanderPutten Garrett) B-Spec Support for Chevy Sonic
Thank you for your support and offer of assistance.

Spec Miata
None.

Touring/Showroom Stock
T2
1. #6974 (Michael Greuter) Wing height clarification Porsche
Thank you for your input. The 3.8 RSR wing is a Porsche product. The spec line for this car states: “Rear wings may be no higher, relative to the roofline, than a factory, non-extended, 3.8 RSR wing.” The CRB recommends contacting Porsche for non-extended height of this wing and then contacting Getty to determine if your wing is compliant or not.

2. #7309 (Michael Sullivan) Brakes and Bars for T-2 S-2000
Thank you for your request. There is consideration for these items as part of the package for the 2013 Touring class restructuring

ruleset.

RESUMES

1. #6860 (Jacek Mucha) Application for F/SR Committee
Thank you for submitting your resume, the FSRAC is currently sufficiently staffed and your resume will be kept on file for consideration as additional and new members are required.

2. #6929 (Dennis Joyce) Response - Background of Candidate for GCR Committee
Dennis Joyce has been added to the GCR Committee.

CLUB RACING TECHNICAL BULLETIN

DATE: April 20, 2012
NUMBER: TB 12-05
FROM: Club Racing Board
TO: Competitors, Stewards, and Scrutineers
SUBJECT: Errors and Omissions, Competition Adjustments, Clarifications, and Classifications

All changes are effective 5/1/2012 unless otherwise noted.

GCR

1. #7749 (SCCA Staff) Clarify seat belt mounting language.
In GCR section 9.3.19.F, correct the following section to allow seatbelt manufacturer provided mounting hardware as follows:

"Each seat (lap) and shoulder belt of the harness (5, 6, or 7 points) shall have an individual mounting point (i.e. 2 for seat belt and 2 for shoulder belt minimum). 6 or 7 point system anti-submarine straps may share a mounting point with one or both seat (lap) belt(s). The minimum acceptable bolts used in the mounting of all belts and harnesses is SAE Grade 5. *Mounting hardware, including eye bolts, as provided by the belt manufacturer, may also be used for mounting belts and harnesses.* Where possible, seat belt, shoulder harness, and anti-submarine strap(s) should be mounted to the roll structure or frame of the car. Where this is not possible, large diameter mounting washers or equivalent should be used to spread the load. Bolting through aluminum floor panels, etc., is not acceptable. Holes in the roll cage to accommodate the installation of the harness must be bushed and welded completely."

2. #7753 (SCCA Staff) Proposal to allow MSA formula Roll Over Protection homologations
Add 9.4.5.E.10 as follows:
"*Single seat cars may compete with an approved MSA (Motor Sports Association UK) National Single Seater Roll Structure Certificate. All related engineering drawings and documents shall be submitted to SCCA Technical Services with the homologation request.*"

Formula/Sports Racer

None.

Grand Touring

None.

Improved Touring

ITR

1. #6637 (Andy Bettencourt) 1984 C4 Corvette Classification
In ITR, classify the 1984 Chevrolet Corvette C4 as follows:

ITR	Engine Type	Bore x Stroke(mm)/ Displ. (cc)	Valves IN & EX (mm)	Comp. Ratio	Wheel-base (inch)	Wheel Dia. (inch)	Gear Ratios	Brakes Std. (mm)	Weight (lbs)	Notes:
Chevrolet Corvette (1984)	*V8 OHV*	*101.6 x 88.4 5700*	*(I) 49.28 (E) 38.1*	*9:01*	*96.2*	*17*	*2.88, 1.91, 1.33, 1.00*	*(F) 292.1 Disc (R) 292.1 Disc*	*3200*	

Production

EP

1. #7586 (Erik Strelnieks) 2.7 liter engine option
In EP, classify the 2000-2004 Porsche Boxster as follows:

EP	Prep. Level	Weight (lbs.)	Engine Type	Bore x Sroke mm.(in.)	Displ. cc./ (ci)	Block Mat'l	Head/PN & Mat'l	Valves IN & EX mm/(in.)	Carb. No. & Type	Wheelbase mm/(in.)	Track (F/R) mm/(in.)
Porsche Boxter(2000-2004)	*2*	*2850 * 2921 ** 2993*	*6 Cyl.. DOHC*	*85.5x78 (3.37x3.07)*	*2,687(163.9)*	*Alum*	*Alum*	*33.3(I) 28.1(E)*	*Fuel injection*	*2415 (95.1)*	*1560.1/1614.9(61.4/63.6)*

EP	Wheels (max)	Trans. Speeds	Brakes Std. (mm/(in.))	Brakes Alt.: mm/(in.)	Notes:
Porsche Boxter (2000-2004)	*17x8.5*	*5*	*(F) 298(11.7) vented (R) 290(11.4) vented*		*Comp. Ratio limited to 12.0:1, Valve lift limited to .500".*

2. #7720 (Joe Boruch) Alternate Differential Housing Honda S2000
In EP, Honda S2000 (00-03), add to the notes as follows: "*Honda S2000 2004-2009 differential housing is permitted.*"

Super Touring
STO
1. #7827 (SCCA Staff) Allow the Solstice to compete with alternate hardtop.
In STO, Pontiac Solstice, add to the chassis specific notes as follows: "*For Pontiac Solstice: May use hardtop GM PCS-0664 or equivalent aftermarket. May compete with stock fuel tank.*"

STU
1. #7678 (ST Committee) Miata Tunnel Modification
In STU, add to table A as follows:
Model: *Mazda Miata*
Max disp. *All*
Weight: *chart*
Notes: "*The transmission tunnel may be modified for the purpose of installing a competition driver seat. The floor pan must remain in its original position.*"

2. #7680 (ST Committee) Increase FWD Subractor in STU
In section 9.1.4.2.I.4, change the FWD subtractor as follows: "Front wheel drive cars may reduce their minimum weight by *5%* ~~lbs~~. Front wheel drive cars with a strut type front suspension may reduce their minimum weight by an additional 2.5% ~~lbs~~."

3. #7709 (David Heinz) 13B Bridgeport Fuel Injection
Clarify the last sentence of section 9.1.4.2.I.1 as follows: "The Mazda 13b bridge port engine is allowed with stock ~~fuel injection~~ *intake manifold & throttle body,* or automotive 2 barrel carb with 44 mm chokes at 2600 lbs."

ST
1. #7417 (Eric Heinrich) Clarify definition of chassis/engine manufacturer being the same.
Clarify section 9.1.4.G.1 as follows: "Alternate engines may be used, if the manufacturer of the vehicle and engine are the same (e.g., an Acura engine installed into a Honda car) and was available in a car delivered in North America. "Vehicles delivered with engines from other manufacturers (e.g. Morgan, Panoz, etc) may only use the originally installed engine, or another engine manufactured by the chassis manufacturer (e.g. Lotus Elise may use the Toyota ZZ engine, or any other Lotus manufactured engine that complies with the class rules, however a Lotus Esprit may not install a Toyota ZZ engine)"

STL
1. #7656 (Mark Connolly) Mini Cooper S in STL
Clarify section 9.1.4.3.D.1 as follows: "~~Turbocharged engines~~ Forced induction ~~are~~ is not permitted in STL."

2. #7679 (ST Committee) Pontiac Solstice and Saturn Sky
Create a spec line table in STL section 9.1.4.1.3.J. Add the Pontiac Solstic/Saturn Sky as follows:
Model: *Pontiac Solstice/Saturn Sky*
Weight: *NA*
Maximum Displacement: *All*
Notes: "*May use hardtop GM PCS-0664 or equivalent aftermarket. May compete with stock fuel tank.*"

American Sedan
None.

Spec Miata

1. #7405 (Jim Drago) Allow flat washers under the say bar shackles.

Clarify section 9.1.8.C.4.d, by adding the following language: "*Metal shims of up to 1/8" total thickness may be added between each anti-roll bar mount shackle and its stock mounting point on the chassis.*"

Touring/Showroom Stock

T2

1. #7295 (Jeffery Kettman) VTS Submission Part 3 (2012 Camaro)

In T2, Chevrolet Camaro SS (10-11), add the 1LE suspension package, and update the spec line as follows:

T2	Bore x Stroke (mm)/ Displ. (cc)	Wheel-base (mm)	Max Wheel Size (inch)	Tire Size	Gear Ratios	Final Drive	Brakes (mm)	Weight (lbs)	Notes:
Chevrolet Camaro *1LE,* SS (10-*13*)	103.3 x 92.0 6162	2853	20 X 10 (F & R)	295/35 (F & R)	3.01, 2.07, 1.43, 1.00, 0.84, 0.57	3.45 *or 3.91*	(F) 355 x 32 Vented (R) 365 x 28 Vented	*3700*	*1LE-SS Track Pack permitted, Tower Brace 22756880, oil-air separator 12653074, 57 mm flat plate restrictor required.*

T3

1. #7821 (Club Racing Board) 350Z

In T3, Nissan 350Z Track/Touring/Standard/Nismo (03-08), change the notes as follows: "Base model and "Rev Up" engines: ~~52mm~~ *58mm* restrictor required."

CLUB RACING COURT OF APPEALS

JUDGEMENT OF THE COURT OF APPEALS
Brad Drew vs. SOM COA Ref. No. 12-01-SP
March 21, 2012

FACTS IN BRIEF

Following the Group 5 race at Willow Springs on February 25, 2012, FM alternators were visually inspected by Tech for compliance with GCR 9.1.1.F.5.A., but not removed or tested. A Technical Inspection Report was prepared stating that Brad Drew, FM #78, used an incorrect (non-compliant) alternator during the national race. Based on the report, Assistant Chief Steward John Snow filed a Chief Steward's Action (CSA) disqualifying Mr. Drew. Mr. Drew did not agree with the ruling and protested the decision. The Stewards of the Meeting (SOM), Jack Brabban, Tom VanCamp, Ed Hollman, and Irene Wells, Chairman, conducted a hearing, reviewed the evidence, and heard witnesses. The SOM determined that Mr. Drew's alternator was non-compliant and disallowed his protest. The SOM chose not to add any penalty points to Mr. Drew's competition license.

Mr. Drew appealed the decision of the SOM.

DATES OF THE COURT

The SCCA Court of Appeals (COA) Jack Marr, Tom Hoffman, and Michael West, Chairman, met on March 14 and March 21, 2012, to review, hear and render a decision on the appeal.

DOCUMENTS AND OTHER EVIDENCE RECEIVED AND REVIEWED

1. Appeal letter and witness statements from Brad Drew, received March 9, 2012.
2. Official Observers Report and related documents, received March 18, 2012.
3. Official Race Results, received March 20, 2012.
4. Email from Barb Knox, Chief Steward (CS), received March 21, 2012.
5, Email from Jim Wheeler, Chairman, SCCA Club Racing Board.

FINDINGS

In his appeal Mr. Drew states the SOM advised that he was a test case to prompt an update and correction to the FM alternator rule. The event officials felt the most expedient way to accomplish this GCR update was via an "errors and omissions" ruling from the Court of Appeals. The CS confirmed that Mr. Drew's assertion is correct.

The COA also learned:

- The label affixed to the alternator was unreadable and that was the basis for declaring the alternator non-compliant.
- The alternator was not removed and/or tested to determine if it was operating according to the specifications in GCR 9.1.1.F.5.A.
- The SOM did not preserve the evidence (alternator) per GCR 8.3.3.F.
- Mr. Drew raced the following day, was credited with a third place finish and awarded championship points. Although the COA asked, the event officials did not provide information on whether he used the same or a different alternator in the Sunday race.
- Two other FM competitors were also disqualified via CSA for a non-compliant alternator. One competitor protested and his protest was disallowed. The third competitor did not protest and the COA notes there were additional compliance issues with that car.

Moses Smith, FM constructor, submitted testimony that, due to supply problems, he is actively reviewing specifications for an equivalent alternator and will submit a rules update request to the Club Racing Board (CRB) in the future. However, the CRB confirmed neither he nor any FM competitor has submitted a request to change the rule.

"Errors and omissions" decisions have historically corrected rules/sections in the GCR that were inaccurate due to oversight, typographical/printing errors, or similar problems. This issue, possible lack of availability of the specified alternator, does not fall within that context. An "errors and omissions" ruling is not supported by the facts.

DECISION

The Court of Appeals overturns the decision of the SOM in its entirety for failure to fully follow 2012 GCR 5.12.2.C.5. (Powers of the Chief Steward); and GCR 8.3.3.F. (Preserving Evidence). Mr. Drew's finishing position will be restored and all points awarded. Mr. Drew's appeal is deemed well founded and his entire appeal fee will be returned.

In addition, the COA suggests the CS and SOM review the actions taken against FM drivers Steve Brown, #31, and Edward Lever, #53. The COA further requests the CS and/or SOM report the results of these reviews to the COA upon completion and take other actions that may be appropriate if the penalties against those drivers are modified or rescinded.

CLUB RACING COURT OF APPEALS

JUDGEMENT OF THE COURT OF APPEALS
Barbara McClellan vs. SOM COA Ref. No. 12-02-NP
March 28, 2012

FACTS IN BRIEF

On March 11, 2012, FE #22 driven by Jerry Kroll was late to the grid for the start of race 12 at the Double National at Thunder Hill. A two group split start was planned with FE in the first group. A pace car was to lead the second group.

The field had moved into pit lane and was stationary when Mr. Kroll arrived. A grid worker waved Mr. Kroll into pit lane where Mr. Kroll passed the second group and pace car, and took position at the rear of the first group. Mr. Kroll did not attempt to move into his second row qualifying position. The field was then dispatched on the pace lap and the race started.

A Request for Action (RFA) was generated by Assistant Chief Steward (ACS) Gary Pitts alleging Mr. Kroll was in violation of 2012 GCR 6.4.2.F. (Cars not on the grid) and 6.5.1.J.1. (May not regain position). The Stewards of the Meeting (SOM), Dick Raymond, Clint de Witt and Jim Graffy, Chairman met, interviewed Mr. Kroll and Grid Marshal Karen Lamm. The SOM determined no violations had occurred as Mr. Kroll believed he had been waved past the second group and the Pace Car by the Grid Marshall.

Chief Steward Barbara McClellan appealed the SOM decision. In her appeal she alleges additional violations of 2012 GCR 6.1.1.B (Yellow Flag) and 6.5.1.E. (Pace Car) by Mr. Kroll and also expressed concerns with what defines the “rear of the field”.

DATES OF THE COURT

The SCCA Court of Appeals (COA) Tom Hoffman, Jack Marr, and Michael West, Chairman, met on March 28, 2012, to review, hear and render a decision on the appeal.

DOCUMENTS AND OTHER EVIDENCE RECEIVED AND REVIEWED

1. Appeal letter from Barbara McClellan with witness statements, not seen by the SOM received March 19, 2012.
2. Official Observers Report and related documents, received March 20, 2012.
3. E-mail statement from Jerry Kroll, received March 24, 2012.
4. E-mail from Gary Meeker (ACS), received March 21, 2012.
5. E-mail from Jim Graffy (Acting CSOM), received March 24, 2012.

FINDINGS

The Court of Appeals (COA) finds that the wave onto pit lane by the Grid Marshall could easily have been interpreted by Mr. Kroll as both a directive and permission to move past the second group of cars as well as the pace car into the last position in the first group. The COA also finds that the cars were stationary in the pit lane at the time this occurred, still in the process of forming the grid, and had not started the pace lap.

Ms. McClellan’s argument that Mr. Kroll should be penalized for “passing under a yellow flag condition” and “passing the pace car” should have been directed to the SOM at the event. As the COA may not act as a First Court (SOM) per 2012 GCR 8.4.5.C., the COA has no authority to address these issues.

Ms. McClellan’s request that the COA provide a definitive ruling on what constitutes the “rear of the field” would be better addressed by the Club Racing Board (CRB). The COA notes the actions in this case were reasonable based on the circumstances.

DECISION

The Court of Appeals upholds the decision of the SOM in its entirety. Ms. McClellan’s appeal is disallowed.

Ms. McClellan’s allegations of violation by Mr. Kroll of 2012 GCR 6.1.1.B. and 6.5.1.E. will not be addressed by the COA in accordance with 2012 GCR 8.4.5.C.

Ms. McClellan’s appeal is deemed well founded and her entire appeal fee will be returned.

CLUB RACING COURT OF APPEALS

COURT OF APPEALS
COA Ref. No. 12-03-SP
March 28, 2012

Following the Group 5 race at Willow Springs on February 25, 2012, the Chief Steward disqualified Steve Brown, FM #31, for using a non-compliant alternator. Mr. Brown's protest of the Chief Steward's disqualification was disallowed by the Stewards of the Meeting (SOM). Mr. Brown did not agree with the SOM ruling and petitioned the Court of Appeals for relief.

The SCCA Court of Appeals (COA) Jack Marr, Tom Hoffman, and Michael West, Chairman, met on March 28, 2012, to review Mr. Brown's petition. The COA determined the appeal petition was received on March 19, 2012, which was beyond the 10-day filing period stipulated in 2012 GCR 8.4.3.A.3. Additionally, the COA established he did not include the applicable filing fee with his petition nor provide means for assessing the fee in accordance with 2012 GCR 8.4.3.A.4.

Because Mr. Brown's appeal was not filed timely, the COA respectfully declines to hear it. Mr. Brown's petition is returned unheard.

COA Note:

The COA just issued COA 12-01-SP in which the facts and actions were identical in content to Mr. Brown's case. In COA 12-01-SP the COA overturned the SOM ruling and restored the driver's finishing position and points. Because this appeal was not filed correctly, the COA cannot grant Mr. Brown the same relief or return it for review. However, in COA 12-01-SP the COA suggested the Chief Steward and Stewards of the Meeting review the action taken against Mr. Brown and provide their determination to the COA.

CLUB RACING COURT OF APPEALS

JUDGEMENT OF THE COURT OF APPEALS
Jacek Mucha vs. SOM COA Ref. No. 12-04-SE
April 11, 2012

FACTS IN BRIEF

On the last lap of the Group 3 race at the Road Atlanta Double National/ECR/Pro-IT event on March 18, 2012, CSR #07 (driven by Jacek Mucha) and CSR #8 (driven by Jean-Luc Liverato) made contact after exiting Turn 10B and before the Turn 11 Flag Station.

The driver of CSR #8, Jean-Luc Liverato, protested the driver of CSR #07, Jacek Mucha, asserting a violation of 2012 GCR 6.11.1.A., B., C., and D. (Rules of the Road). Concurrently, Assistant Chief Steward (ACS), Robert Hudson, filed a Request for Action (RFA) with the Stewards of the Meeting (SOM), seeking an investigation of the contact between Mr. Liverato and Mr. Mucha, also, citing 6.11.A. and 6.11.B. The SOM combined Mr. Liverato's protest and the RFA into one action (9 and 9A in the Observers Report).

The SOM, Geoff Churchill, Sue Roethel, Dave Rollow, Nick Voigt and Robert (Bob) Horansky (Chairman) reviewed observations, and heard testimony from both drivers, a witness (spectator) and the ACS. The SOM upheld Mr. Liverato's protest based upon the "preponderance of Witness Statements" indicating Mr. Mucha "pinched" Mr. Liverato coming out of Turn 10B. Mr. Mucha was penalized one finishing position in class and assessed two (2) penalty points.

Mr. Mucha appealed the decision of the SOM.

DATES OF THE COURT

The SCCA Court of Appeals (COA) Jack Marr, Jeffrey Niess, and Michael West, Chairman, met on April 4 and April 11, 2012, to review, hear and render a decision on the appeal.

DOCUMENTS AND OTHER EVIDENCE RECEIVED AND REVIEWED

1. Mr. Mucha's Letter of Appeal with Witness Statements from Charles Pennault (crew), Mirl Swan (crew), Jim Griffith (crew) and Jim Downing (not present at the event), received March 27, 2012.
2. The Official Observers Report and related documents, received March 30, 2012.
3. Video evidence (post race walk-around of both cars) received March 30, 2012.

4. Email from Bob Horansky (Chair SOM), received April 2, 2012.

FINDINGS

According to the SOM's Summary of Action, this was a closely contested race with the lead changing at least twice during the race. As both cars entered Turn 10A on the final lap, with Mr. Mucha leading on driver's left, Mr. Liverato reportedly braked later and carried more speed out of 10A He then crossed behind Mr. Mucha, right-to-left between 10A and 10B, and raced to Turn 11 on driver's left of Mr. Mucha. As both cars raced towards Turn 11, Mr. Mucha moved to driver's left and made contact (left rear of Mr. Mucha into right front of Mr. Liverato), causing Mr. Liverato to spin. Mr. Mucha won the race and Mr. Liverato rejoined the race and finished 2nd.

In his testimony to the SOM and again in his appeal, Mr. Mucha reiterated that he did not know Mr. Liverato was on his left until the cars made contact. Mr. Mucha emphasized that, in accordance with GCR 6.11.1., he gave racing room on driver's right in Turn 10B assuming that Mr. Liverato would attempt to pass on that side. Mr. Mucha further states that the right side is the "expected passing line exiting turn 10B."

Nothing in the new evidence submitted with the appeal suggests that Mr. Liverato had not rightfully gained position to the left of Mr. Mucha as they raced toward Turn 11. As such, the COA does not agree with Mr. Mucha's implied assertion that passing on the right side exiting Turn 10B at Road Atlanta is the only "expected racing line." In addition, documents attached to Mr. Mucha's appeal do not contain details or arguments that would cause the COA to disregard the evidence relied upon by the SOM in arriving at their ruling or question their decision.

DECISION

The Court of Appeals upholds the decision of the SOM in its entirety. Mr. Mucha's appeal is deemed well founded and his appeal fee, less the amount retained by SCCA, will be returned.

SOLO EVENTS BOARD

SOLO EVENTS BOARD | March 28, 2012

The Solo Events Board met by conference call March 28th. Attending were SEB members Dave Feighner, Bryan Nemy, Steve Hudson, Mike Simanyi, Erik Strelnieks, Richard Holden, and Dave Hardy; John Walsh and Jerry Wannarka of the BOD; Doug Gill, Ryan Miles, and Brian Harmer of the National Staff. These minutes are presented in topical order rather than the order discussed.

Unless noted otherwise the effective date for all rule, class, and listing change proposals herein is 1/1/*2013*

Comments regarding items published herein should be directed via the website www.sebscca.com.

GENERAL

- The SEB has recommended Al Hermans to the BOD for the position of Midwest Division Solo Events Steward (#7766).
- The following proposal to change the passenger rule is being published here for member comment (#7716):
  - Change the second sentence of 4.1.A to read as follows:

    "Any underage driver who has the legal authority (license or permit) to operate an automobile with restrictions on a public road may compete at Solo events, as long as the restrictions of the driving license or permit are met, and the event allows a passenger."

  - Also add to the end of 4.1.A:

    "*The provisions of 4.1.D provide event officials discretion with regard to the entry of any driver.*"

- The following set of rule change proposals is being published here for member review and comment (#7707):
  - Change the first three sentences of 8.4 to read as follows:

    "The protest *should* be decided on the day of the event by a PC of at least three members, within a reasonable time following completion of the event. If the protest cannot be decided on the day of the event, the PC must resolve it within *10 calendar days unless agreed to by the parties*. The delayed protest decision will be *forwarded to* both parties of the protest in *a mutually agreed upon method of either email or certified mail*. "

  - Also change the second sentence of 8.4.1 to read as follows:

    "Members of the PC may also be drivers in the same event, but *at the National Championship* will not perform any other duties than those of the PC."

STOCK

- The SEB is seeking member input on the possibility of changing the minimum treadwear rating for the Road Tire (RT) Supplemental classes to *200*.
- The SAC and SEB have reviewed the following items, and thank these members for their input:
  - # 7108, tire pressure monitoring sensors. This issue was addressed in the April Fastrack by Stock Tech Bulletin #1.
  - #7511, showroom stock rules. The SAC has indicated that it will consider all options when developing the philosophy for the Stock category going forward.
  - #7545, road tire comments. The SEB and SAC are not anticipating making changes to the RT classes for 2012, but changes are under consideration for 2013.

STREET TOURING

- The SEB is seeking member input on the possibility of changing the minimum tire treadwear rating for ST to *200*.
- The following rule change proposals are submitted for member review and comment:
  - Modify 14.10.E as follows (#7225):

    1) Remove the words "high flow" from the first sentence.

    2) Add new sentence: "***Replacement converters must have a minimum catalyst density of 100 cells per inch and minimum substrate length of 3***".

    Note: this more clearly defines what a catalytic converter is and a minimum level of functionality. It should have no effect on existing installations of legitimate automotive converters.

  - Replace 14.10.A with the following (#7236):

"***Oil pans and pickups may be modified or substituted. Addition or modification of windage trays or crankshaft scrapers is not allowed.***"

Note: Based on member feedback, this expands on the previously published proposal allowing oil pickup relocation within the OE pan. It is intended to allow common bolt-on solutions to oil starvation issues caused by high cornering loads, while minimizing potential performance enhancements.

- The STAC and SEB have reviewed the following items, and thank these members for their input:
  - #7589 and #7674, Kia Rio 5. This car was classed in the April Fastrack under ST Tech Bulletin #7.

STREET PREPARED

- The SPAC and SEB have reviewed the following items, and thank these members for their input:
  - #5467, E46 BMW classing, and #6694, RX8 classing. As noted in the April Fastrack, the SPAC feels that more information and experience with the new structure are necessary before considering further specific reclassifications.

STREET MODIFIED

- The following rule change proposal is published here for member review and comment (#7575):
  - Remove 16.3. Note: this section was provided when the SM category was first created, and is no longer viewed as specifically necessary since the category and its rules have matured.

PREPARED

- The following previously-published proposal regarding 10" wheels in G Prepared has been withdrawn, per recommendation of the PAC (#7208, 7212, 7218, 7238, 7240, 7249, 7251, 7443, 7453, 7463, 7464)
- The PAC and SEB have reviewed the following items, and thank this member for the input:
  - #7150, bulkhead use

MODIFIED

- The MAC and SEB have reviewed the following items, and thank these members for their input:
  - #6190 and# 6408, forced induction. The MAC is working on a specific proposal regarding this subject.

NOT RECOMMENDED

<u>Stock</u>

- #6732, Fiat Abarth classing. At this time there is not sufficient information to overcome concerns about this model with regard to the provisions of Section 3.1, regarding rollover risk. The Abarth does not have a published SSF or rollover rating, and its average track is less than its overall height.
- #7234 and #7237, Chevy Sonic classing. The SAC remains concerned about the rollover potential for this model given that its average track is less than its overall height.
- #7577, shock absorber allowances. Per the SAC, the current allowances of Section 13.5 regarding shock absorber replacement are in alignment with the current needs and philosophy of the Stock category.

<u>Street Touring</u>

- #7141, Accusump. The STAC does not feel this modification is consistent with class philosophy. An alternate solution is available via the proposal for item #7236 elsewhere herein.
- #7404 and 7418, limited-slip diffs and machining. Per the STAC, such custom machining is not in the spirit of ST.
- #7494, Toyo R1R. This subject was responded to in the April Fastrack under item #7203.
- #7507, motor mounts/torque suppression device. The STAC believes the current motor mount allowance is sufficient.
- #7515 and #7520, oil pickup. See the above proposal regarding item #7236.
- #7564, sensor allowances. The STAC believes this would not be consistent with category philosophy.
- #7579, limited-slip differential allowance. The member was assisted in finding the parts required to address the issue within the rules.

<u>Prepared</u>

- #7246, 7336, open car wings. The PAC does not believe open cars without windshields should receive additional allowances.
- #7444, Production cars with Solo weights. The PAC feels this is counter to their current approach regarding Section 17.11, and does not help keep the Solo rules separate from the GCR.

Modified

- #6693, engine position. The MAC is concerned about the potential detrimental effects a change of this magnitude could have on the stability of the production-based Modified classes. The committee recommends that the competitor request his Regional program to permit the car to run in EM, since 18.1 is not among the mandatory provisions shown in 1.1.

TECH BULLETINS

General

1. The SEB has determined that the BFGoodrich R1S meets the requirements of Section 13.3 and is thus eligible for use in the applicable categories.

2. Clarify 3.6.A to read as follows (#7751):

   "Stock and Street Touring category vehicles will use *fuel which is Federally approved for use on public highways*. "

   In conjunction, change the fourth sentence of 3.6.B to read as follows:

   "Oxygen and/or nitrogen bearing additives are prohibited except for those originally present in *fuel which is Federally approved for use on public highways.*"

Stock

3. Per the SAC, the allowances contained in 13.7.a only permit substitution/removal of bushing material related to the chosen sway bar being substituted or removed. (#7605)

4. Per the SAC, the following new listing is added in Appendix A, effective immediately upon publication:

Ford Crown Victoria (all)	FS (#7662)

5. Per the SAC, regarding the 2007-08 Ford Mustang Shelby GT, documentation provided Shelby American does not meet the requirements for factory authorized methods and procedures of repair as outlined in section 13.1. Required documentation in this case would have to come from Ford. (#7669)

Street Touring

6. The following new listing, effective immediately upon publication, has been provided by the STAC:

Fiat 500 (2012)	STF (#7568)

Street Modified

7. Per the SMAC, SM rule 16.1.L clearly states the vehicle width limitation... "Wings, and any component thereof, may not extend beyond the vehicle width, as defined by the outermost portion of the vehicle doors, less mirrors, door handles, rub strips, and trim." (#7420)

8. Per the SMAC, alternate subframes may only use OE subframe-to-chassis mounting points. (#7450)

Prepared

9. The following new listings, effective immediately upon publication, have been approved for addition to Appendix A:

Chevrolet Sonic (non-turbo, 2012)	EP (#7378)
Fiat 500	EP
Ford Fiesta (2010-2012)	EP (#7378)
Honda Fit (2009-2012)	EP (#7378)
Infiniti I30 (1996-2001)	EP (#7524)
Infiniti I35 (2002-2004)	EP (#7524)
Mazda MAZDA2 (2011-2012)	EP (#7378)
Nissan Versa (2010-2012)	EP (#7378)

Modified

10. Per the MAC, the Tesla Roadster meets the eligibility requirements of 18.1.A by virtue of being listed in Appendix A, class S Street Prepared. (#6886)

11. Per the MAC, he following new listing is added in Appendix A under Modified Class E, subsection A, Weight (with driver) vs. Displacement (#6886):

All purely-electric powerplants	*1800 lbs*

    In conjunction, clarify the first sentence under Modified Class D (in Appendix A) to read:

    "Modified Production and GT cars with *internal combustion* engine displacement..."

12. #7386 and 7395, section references: Correct the reference to 18.1.E in 18.1.F.4.C to be *18.1.F*. Also correct the reference to 18.1.E.3 in Appendix F under "DM AND EM AERODYNAMICS: to be *18.1.F.3*.

RALLYCROSS BOARD

RALLYCROSS BOARD MINUTES | April 4, 2012

The RallyCross Board (RXB) met via conference call April 4. Attending were Ken Cashion, Chairman, Brent Blakely, Karl Sealander, Warren Elliott, Stephen Hyatt and Ron Foley. Also in attendance were Stephen Harris and Robin Langlotz, BoD liaisons, and Howard Duncan and Brian Harmer from the National office.

The Secretary acknowledges that these minutes may not be in chronological order.

Committee Reports

1. RallyCross Safety Committee (Bob Ricker): None.

2. RallyCross Rules Committee (Warren Elliott): The Committee will work on rules for the Tuner Category proposed as a supplemental/exhibition class for the 2012 National events. Mandatory regulations in the RallyCross Rules will be reviewed and defined more clearly. The B-Spec announcement was made at the website on March 8 at the RallyCross Rules page. A press release regarding B-Spec cars will be released later, possibly in conjunction with the Tuner Category announcement. Several rules proposals have been submitted. Ken Cashion requested that all submissions and requests for clarifications be posted on the RallyCross forums for public viewing.

3. National Championship Committee (Ken Cashion): Brent Blakely will take over as Chairman of this committee from Ken Cashion. The National Supplemental Regulations will be published by April 20 in time for use by the first National Challenge event in May. Final resolution of debead language needs to be included as follows: *Debead (flat tire) situations will be red flagged, counted as a DNF, and no rerun given. Reruns will be granted for red flags thrown in error. If a car finishes a run on a debeaded (flat) tire without being red flagged by a course worker, no subsequent penalty will be given.* Discussion: Should there be a penalty for switching cars at a National event? Continued discussion advised with public comment.

4. Marketing Committee (Ron Foley): Several contributors have been contacted and have agreed to provide RallyCross content to *SportsCar*, the SCCA website, and other outside publications. Content is being actively sought from Regional programs. Ken Cashion suggested posting subjects at the forums asking for related submissions from the membership. The website has been updated. Some videos have been submitted and will be made suitable for website use. A press release on April 4 announced several upcoming National Challenge events. Two Facebook accounts currently exist, one of which is older and will be deleted in favor of the new site set up by the National office.

5. Divisional Steward Liaison (Stephen Hyatt): The RallyCross program development package is ready for use, with the exception of logo swaps. Steve Hyatt will work with the National office to finish it and make it available to the membership. It was suggested that there be some public recognition for the time and efforts of event organizers and other volunteers. The Divisional RallyCross Stewards (DRXS) will get feedback from the Regions in their respective Divisions on a volunteer incentive program. The Safety Steward training presentation is being requested by the Stewards and is deemed necessary to grow the programs. The DRXS are in favor of the awards for National Challenge events being produced and provided by the National office.

6. Forum Activity: Traffic is up with positive input.

Old Business

1. Growth discussion: Further discussion tabled until next meeting.

2. Committee composition/Recruitment: In an effort to fully staff all RallyCross committees, several individuals have been suggested as new recruits to the Safety, Rules, Marketing, and Championship committees. The committee chairmen will be contacting those individuals in the next month for recruitment.

New Business

1. Competition Boards Communication Committee Appointment: Bob Ricker has accepted this appointment as a representative from RallyCross.

2. Indiana Conflict: This issue involves two Regions in close proximity with an event date conflict. Z.B. Lorenc, Great Lakes Division RallyCross Steward, has been working with both Regions to resolve the conflict. While the RXB encourages as many Regional RallyCross events as possible, scheduling events in a way that take possible competitors away from other events is discouraged.

3. New Divisional Steward Orientation: The important need exists for quick and effective training of new Stewards. The Policies and Procedures manual contains important operational information for new Stewards. The 2012 RallyCross Rules also includes a list of Steward responsibilities. Stewards will be encouraged to have a successor in mind in order that training can begin prior to end of a Steward's term of service.

4. Detroit Letter: The RXB received an event summary letter from the chairman of a recent event there. Although the event went smoothly and was without incident, the RXB and the Divisional RallyCross Steward will continue to monitor the Detroit Region's progress with their program and the safety of their events.

Next meeting: May 2, 2012

Submitted by Karl Sealander, RXB Secretary

QUICK LINKS

The following items have been removed from regular inclusion in FasTrack News and can be found on SCCA's Web site at the following links:

CLUB RACING

Accredited Driver Licensing Schools: http://www.scca.com/clubracing/content.cfm?cid=50864
Forms: http://www.scca.com/downloads/#club
Technical Forms: http://www.scca.com/clubracing/content.cfm?cid=44472
General Competition Rules (GCR): http://www.scca.com/clubracing/content.cfm?cid=44472

SOLO

Forms: http://www.scca.com/downloads/#solo
Rulebook: http://www.scca.com/downloads/#solo

RALLY

Forms: http://www.scca.com/downloads/
Rulebooks: http://www.scca.com/downloads/

SCCA NATIONAL CONVENTION

Event page: http://www.scca.com/events/index.cfm?eid=3263

EVENT CALENDAR: http://www.scca.com/events/

Fastrack® news
official SCCA member notification
EFFECTIVE FIRST DAY OF THE MONTH UNLESS OTHERWISE NOTED June 2012

CONTENTS

BOARD OF DIRECTORS	**NONE**
CLUB RACING	**1**
CRB Minutes	1
Technical Bulletin	11
Court of Appeals	19
Time Trials Admin. Council	None
SOLO	**20**
SEB Minutes	20
RALLY	**24**
RallyCross	24
RoadRally	25
LINKS	**27**

CLUB RACING BOARD

SCCA Club Racing Board Minutes | May 1, 2012

The Club Racing Board met by teleconference on May 1, 2012. Participating were Jim Wheeler, Chairman; Chris Albin, Fred Clark, Jim Drago, Peter Keane, Tom Start, Mirl Swan, and Pam Richardson, secretary. Also participating were: Todd Butler and Richard Patullo, BoD liaisons; Terry Ozment, Vice President of Club Racing; Doug Gill, General Manager, Technical Services Department; John Bauer, Technical Manager, Club Racing. Bob Dowie participated as a guest. The following decisions were made:

SUGGESTED RULE FOR 2012
The following subject will be referred to the Board of Directors for approval. If approved in the June 2012 Board of Directors meeting, it will be effective immediately.

GCR
1. #8256 (Club Racing Board) Add STL as a National Championship for the 2012 Runoffs
Add STL as a National Championship for the 2012 Runoffs, if approved by the Board of Directors, effective immediately upon approval. STL will run with STU at the Runoffs in 2012.

SUGGESTED RULES FOR 2013
The following subjects will be referred to the Board of Directors for approval. Address all comments, both for and against, to the Club Racing Board. It is the BoD's policy to withhold voting on a rules change until there has been input from the membership on the presented rules. Member input is suggested and encouraged. Please send your comments via the form at http://www.crbscca.com/ or www.clubracingboard.com.

GCR
1. #6027 (Terry Ozment) Posting of Results
Change GCR 5.10.1: 5.10.1. Chief of Timing and Scoring

The Chief of Timing and Scoring (Chief of T&S) is responsible for accurately timing and scoring the event, specifically:

A. Recruiting, training, assigning, and supervising qualified personnel to time and score the event.
B. Providing the Chief Steward and the SOM any times and results they request.
C. Maintaining records of official times and lap charts for all competing cars.
~~D. Compiling and publishing the Official Results of all competitions; submitting copies of completed Official Results to the Race Chairman, to the SOM, the organizers, and the SCCA; and submitting complete Official Results (including qualifying) within 5 days to the Divisional Pointskeeper.~~
D. Compiling and publishing the Official Results of all competitions. By the end of the weekend's on-track activities, results must be available for all competitors and officials. These may be Provisional Results, particularly if there are pending protests or actions. (See also 5.10.4.) Results will be submitted to the Race Chairman, the SOM, the organizers, the National or Regional/Series Pointskeeper, and the SCCA. Uploading each session to MyLaps is strongly encouraged. Complete Official Results for a National race must be submitted within 2 days of the end of the event; results for a Regional race must be submitted within 5 days of the event. Every effort should be made to have Official Results ready to distribute by the end of the weekend.

Add to GCR 5.10.4: 5.10.4. Results
1. Provisional Results

A lap chart or a printout showing the order of finish and number of laps completed for each car shall be posted and titled as Provisional Results. The time of posting will be on the Provisional Results with the Chief of T&S's initials or signature, and a public address announcement will be made. *When there is a pending action for a particular race group, Provisional Results for that group may be distributed to officials and competitors in lieu of Official Results, with a notation printed stating the reason (i.e., pending outcome of action involving X class).*

2. Final Results

1. At the expiration of the protest period (30 minutes or the time stated in the Supplemental Regulations), Provisional Results may be considered final if Tech has cleared impound and the Chief Steward and/or SOM have no pending actions. The Final Results should be titled as Final or Official Results and shall include the following types of information: description of event, timing and scoring information, and driver information.

2. Official Results will be produced and distributed for a group with pending actions when the Chief Steward or Chairman SOM notifies the Chief of T&S that all actions and appeals are complete. The Chief Steward or Chairman SOM will inform the T&S Chief of any penalties when the group is declared final. The T&S Chief will distribute Final Results to the Race Chairman, the race organizers, the Chairman SOM, the SCCA, and the appropriate Pointskeeper.

Change GCR 3.7.2: 3.7.2. Results
The organizer is responsible to distribute results as follows:
~~A. Printed, photocopied, or electronic Official Race Results sent to the National Office within 5 days of the event.~~
~~B. For National races, 1 printed or photocopied or electronic copy of Official Qualifying Grids and Race Results sent to the appropriate Divisional Pointskeeper(s) within 5 days of the event.~~
~~C. P~~ printed or photocopied Official Race Results available for each entrant at the event; or mailed at the organizer's expense or emailed (at the entrant's option) within 7 days of the event, 7 days of the notification of any protest decision affecting Results, or 7 days of a Court of Appeals decision, whichever is applicable and whichever comes first.

2. #6259 (Club Racing Board) Retention of compliant parts in a mechanical protest

Replace all of 8.3.3.F: F. Preserving Evidence
~~All recorded evidence such as technical data, inspectors' reports, or measurements must be forwarded to the Club Office along with the bond. The Chairman SOM must assure that the chain of evidence is not broken by receiving and holding any parts surrendered by their owner for safekeeping pending appeal. The Chairman SOM has the authority to impound parts.~~

~~All impounded parts must be uniquely and identifiably marked when they are removed from the car. The parts must remain under the direct control of a licensed Tech Inspector or Steward until they are returned to the competitor or delivered into the direct control of a courier service for insured and traced shipping to the National Office for inspection, after which the parts will either be retained or returned to the competitor.~~

With: F. Preserving Evidence

1. *Documentation – all recorded evidence, such as technical data, inspectors' reports, or measurements must be forwarded to the Club Office.*
2. *Impounded parts*
   - *a. The Chairman SOM is authorized to impound parts.*
   - *b. The Chairman SOM must assure that the chain of evidence is not broken.*
     - *i. All impounded parts must be uniquely and identifiably marked when they are removed from the car.*
     - *ii. All impounded parts must remain under the direct control of a licensed Tech Inspector or Steward until they are returned to the competitor or are delivered by a licensed Tech Inspector or Steward into the direct control of a courier service for insured and traced shipping for third-party inspection.*
   - *c. At an event, components may be returned to the protestee under the following conditions without either party losing the right to appeal.*
     - *i. Both parties must agree in writing to the following:*
       1. *The official measuring the part(s) is qualified.*
       2. *The proper tool(s) was (were) properly used to take the measurement(s).*
       3. *The measurements as documented are not contested.*
       4. *The three items above are not subject to appeal.*
     - *ii. Parts found non-compliant*
       1. *Will be marked as such.*
       2. *Will be retained by the SCCA.*
       3. *May be the subject of appeal.*

3. #7532 (Janet Farwell) Correction to Appendix C. Licensing Minors GCR 1.4.B.1
The National staff requested this modification to Appendix C Licensing Minors GCR - 1.4.B.1., as follows: Change Appendix C,

1.4.B.1.: 1. A completed Parental Consent, Release and Waiver of Liability, Assumption of Risk and Indemnity Agreement. This document must be filed ~~annually~~ *every two years* until the Minor achieves the age of majority in his state.

4. #7640 (SCCA Staff) Add Language that will allow delegating of signing off on logbook
Change GCR 5.9.2.B: B. Minimum Event Safety Inspection/*Logbook*-Tech Sticker

Following the Annual Technical Inspection, minimum inspection for each event requires reviewing of the current Vehicle Logbook *and signing off the logbook page for the event*. If it is in order, a Tech sticker is issued. *The Chief of Tech may delegate signing the logbook page and issuing the Tech sticker to any worker holding a current Regional Tech license or above.* The driver's safety equipment does not need to be re-inspected.

5. #8171 (GCR Committee) 2.4. - 2.6. Modification
Please replace GCR 2.6 through 2.6 in its entirety:

~~2.4. EXECUTIVE STEWARD'S DRIVER OR OFFICIAL REVIEW~~
~~A driver's or official's Divisional Executive Steward may name and convene a committee to review the individual's conduct, car legality, competition record, and / or other matters. The committee has the authority to invoke penalties as specified in Section 7, and may also suspend any license, or may return a driver to an SCCA Drivers' School. The driver or official has the right to appeal the decision as specified in 8.4.~~

~~2.5. CRB'S OFFICIAL REVIEW~~
~~The license of any official may be suspended by the CRB, if in their view his actions are contrary to the best interest of the SCCA. A license may be suspended for a period of time specified by the CRB, or it may be revoked permanently. License revocation by the CRB may be appealed to the SCCA Board of Directors.~~

~~2.6. OFFICIAL'S DOWNGRADE OR LOSS OF LICENSE~~

~~2.6.1. The license of any official may be downgraded at any time for non- or under-participation, conduct violating the GCR, actions contrary to the best interest of the SCCA, or inability to perform satisfactorily at the current license grade.~~
~~2.6.2. The license of any official may not be renewed for non-or under-participation, conduct violating the GCR, or actions contrary to the best interest of the SCCA.~~

With:

2.4. DIVISIONAL ADMINISTRATOR AND EXECUTIVE STEWARD LICENSING AUTHORITY AND MEMBER RIGHTS

2.4.1. Divisional Administrators and Executive Stewards manage licenses in their respective specialties for their Divisions. They may downgrade, refuse to upgrade, suspend, or not renew the license of any official for non- or under-participation, conduct violating the GCR, actions contrary to the best interests of the SCCA, or inability to perform satisfactorily at the current license grade.

2.4.2. Any official subject to a license action as described in Sections 2.4.1. may request a review of the license action.

A. Request:

1. Must be made to the official's Executive Steward in writing.
2. Must be made within ten days of the license action.

B. Review Management:

1. Non-steward Licenses - the member's Executive Steward.
2. Steward licenses - the Chairman of the Stewards' Program

C. Review Committee:

1. Will be established by the Executive Steward or the Chairman of the Stewards' Program according to Section 2.6.
2. Will be conducted in accordance with the Stewards' Manual guidelines.
3. May uphold, modify, or overturn the license action.

D. Appeal:
1. Parties have the right to appeal the decision of the Review Committee to the Court of Appeals, per Section 8.4.

2.5. EXECUTIVE STEWARD DRIVER AND OFFICIAL REVIEW

A Divisional Executive Steward may convene a Review Committee in compliance with Section 2.6 to review a driver or official's conduct, car legality, competition record, and/or other matters. The Review Committee may invoke penalties as specified in Section 7, suspend or change the grade of any license, and/or return a driver to an SCCA Drivers' School. The driver or official has the right to appeal the decision of the Review Committee to the Court of Appeals, as specified in Section 8.4.

2.6. REVIEW COMMITTEE MEMBERS CONFLICTS OF INTEREST

Members of review committees created under Sections 2.4. and 2.5. may not have any significant conflicts of interest or ties to any of the parties. Members will be subject to the restrictions of 2.2.4.C., and may not have any other significant conflicts of interest with any of the parties. Reviews will be conducted in accordance with the Stewards Manual guidelines.

2.7. CRB OFFICIAL REVIEW
The license of any official may be suspended by the CRB, if in their view his actions are contrary to the best interest of the SCCA. A license may be suspended for a period of time specified by the CRB, or it may be revoked permanently. A license action by the CRB under this section may be appealed per 2.4.2.D.

Also, change 8.4.1: 8.4.1 Right to Appeal

Any participant or organization named as a party to a protest, a Chief Steward's RFA; *or any member named as a party in a Review Committee*, has the right to appeal a decision or penalty imposed upon him or it by the SOM or Review Committee*. The Chief Steward of an event has the right to appeal any decision or penalty imposed*.

****
The CRB, further requests that the BoD review and determine to either accept the reworded last sentence in the new section 2.7 above or to replace it with the original last sentence wording currently in GCR 2.5: *License revocation by the CRB may be appealed to the SCCA Board of Directors.*

Formula/Sports Racer
None.

Grand Touring
None.

Super Touring
ST
1. #7824 (Marc Hoover) vortex generators
Thank you for your letter. Change 9.1.4.D.2.b as follows: b. Factory wings, and spoilers, *and roof vortex generators* are permitted, but must be removed if an approved aftermarket wing is installed.

Improved Touring
IT
1. #4220 (Tom Lamb) Evaporative Emissions Rules for Improved Touring
Thank you for your letter. Add new section: 9.1.3.D.1.b.1.: *1. Fuel system evaporative emissions systems may be removed or replaced. Use or addition of rollover spill protection (i.e. check valve) is required.*

2. #4407 (Chris Schaafsma) Allow removal of non-functional wiring
Change 9.1.3.D.10: 1~~0~~*1*. Safety (note that sections, a, b, c, d, should follow with the new Safety location). Insert: 9.1.3.D.10 *10. Electrical;* 9.1.3.D.10.a: *a. Wiring specific to any component permitted to be removed, or disabled, may be removed. Required wiring rendered redundant by allowed modifications (i.e. engine management harness) must remain.*

Production
None.

American Sedan
None.

Showroom Stock
None.

Spec Miata
None.

Touring
None.

WHAT DO YOU THINK?
Formula/Sports Racer
FA
1. #7851 (Keith Grant) FA Engine Table WDYT
The CRB is considering removing the current FA engine table from the GCR effective January 1, 2013. The CRB believes the adoption of the engine table several years ago has created too many engine combinations that cannot be easily regulated to maintain parity within the class.

We have heard a number of complaints where drivers are concerned about the significant torque and horsepower numbers that are being produced from several of the engine combinations and the disparity and uncertainty that this brings to the class. Furthermore, drivers are concerned about the potential horsepower and torque that can be produced from other current engine configurations that have not been developed.

Under the current table, drivers can build and design their own blocks and heads from scratch without starting with an OEM part, and the CRB does not believe this is in the best interest of the class. If the table is eliminated, then the CRB is recommending that a new table be created specifying each specific engine/SIR/weight combination that will be allowed in the class.

The engines would be based on OEM blocks and heads unless specifically noted otherwise within the table. The Toyota 4ag 1600cc and the Swift .016a would automatically be added to the new table. Any additional engines would have to be approved by the CRB prior to January 1, 2013 in order to be eligible for the 2013 season. In order to have an engine/SIR/weight combination approved, a proposal must be submitted to the CRB prior to August 2012.

The proposal must include a minimum of the following information: engine manufacturer and engine size, dyno sheets showing horsepower and torque curves, and on track test data taken from the onboard data system showing speeds from both the proposed engine and a Toyota 4ag.

The CRB does not intend to eliminate any engines that are currently running in FA, but they believe that it is imperative to thoroughly review every engine/SIR/weight combination prior to approving it for the 2013 engine table. The CRB is seeking member input on this issue. Please comment if you are in favor or against this proposal.

MEMBER ADVISORIES
None.

NOT APPROVED BY THE CRB
GCR
1. #7452 (Al Wicht) define: “last completely scored lap”
Thank you for your letter. The rule regarding last completely scored lap is adequate as written.

2. #7591 (Stephen Hyatt) That the CRB appoint National Advisor in Emergency Services.
Thank you for your recommendation. The CRB does not see the necessity for such a position at this time.

3. #7830 (Richard Templeton) Rule clarification
Thank you for your recommendation, however, a mandatory penalty for refusing impound inspection is arbitrary and limiting, when there are already both RFA and CSA options available to the Chief Steward.

Formula/Sports Racer
F5
1. #7466 (H. Cory McLeod) Opposition to longer wheelbase in F500
Thank you for your input. Letter #6901, February 2012 Fastrack, was approved by the BoD in March, and became effective 4/1/2012.

FB
1. #7807 (Robert Laverty) Align SCCA Club ECU rules to SCCA Pro rules
Thank you for your request. The CRB has no plans to allow anything other than the OEM ECU in FB and has no plans to align Club Racing and SCCA Pro rules for FB.

Grand Touring
GT
1. #7729 (Rick Ricker) Objection to change GTCS #7509 Add to 9.1.2.F.4.i.5.E
Thank you for your letter. The CRB has no plans to introduce newer intake technologies into GT at this time.

GT3
1. #7708 (Joe Kristensen) Weight reduction for stock transmissions
Thank you for your letter. The CRB has no plans to provide a weight reduction for stock transmissions. Transmission rules are adequate as written.

GTL
1. #7687 (Kyle Disque) Ban non ferrous springs
Thank you for your request. The CRB reviewed your concerns and do not see a need to restrict this technology.

Super Touring
ST
1. #8127 (Evan Webb) Make cars from 1980-on eligible for ST
Thank you for your submission. This is not recommended at this time. The philosophy of ST doesn't allow cars older than 1985.

STU
1. #8029 (Robert Frost) BMW 1M homologation
Thank you for your inquiry. The chassis would be legal for STU, but the engine would not. Twin turbos are not allowed. You may choose an alternate engine that meets STU regulations in the chassis.

STL
1. #7823 (Rod Dykhouse) Weight reduction
Thank you for your request. All STL cars received a weight increases in 2012 and are equally affected. The CRB is currently monitoring the situation and has no plans at this time for adjustments.

Improved Touring
IT
1. #4229 (Dave Gran) Multivalve Adder
Thank you for your letter. The CRB will continue to include the multi-valve adder in the IT process calculation. However, if you have a specific car that needs an additional review, the CRB will entertain such a review to determine if the use of the adder is correct for that car.

2. #5335 (Stephen Blethen) Dual Car classification
Thank you for your letter. Please see letter #5331.

3. #5434 (Charles O'Toole) Clarify update / Backdate allowance
Thank you for your input. The CRB believes the rule is adequate as written.

4. #7542 (Patrick Womack) Classification request for Z3 M Roadster
Thank you for your letter. This vehicles performance exceeds any current class in IT. Please consider other classes like ST.

ITA
1. #3307 (Mark Andy) Re-examine weight 95-99 Dodge Neon SOHC
Thank you for your letter. The CRB will continue to monitor this vehicle's performance; however, at this time, there is no need for a weight change.

2. #5331 (David Spinnett) Concern with reclassification to IT/B
Thank you for your request. The CRB has no future plans to dual class cars in IT.

3. #7355 (Jesse Prather) Rear ends 1.6 Miata
Thank you for your request. This change is not consistent with IT philosophy.

4. #7356 (Jesse Prather) Rear ends 1.6 Miata
Thank you for your letter. Please see letter #7355.

Production
HP
1. #7566 (Mark Brakke) Equal weight/ cc for similar cars
Thank you for your request. There are differences between the involved cars that bear on their performance potential. One

example is the higher valve lift for the Mini. A possible approach would be to reduce the weight and the valve lift for the Mini. However, this may negatively impact competitors that are already developing the Mini based on the current listed valve lift. It is critical that the Mini be campaigned so its true potential can be observed. If at that time it is apparent the car has too high a minimum weight, adjustments can be made.

American Sedan
None.

Showroom Stock
SSC
1. #7794 (Mark McCaughey) Add 15% restrictor and remove 85lbs to V-6 Tiburon
Thank you for your input. The CRB does not feel weight and restrictor changes are required for this car at this time. However, the CRB will continue to monitor the car's performance.

Spec Miata
None.

Touring
None.

PREVIOUSLY ADDRESSED
Grand Touring
GT
1. #7730 (Mark Ward) RE: Letter 7202
Thank you for your letter. Please see the April 2012 Fastrack page 11 (Member Advisory) that explains the CRB philosophy for GT. Your original letter #7202 was one of the 23 letters received and considered in establishing that philosophy.

NO ACTION REQUIRED
GCR
1. #5214 (Jeremy Lucas) Open Hoods for Impound
Thank you for your suggestion. Per the GCR, the Chief Steward has the authority to request that Tech include this in their event Technical Inspection Plan. You are encouraged to contact your local Steward team with this suggestion.

2. #7519 (Padraic Garrety) Removable roll cage door bars
Thank you for your letter. Removable bars that meet the requirements of GCR 9.4.G.7.a are compliant.

3. #7584 (John Haydon) Driver Restraint Harness "Common Release" clarification
Thank you for your question. Sternum latches do not comply with 9.3.19.C.

4. #7630 (Hal Williams) Lug nut thread engagement
Thank you for your request. It is the responsibility of the driver/entrant to ensure that all fasteners are adequate for the application.

5. #7648 (Peter Villaume) National Administrator for Emergency Services
Thank you for your recommendation. Please see letter #7591.

6. #7650 (Tracy Hyatt) Replacement of National Admin. for Emergency Services
Thank you for your recommendation. Please see letter #7591.

7. #7659 (Richard Nester) National Administrator for Emergency Services
Thank you for your recommendation. Please see letter #7591. Also, thank you for your suggestion regarding the pace car. Please see GCR 6.6.1, which is adequate as written.

8. #7719 (Bill Dormandy) GCR proposed change # 7627
Thank you for this recommendation. The rule is adequate as written.

9. #7724 (Mat Cutter) class consolidation
Thank you for your letter and your efforts. The CRB appreciates your thoughtful and articulate comments. These comments will be forwarded to the Board of Directors.

Formula/Sports Racer
F
1. #7493 (Michael Signore) Comments on #6901 F600 Revised rules
Thank you for your input. Letter #6901, February 2012 Fastrack, was approved by the BoD in March, and became effective

4/1/2012.

F5

1. #7308 (Jack Walbran) Comment on Proposal # 6901
Thank you for your input. Letter #6901, February 2012 Fastrack, was approved by the BoD in March, and became effective 4/1/2012.

2. #7456 (Robert Christensen) longer wheelbase f500-600
Thank you for your input. Letter #6901, February 2012 Fastrack, was approved by the BoD in March, and became effective 4/1/2012.

3. #7458 (Herb Noble) 90 inch wheelbase in F500
Thank you for your input. Letter #6901, February 2012 Fastrack, was approved by the BoD in March, and became effective 4/1/2012.

4. #7486 (William Smeal) opposition of letter #7156
Thank you for your input. Letter #6901, February 2012 Fastrack, was approved by the BoD in March, and became effective 4/1/2012.

5. #7496 (Chuck McAbee) Request 7156 by S Jay Novak -oppose increased wheelbase for F5 &
Thank you for your input. Letter #6901, February 2012 Fastrack, was approved by the BoD in March, and became effective 4/1/2012.

6. #7569 (S. Jay Novak) please approve F600
Thank you for your input. Letter #6901, February 2012 Fastrack, was approved by the BoD in March, and became effective 4/1/2012.

7. #7585 (Jim Murphy) 90" Wheelbase
Thank you for your input. Letter #6901, February 2012 Fastrack, was approved by the BoD in March, and became effective 4/1/2012.

FC

1. #7752 (Bill Lyon) Request info on head/Cam combinations.
Thank you for your letter. The CRB does not make engine recommendations to competitors. We understand your desire to use the best components however approved part combinations for what you are looking for would have demonstrated parity and not performance advantage.

Grand Touring
GT2

1. #7771 (Kevin Clower) Eligibility
Thank you for your letter. Currently there is one BMW 3.0L engine classified in GT2. If this is not the same engine that you are requesting you may send the specs and request classification of your particular engine. To answer your second question, your car may be eligible to run in Regional classes such as SPO (Race tires) or ITE (DOT Race tires). Please check with your region.

Super Touring
ST

1. #8076 (steven simpson) open engine pulley size and composition for ST
Thank you for your request. Please see letter #7959 (Technical Bulletin).

2. #8143 (Evan Webb) STL/STU rules clarification
Thank you for your inquiry. While we recognize that the full range of Sciroccos from 1974-1988 were considered by Volkswagen to be "A1" chassis, there is a clear and distinctive re-design in body style - thus model - for 1982. This change was generally recognized as the "Mark 2 Scirocco". As such, the CRB considers this to be a model change, thus making earlier "Mark 1" not eligible for Super Touring.

STO

1. #6769 (JOHN SLINKARD) Allow a turbo for the S2000.
Thank you for your letter. Turbochargers may be added to a non-turbo engine on a case by case basis. Requestor must provide engine and turbocharger specifics, including part numbers, before they will be considered.

STU

1. #6838 (Peter Keane) Allow turbo to be added to the SR20
Non U. S. spec, generally available, engines will be considered on a case by case basis for all ST classes for 2013.

2. #7060 (Scott Peterson) Clarification of STU specific suspension rules/allowances
Thank you for your analysis. The CRB believes the rule is adequate as written.

3. #7855 (Ian Stewart) Request Clarification on Body/frame Prep in ST
Thank you for your request. The rule is adequate as written.

4. #8075 (steven simpson) allow SFI approved engine dampeners in ST
Thank you for your request. Please see letter #7959 (Technical Bulletin).

STL
1. #7085 (ST Committee) Clarify suspension reinforcement for STL
Thank you for your request; however, it is not consistent with STL class philosophy. Super Touring Light (by philosophy) intentionally offers "a lower level of allowed modifications compared to STU and STO." The regulations lean more toward Improved Touring in terms of suspension. As such, the CRB feels that allowing "reinforcements" of attachment points is not within the philosophy of the class and likely will lead to unintended modifications such as reinforcements over and above that needed for basic dependability and/or significant and undetectable moving of pickup points.

Improved Touring
None.

Production
HP
1. #7768 (Mark Brakke) Reduce weight of 2007 Mini Cooper to 1.27 lbs/cc.
Thank you for your request. Please see letter #7566.

2. #7772 (Mark Brakke) Reduce race weight of 2007 Mini Cooper
Thank you for your letter. Please see letter #7566.

American Sedan
None.

Showroom Stock
SS
1. #7793 (Mark McCaughey) Expose SSC plans for 2013.
Thank you for your request. Initial spec lines for 2012 Touring Classes 1 through 4 were published in the May 2012 Fastrack. As additional modifications to those spec lines become available, they will be presented for member input.

SSB
1. #7791 (Mark McCaughey) Allow Alternate Shocks for Celica GTS.
Thank you for your request. There is consideration for this item as part of the package for the 2013 Touring class restructuring ruleset.

2. #7792 (Mark McCaughey) Allow negative camber for the Celica GTS.
Thank you for your request. There is consideration for this item as part of the package for the 2013 Touring class restructuring ruleset.

Spec Miata
None.

Touring
T2
1. #7711 (Matt Samojedny) Add H&R sway Bars for E92 M3
Thank you for your request. There is consideration for this item as part of the package for the 2013 Touring class restructuring ruleset.

2. #7742 (Matt Samojedny) Add Upgraded brakes for 2012 Season E92 M3
Thank you for your request. There is consideration for this item as part of the package for the 2013 Touring class restructuring ruleset.

3. #7760 (John Tecce) Approve the current T2 996 Porsche spec for the 2010 Cayman S.
Due to the timing of your request, this isn't possible for 2012. Thank you for your request. There is consideration for this item as part of the package for the 2013 Touring class restructuring ruleset.

T3
1. #7710 (Tim Myers) Request Brembo brake kit
Thank you for your request. There is consideration for this item as part of the package for the 2013 Touring class restructuring ruleset.

RESUMES
None.

CLUB RACING TECHNICAL BULLETIN

DATE: May 20, 2012
NUMBER: TB 12-06
FROM: Club Racing Board
TO: Competitors, Stewards, and Scrutineers
SUBJECT: Errors and Omissions, Competition Adjustments, Clarifications, and Classifications

All changes are effective 6/1/2012 unless otherwise noted.

GCR
None.

Formula/Sports Racer
FA
1. #7850 (Keith Grant) FA Engine Table
Make the following changes to Table 1 and Table E:

Table 1						
Spec Line	**Engine Series**	**Max. Displ. (cc)**	**Max Valves/Cyl**	**Notes**	**Req'd Restrictor**	**Min Weight**
C	4 Cylinder 4 Cycle	1615	4		n/a	~~1230~~ *1200*

Table E					
Spec Line	**Maximum Displacement (cc)**	**Maximum Compression Ratio**	**Max SIR (mm) / Min. Weight**	**Max SIR (mm) / Min. Weight**	**Max SIR (mm) / Min. Weight**
E1	1800	11:01	32/1155	33/1230	34/1305
E2	1800	Unrestricted	30/~~1155~~ *1205*	31/~~1230~~ *1270*	32/~~1305~~ *1345*
E3	2000	10:01	32/1180	33/1255	34/1330
E4	2000	Unrestricted	30/~~1180~~ *1265*	31/~~1255~~ *1330*	32/~~1330~~ *1405*
E5	2300	9:01	31/1205	32/1280	33/1355
E6	2300	Unrestricted	29/~~1205~~ *1335*	30/~~1280~~ *1410*	31/~~1355~~ *1475*
E7	2500	9:01	31/1230	32/1305	33/1380
E8	2500	Unrestricted	29/~~1230~~ *1400*	30/~~1305~~ *1475*	31/~~1380~~ *1540*

Add the following to the bottom of Table E:

The following additional notes apply to all engine spec lines in this table:
Note 1 Sequential transmission Add 25 lbs
Note 2 Fuel injected motors (except Volkswagen) Add 25 lbs
Note 3 Non-metallic Chassis Add 25 lbs

F5
1. #7767 (Charles McAbee) Change Rotax sleeves effective date.
Effective immediately, add a new section 9.1.1. E.14.K as follows:

"*The following aftermarket replacement cylinder sleeves manufactured by Los Angeles Sleeve of Santa Fe Springs, CA are for the Rotax 493 and 494 respectively:*
Rotax 493: FL-1286 (69.5mm)
Rotax 494: FL-1224 (69.5mm)
Note: the appearance of the port is machined as opposed to the as-cast port of the OEM sleeve and the sleeves are machined to size after installation in the cylinder casting."

Grand Touring
GT2
1. #7733 (Bill Davis) Update/Add EcoTec Engines

In the GT2 Pontiac engine table, LE5, change the name as follows:
~~LE5~~ *EcoTec*

In the GT2 Pontiac engine table, add a new engine as follows:

Engine Family	Engine Type	Bore x Stroke (mm)	Disp. (cc)	Head Type	Valves / Cyl.	Fuel Induction	Weight (lbs)	Notes
EcoTec	*DOHC*	*88.9 x 94.6*	*2349*	*Alum, Crossflow*	*4*		*2080*	*GM racing block #XGB615 and cylinder head#XGBH614 allowed*

Improved Touring
ITS
1. #6654 (Andy Bettencourt) Revision of weight for S13 and S14 ITS 240SX's
In ITS, Nissan 240-SX/S13 (91-94), change the weight as follows: ~~2650~~ *2600*
In ITS, Nissan 240-SX/S14 (95-98), change the weight as follows: ~~2650~~ *2600*

ITA
1. #7633 (Christopher Childs) Increase weight of 1.8 ITA Miata
In ITA, Mazda MX-5 / Miata includes R (94-97), change the weight as follows: ~~2380~~ *2460*

Production
1. #8166 (Prod Committee) Add throttle body dimensions to spec. pages
On cars using fuel injection the throttle body bore size should be added to the vehicle specifications. A listing of bore sizes determined to date is attached. On vehicles without a bore size specified the entry should indicate "stock throttle body inside diameter"

EP				
Manufacturer	**Model**	**Years**	**Primary**	**Secondary**
Acura	Integra	86-89	55 mm	
	Integra GSR	94-00	60 mm	
	Integra Type-R	97-00	62 mm	
Alfa Romeo	Alfetta GT	75-79		
	GTV	2000		
	GTV-6	81-86		
	Spider			
BMW	2002/2002tii			
	318i/320			
	Z3 1.9 litre			
	Z3 2.5 Litre			
	Z3 2.8 Litre			
	325i/is	84-91		
	318is	91		
	318is E36	92-95		
Chevrolet	Cavalier 2.0	82-87		
Dodge	Neon	95-99		
	Neon ACR	01-02		
	Omni GLH 2.2 litre			
	Shelby Charger/ Omni O24	83-84		
Fiat	124 Spider 1.6 and 2.0			
Ford	Escort 1.9	85-87		
	Probe	93-97		
Honda	Civic Del Sol Si	93-94	56 mm	
	Civic Si	99-00	60 mm	
	S2000	00-08	62 mm	

	Prelude Si		60 mm	
	Prelude Si VTEC	93	60 mm	
Hyundai	Tiburon FX 2.0	97-98		
Caterham/Lotus	7			
lotus	Elise			
Mazda	Miata 1.6			
	Miata 1.8	94-97		
	Miata 1.8	99-02		
	MX-5	06-09		
	Protégé ES	01-03		
	RX-7 12A			
	RX-7 13B			
	RX-8			
Mercedes	190E 2.3	84-93		
Mercury	Capri 2.3	79-86		
Nissan	200-SX S10	77-79		
	200-SX SE-R			
	240-SX S13/S14	91-98		
	NX-2000			
	Senta SE-R	90-94		
	HL510	78-81		
Pontiac	Fiero 2.8	85-88		
	Solstice	06-09		
Porsche	944/924S 2.5 2V	83-88		
	944S	87-88		
Saturn	Sky	07-09		
Toyota	Celica II 2.4	81-82		
	Celica 2.4	83-85		
	Corolla GTS (4AG)	84-89		
	MR-2			
	Supra	82-85		
Volkswagen	Golf GTI 16V	87-88	35mm	52 mm
Volvo	P1800			

FP

Manufacturer	Model	Years	Primary	Secondary	Alternate
Acura	Integra 1600	86-89	55 mm		
	Integra	90-93	58 mm		
	Integra LS	95-01	60 mm		
Alfa Romeo	Alfetta GT and Sedan	75-79			
	GTV 1750	67-72	34 mm restrictor		
	GTV and Berlina	72-74			
	Spider	72-89			
BMW	2002tii				

Dodge	Shelby Charger/ Omni 024	83-84			
Honda	Civic/Civic Si	84-87	33 mm	42 mm	
	Civic 1.5 litre	88-91	42 mm		
	Civic Del Sol		60 mm		
	Civic Si	88-91	55 mm		
	Civic Si	92-95	56 mm		
	Civic EX VTEC SOHC	92-95	56 mm		
	CRX 1.5 litre	88-91	33 mm	42 mm	
	CRX/ CRX Si	84-87	42 mm		
	CRX Si	88-91	55 mm		
	Prelude	84-87	not carbureted		
Mazda	626				
	GLC 323				
	Miata 1.6 litre				
Mercury	Capri 1.6 litre	91-94			
Opel	GT				
	Manta				
	1900				
Porsche	924				
Saab	900				
Saturn	SL2/SC/SC2				
Suzuki	Swift GT				52 mm
Toyota	MR-2 1.6 litre	85-89			
Volkswagen	Golf 1.8 litre	85-92	35 mm	52 mm	
	Golf III				
	Jetta	82-84	35 mm	52 mm	
	Jetta 1.8 litre	85-92	35 mm	52 mm	
	Rabbit 1457/1472		35 mm	44 mm	35/52 mm
	Rabbit 1588		35 mm	44 mm	35/52 mm
	Rabbit 1715/1780		35 mm	52 mm	
	Scirocco 1588		35 mm	44 mm	35/52 mm
	Scirocco 1457/1471		35 mm	44 mm	35/52 mm
Volvo	P1800				
	142				

HP				
Manufacturer	**Model**	**Years**	**Primary**	**Secondary**
Fiat	X-1/9 1500			
Ford	Festiva	88-93		
Honda	Civic/ Civic Si	84-87	33 mm	42 mm
	Civic 1.5 litre	88-91	42 mm	
	CRX/ CRX Si	84-87	33 mm	42 mm
	CRX 1.5 litre	88-91	42 mm	
	Fit	07-09	45 mm	
Mini	Cooper	02-06		

Porsche	914-4			
Renault	Alliance 1.4 litre			
	Alliance 1.7 litre			
Suzuki	Swift 1.3 Litre	89-94		
Toyota	Yaris	06-09		
Volkswagen	Golf GTI, GT, GL 1780		35 mm	52 mm
	Jetta 1780	85-91	35 mm	52 mm
	Rabbit 1780 Cabriolet		35 mm	52 mm
	Rabbit 1588		35 mm	44 mm
	Rabbit 1715	81-84	35 mm	44 mm
	Rabbit GTI 1780	83-84	35 mm	52 mm
	Scirocco 1457/1471		35 mm	44 mm
	Scirocco 1588		35 mm	44 mm
	Scirocco 1715	81-84	35 mm	44 mm
	Scirocco 1780 8V	83-88	35 mm	52 mm

EP
1. #8165 (Prod Committee) reduction of EP weights
Reduce weights of the following EP cars:
Honda S2000 (00-03) ~~2520 *2583 **2646~~ *2450 *2511 **2573*
Honda S2000 (04-09) ~~2580 *2645 **2709~~ *2510 *2573 **2636*
Porsche Boxster (97-99) ~~2650 *2716 **2783~~ *2555 *2619 **2683*
Porsche Boxster (00-04) ~~2850 *2921 **2993~~ *2700 *2768 **2835*
Pontiac Solstice (06-09) ~~2620 *2686 **2751~~ *2500 *2563 **2625*
Saturn Sky (07-09) ~~2620 *2686 **2751~~ *2500 *2563 **2625*
Porsche 944S (87-88) ~~2600 *2665 **2730~~ *2550 *2614 **2678*

FP
1. #7826 (Toby Larsson) Class the 94-99 Celica (non GT) in FP
In FP, classify the 94-99 Toyota Celica as follows:

FP	Prep. Level	Weight (lbs.)	Engine Type	Bore x Stroke mm.(in.)	Displ. cc./(ci)	Block Mat'l	Head/PN & Mat'l	Valves IN & EX mm/ (in.)	Carb. No. & Type	Wheelbase mm/(in.)	Track (F/R) mm/ (in.)
Toyota Celica 94-99	*2*	*2150 * 2204 ** 2258*	*4Cyl. DOHC*	*81x85.5 3.19/3.37*	*1762*	*Iron*	*Alum*	*(I) 32/1.26 (E) 27/1.06*	*Fuel injection*	*2540 100*	*1626/1605 64/63.2*

FP	Wheels (max)	Trans. Speeds	Brakes Std. (mm/ (in.))	Brakes Alt.: mm/(in.)	Notes:
Toyota Celica 04-99	*15x7*	*5*	*(F) 253 vented (R) 200 Drum*		*Comp. Ratio limited to 11.0:1, Valve lift limited to .450".*

HP
1. #7834 (Neil Verity) Reduce the weight for the HP MGB.
In HP, level 2 MGB and MGB-GT, change the weight as follows: ~~2100* 2153** 2205~~ *2050 *2101 **2153*

Super Touring
STO
1. #7795 (George Cichon) Porsche 996 Turbo Spec Line Request
Create spec line under STO:
Porsche 996 Turbo AWD @ 3,050 pounds
Intercooler:
ERP Intercooler kit complete with all ducting and components #ERP.DP996TT.1055.S
Body:
L.F. fender #ERP.996.031
R.F. fender #ERP.996.032
Front bumper #ERP.996.311
Front splitter 2" #ERP.996.345
Rear bumper #ERP.996.211

Engine:
Intake manifold R&L #997.110.619.90
Intake manifold center #997.110.120.53
Throttle body - single #997.110.039.93
Cylinder heads (non Vanos) #996.104.012.94
Intake cams #996.105.235.92 (0.484 lift)
Exhaust cams #996.105.245.90 (0.440 lift)
Cam housing R. (non Vanos) #996.105.040.91
Cam housing L. (non Vanos) #996.105.039.91
Garrett GT28 turbo chargers
2 - 44 mm TIRs

In STO, Porsche 996/997TT (3265 lbs.), change the restrictor as follows: ~~(2) 32mm TIRs~~ *(2) 44mm TIRs*

2. #8178 (ST Committee) Reduce Viper restrictor size
In STO, Dodge Viper, incl Comp Coupe, ACR/ACR-X, reduce the 8300cc and 8400cc spec lines as follows: ~~(2) 55mm flat plates~~ *(2) 53mm flat plates* (8400cc with 60mm plates is unchanged)

ST
1. #7854 (Ian Stewart) Clarification on Fender modifications
Add new section 9.1.4.C.10 as follows:
"Fenders and wheel openings shall remain unmodified. It is permitted to roll under or flatten any interior lip on the wheel opening for tire clearance. Cars with plastic/composite fenders may remove any interior wheel opening lip, but the resulting material edge shall be no thinner than the basic fender material thickness. Non-metallic inner fender liners may be removed."

2. #7959 (Greg Amy) E&O: Allow Alternate Pulleys
Clarify engine pulley usage by adding section 9.1.4.G.21 as follows:

"*Alternate water pump, alternator, crankshaft dampers, and/or power steering pulleys are unrestricted. Crankshaft pulley is unrestricted for all non-supercharged engines; supercharged engines must use OEM crankshaft and supercharger pulleys.*"

STL
1. #7654 (David Heinz) OEM Braking System Replacement Clarification
Errors and Omissions clarification.

Strike as follows from main regs, 9.1.4.O, Brakes:

1. ... ~~Original equipment master cylinders and pedals may be replaced.~~ ...
~~7. Power assisted braking systems are permitted.~~
~~8. The balance of braking forces between the two wheels on an axle shall be equal and non-adjustable.~~
~~9. The balance of braking forces between the front and rear axles may only be adjusted by the driver through:~~
~~a. Direct intervention on the position of the center of the joint, on the linkage lever of the hydraulic pumps of the front and rear circuits.~~
~~b. Direct intervention on a proportioning valve in which the intake pressure is adjusted through a pre-loaded spring.~~

Replace 9.1.4.O.1:

~~1. Aftermarket brake proportioning valves are permitted.~~

...with:

1. Brake proportioning valves may be used provided that they are of the in line, pressure limiting type.

Edit 9.1.4.O.10:

10. ~~Brake calipers may be OEM or aftermarket.~~ *When any allowed alternate calipers are used, c*alipers must be mounted in the same location and orientation as the OEM calipers. *OE c*aliper mounting tabs may be modified or removed *to facilitate installation.*

Insert as last item number:

13. See individual class regulations for further restrictions/allowances.

Delete 9.1.4.1.H.3 (STO) as redundant to 9.1.4.O.5:

~~3. Brake duct water spray cooling systems are permitted.~~

Add to both 9.1.4.1.H (STO) and 9.1.4.2.G (STU):

3. Original equipment master cylinders and pedals may be replaced.
4. Power assisted braking systems are permitted.
5. The balance of braking forces between the two wheels on an axle shall be equal and non-adjustable.
6. The balance of braking forces between the front and rear axles may only be adjusted by the driver through:
a. Direct intervention on the position of the center of the joint, on the linkage lever of the hydraulic pumps of the front and rear circuits.
b. Direct intervention on a proportioning valve in which the intake pressure is adjusted through a pre-loaded spring.

Standardize format on 9.1.4.3.G (STL) and add master cylinder allowance:

1. *Unless otherwise allowed in these regulations, all* OEM brake system components must be used.
2. Rotors - The standard production rotors or any 1- or 2-piece ferrous rotors that do not exceed 290mm in diameter and 28mm in thickness are permitted.
3. Calipers - The standard production calipers or any 4-piston or fewer calipers may be used.
4. Any alternate OEM master cylinder and/or booster are allowed, as long no modifications are done to any other component for installation.
5. Modifications may be made to the foot pedals to improve the comfort of and control accessibility to the driver.

2. #8202 (david mead) clarification of STL
In section 9.1.4.3.I.2, Classify the ITA and ITS RX7 in STL by adding the following language to the end of the paragraph: "*ITA and ITS RX7 can compete in STL at their listed IT weights.*"

American Sedan
None.

Spec Miata
None.

Touring/Showroom Stock
T1
1. #7815 (SCCA Staff) Clarify T1 C6 Corvette Spec Line
In T1, Chevrolet Corvette C6 Coupe (05-10) / Grand Sport (10-12), clarify the brake weights by making the following changes:

T1	Bore x Stroke(mm)/ Displ. (cc)	Wheel-base (mm)	Max Wheel Size (inch)	Tire Size	Gear Ratios	Final Drive	Brakes (mm)	Weight (lbs)	Notes:
Chevrolet Corvette C6 Coupe (05-10) / Grand Sport (*10-12*)	101.68 x 92.0 5967 (LS2) 103.26 x 92.0 6162 (LS3)	2685	18 x 10 (F) 19 x 11 (R) or 18 x 11 (F) 19 x 13 (R)	315/35 max. (F&R) or 315/35 max (F) 345/35 max (R) Rear tires may protrude up to 1.0" with GM T1 Performance Suspension package. Max. camber: (F) -3.5 (R) -2.5 with GM T1 Performance Suspension package.	2.66, 1.78, 1.30, 1.00, 0.74, 0.50, or 2.97, 2.07, 1.43, 1.00, 0.71, 0.57	3.42	(F) 325 / 340 Vented Disc (R) 305 / 330 Vented Disc or (F) 355 x 32 Vented Disc (R) 340 x 26 Vented Disc or May use 2-pc steel rotors with alum. hats up to 5% larger than Z51 rotor. ---------- ~~LS2 may use Grand Sport brake package~~. ~~Any brake caliper pistons allowed.~~ ~~May use any four piston brake caliper and brackets with a 50 pound weight increase.~~ ~~Z06 brake calipers allowed~~.	LS2: *3180* LS3: 3450 Add 50 lbs. for larger wheels and/or tires *May use any four piston brake caliper and brackets with a 50 pound weight increase.*	C6 T1 Suspension kit and Z51 option allowed. Floor may be modified to facilitate installation of cage mounting plates. The max. tire sizes supersede TCS 9.1.10.D.7.b. Removable roof panel shall be installed. The following parts are allowed: GM oil pan #12630477; GM radiator baffle # 25953429 (LS3 only); fan shroud, Phoenix part # 1005422; Canton Accusump part # CA24006 or # CA24024, along with Electric solenoid W/ epc # CA24273, Accusump Check Valve # CA2428, and Wheel to Wheel Adapter block # 0760-50001, and related hoses and mounting brackets; 180 degree thermostat Hypertech # 1015; Lingenfelter Performance Engineering #L310055204 thermostat (LS2 only); HD oil pressure shim Phoenix part # 1005421. Wrapping of tie-rod ends to shield heat is permitted. Trimming of the lower edge of the center of the air dam is allowed up to a depth of 3.9 cm. ARE dry sump system part #3021 S permitted; the following parts are included: mount w/tensioner and spacer #3020YM, serpentine belt #4032S, pulley #4SERP, oil tank #7030, tank bracket #7000, breather catch can # 7100, filter adapter #4010, damper assembly #8005. Aviaid Dry Sump System part number 008-10001 is permitted; the following parts are included: 3-stage pump 13111-1182, mounting hardware 40082 and 40018-83-1, HTD pump pulley 11649, HTD belt 46476, ATI damper assembly 917289, pan assembly 152-52504-10001, and tank assembly 110-50020-10001. The oil tank for either system shall be installed in the current battery location and the battery must be relocated to the same location as the 08 Corvette Z06; GM battery mounting bracket and hardware must be used. Alternate wheel bearings SKF Part # BAR 5049C permitted. Entire parking brake assembly (including interior lever) may be removed. *Any brake caliper pistons allowed. Z06 brake calipers allowed.*

T2

1. #7516 (Matt Samojedny) Reduce weight of E92 BMW by 100lbs.
In T2, BMW E92 M3 (08-12), change the spec line as follows:
Weight: ~~3700~~ *3500*
Add to the Notes: *55mm restrictor required. Restrictor must be placed in the front of the factory engine air intake manifold opening. The plate must seal the opening so that all air entering passes through the restrictor.*

2. #7721 (Cheyne Daggett) Correct Alternate Driveshaft Weight T2 Mustang V6
In T2, Ford Mustang V6 (11-12), change the alternate driveshaft weight as follows: ~~3525~~ *3425*

3. #7817 (John Tecce) Allow the Factory Cayman S Paddle Shift.
In T2, Porsche Caymen S (2010), add to the notes as follows: "*Porsche DCT permitted at a +75lb weight penalty.*"

CLUB RACING COURT OF APPEALS

JUDGEMENT OF THE COURT OF APPEALS
David Lempert vs. SOM COA Ref. No. 12-05-SE
May 1, 2012

FACTS IN BRIEF

At the conclusion of Race Group 2 on April 1, 2012 at the Double SARRC Regional at Palm Beach International Raceway, ITR #77 driven by David Lempert was observed in impound to have non-compliant shock absorbers.

Scrutineer Timothy Lee reported that the shock absorbers had remote reservoirs in violation of 2012 GCR 9.1.3.5.b.1. Chief Steward (CS) John Edridge examined the shock absorbers, verified the report, and filed a Chief Steward's Action (CSA) disqualifying #77. Mr. Lempert protested the penalty as being excessive and not in accordance with published 2012 Standard Penalty Guidelines.

The Stewards of the Meeting (SOM), Norm Esau and Sandy Jung, Chairman, held a hearing, heard witnesses, and disallowed Mr. Lempert's protest. He is appealing that decision.

DATES OF THE COURT

The SCCA Court of Appeals (COA) Tom Hoffman, Rick Mitchell, and Michael West, Chairman, met on April 18 and 25, 2012 to review, hear and render a decision on the appeal.

DOCUMENTS AND OTHER EVIDENCE RECEIVED AND REVIEWED

1. Appeal letter from David Lempert and related documents, received April 9, 2012.
2. Official Observers Report and related documents, received April 19, 2012.
3. E-mail statement from John Edridge (CS), received April 19, 2012.
4. E-mail from Sandy Jung (CSOM), received April 20, 2012.

FINDINGS

In testimony to the COA via email, the CS stated he determined that the violation was substantial based on Mr. Lempert's statement that he had raced the car in its current configuration for several years. The CS, therefore, imposed a 2012 GCR authorized penalty that appropriately addressed the infraction. The CS provided Mr. Lempert with an explanation for the action when he rendered his ruling. The COA notes Mr. Lempert provided the same car configuration information to the SOM and the Court of Appeals.

The SOM found the Chief Steward's action to be in accordance with the 2012 GCR and re-addressed the basis for the penalty with Mr. Lempert. The protest was disallowed and, although within their powers to do so, the SOM chose not to assign penalty points in the matter.

The Court of Appeals disagrees with Mr. Lempert's assertion that the 2012 Standard Penalty Guidelines must be followed. The Court affirms that the penalties in the published document are guidelines, are neither minimums nor maximums, and allow the Chief Steward or SOM reasonable latitude in assigning an appropriate penalty in accordance with the GCR. The Court of Appeals (COA) finds that it was within the powers of the Chief Steward to disqualify #77 (2012 GCR 5.12.2.C.1). The Court further finds that the SOM acted properly and fairly in their consideration of the protest and provided a definitive ruling on Mr. Lempert's petition.

DECISION

The Court of Appeals upholds the decision of the SOM in its entirety. Mr. Lempert provided no evidence to support his assertion that the CS imposed an incorrect penalty and that the SOM failed to provide a definitive ruling on his protest. Mr. Lempert's appeal is deemed not well founded and his appeal fee will be retained.

SOLO EVENTS BOARD

SOLO EVENTS BOARD | April 25, 2012

The Solo Events Board met by conference call April 25th. Attending were SEB members Dave Feighner, Bryan Nemy, Steve Hudson, Mike Simanyi, Erik Strelnieks, Richard Holden, and Dave Hardy; John Walsh, Todd Butler, and Brian McCarthy of the BOD; Doug Gill, Ryan Miles, and Howard Duncan of the National Staff. These minutes are presented in topical order rather than the order discussed.

Unless noted otherwise the effective date for all rule, class, and listing change proposals herein is 1/1/*2013*

Comments regarding items published herein should be directed via the website www.sebscca.com.

STOCK

- The SAC and SEB have reviewed the following items, and thank these members for their input:
  - # 7723, Porsche camber comments.
  - #7819, Camber allowance comments.

STREET TOURING

- The STAC and SEB have reviewed the following items, and thank these members for their input:
  - #7589 and #7674, Kia Rio 5. This car was classed in the April Fastrack under ST Tech Bulletin #7.

STREET PREPARED

- The following class change proposal is provided for member review and feedback (#7726):
  - Move from BSP to DSP: Mazda RX8
- The following rule change proposal is provided for member review and feedback (#7594):
  - Add new subsection 15.10.C.5 as follows:

    "*5. Cruise control systems may be removed in whole or in part. This does not permit modification to components interacting with the cruise control system, such as throttle bodies, etc.*"
- The SPAC is seeking input on possible changes to the aero rules in SP (re: #7317, #7358), and is requesting that members indicate their preference for one or the other of the following two options:
  - Option 1:

    Remove the fourth sentence, which currently reads "The intent of this allowance is to accommodate commonly available appearance kits, and replicas thereof, which have no significant aerodynamic function at Solo speeds" from 15.2.I. Note: This keeps current aero allowances, and removes the 'intent' wording.
  - Option 2:

    Change 15.2.B to:

    "Factory rub strips, emblems, mud flaps, *rear wings or rear spoilers* may be removed."

    Change 15.2.I to:

    "Addition of spoilers, splitters, rear wings, bumper covers, valances, side skirts, and non-functional scoops/vents is allowed provided that either:

    1. It is a production part which is standard or optional equipment on a vehicle listed on the same line in Appendix A.

    2. It is listed in the vehicle manufacturer's US accessory catalog for a vehicle listed on the same line in Appendix A for normal highway use. This does not allow for parts sold through a manufacturer's performance catalog (e.g., Ford Racing, HPD, MazdaSpeed, Mopar Performance, Mugen, NISMO, SPT, TRD, etc).

    Parts must be installed as directed by the manufacturer. Exact replicas (including weight) from alternate sources are also permitted."

    Note: This changes aero allowances to more closely match the intent statement in the current rules.
- The following rule change proposal is published here for member review and comment (#7852):
  - Add new subsection 15.2.A.1 as follows:

"*1. Hardware may be added to the steering system outside the passenger compartment to limit steering travel, provided it does not alter steering or suspension geometry and serves no other purpose.*"

- The SPAC and SEB have reviewed the following items, and thank these members for their input:
  - #7380, 15.2.Q omission. The SPAC notes that this was already covered in the March Fastrack.
  - #7738, ESP transmission mounts.

PREPARED

- The following rule change proposal has been provided by the PAC and is being published here for member review and comment (#7247):
  - Replace the fourth and fifth paragraphs under Prepared Class C in Appendix A with the following:

    "Naturally aspirated cars with US produced 4-cyl, 6-cyl, and 8-cyl engines manufactured by a particular corporation may be interchanged with any pushrod, DOHC, or SOHC engine offered by that corporation. Examples of swaps allowed include a Chevrolet engine would be allowed in a Pontiac, a "Coyote" 5.0L would be allowed in any year Mustang, an LS1 would be allowed in any year Camaro or Firebird, and a 3.7L DOHC V6 from a 2011+ Mustang would be allowed in any other Mustang. Alternate engines for a particular model must locate the bell housing to the block mounting surface in the same plane as the standard part. Vertical position of the longitudinal axis of the crankshaft shall remain the same as the original engine. Tolerance for both measurements is +/- 1/2 inch. Alternate material (aluminum) engine blocks may be used on U.S. produced 8-cyl engines. Any alternate engine block shall meet all other requirements of Section 17.

    Forced induction cars may not substitute the engine for any other nor may forced induction engines be swapped into cars that the combination was not offered."

  Also change the subsequent paragraph to read as follows:

    "Alternate iron or aluminum cylinder heads may be used on US-produced 4-cyl, 6-cyl, and 8-cyl engines. Any alternate cylinder head(s) used shall be of ***the same configuration (number of valves per cylinder and valve actuation method – pushrod or OHC) as the originals and shall be*** direct replacement type."

- The following class listing change proposal has been provided by the PAC and is published here for member review and comment (#7316):
  - Change the listing in EP for the Mazda RX4 to read as follows:

    RX4 (12A) (1974-78)

    Specified Displacement: 2292 cc

    Alt Spec: No peripheral port

    Sedans (non-turbo, 2WD, NOC)

  Also create a new listing for the Mazda RX4 in FP to read as follows:

    RX4 (13B) (1974-78)

    Specified Displacement: 2616 cc

    Alt Spec: No peripheral port

  Comment: The PAC feels the 13B rotary may be outside the engine power envelope of EP. There are no 13B-powered cars currently competing in EP and therefore this class change would not disenfranchise existing competitors.

- The PAC and SEB have reviewed the following items, and thank this member for the input:
  - #7252, CP engine comments. See the related proposal herein regarding item #7247.
  - #7728, GP wheel comments.

KART

- The KAC and SEB have reviewed the following items, and thank these members for their input:
  - #6961; FJ age clarification. The KAC appreciates the feedback, and has indicated that the rule is written as it is in order to allow FJ drivers to compete in the appropriate class at Nationals.
  - #6079, 6169, 6170, 6309, 6436, 6440, 6451, 6489, 6775, 6788, 7077, 7103, 7106, 7136, 7146, 7298; FJ spec motor proposal feedback. The KAC and SEB are continuing to look at issues and alternatives for motors in the FJ classes.
  - #7839; F125 engine performance.
  - #7304; tire clarification. This subject was covered in the March Fastrack, in response to item #7125.

NOT RECOMMENDED

Stock

- #7667; C5 Z06 classification. The SAC believes the C5 Z06 fits the competitive balance of the current SS class.
- #7780, Fiat 500 classing. The base Fiat 500 falls outside the height vs. track width requirements as published in Section 3.1 and as such is not legal for stock class competition.

Street Prepared

- #7314, crank pulley installation. Per the SPAC, such machine work on the block is not in the spirit of the SP rules, and would be a violation of 15.1.B.
- #7580, Datsun 2000 roadster. The SPAC has previously reviewed similar proposals #2407 and #5423, and does not recommend reclassing these vehicles as requested.
- #7614, Mustang V6. Per the SPAC, the car is believed to have more competitive potential in ESP than in DSP.

TECH BULLETINS

General

1. The following wording is added as a new second paragraph to Section 7.4, in order to clarify the issue of provisional reruns and codify long-standing existing practice:

   "If the Chief Steward or designated representative awards a competitor a provisional rerun it should be taken as soon as practical, subject to the five minute rule above, and the discretion of the Chief Steward. Chief Steward should notify the competitor which of their runs is considered provisional."

Stock

2. Per the SAC, the provisions of 13.2.A do not allow the replacement of steering wheels. Those allowances are covered in 13.2.F which specifically states that steering wheels with integral airbags may not be changed. Alternate or additional steering wheel wrapping material would be allowed under the provisions of 13.2.A. (#7803)

3. The following new listings, effective immediately upon publication, have been recommended by the SAC and approved by the SEB:

Hyundai Genesis Coupe (4-cyl Turbo)(2013)	DS (#7832)
Hyundai Genesis Coupe (V6)(2013)	FS (#7832)
Fiat 500 Abarth (2013)	GS

   Note: New information concerning rollover potential has been received allowing the Abarth version of the Fiat 500 to be classed.

4. Per the SAC, the Hyundai Genesis Coupe listing in GS is clarified to read as follows:

   Hyundai Genesis Coupe (4-cyl Turbo)(2010-2012)

Street Touring

5. The following new listing, effective immediately upon publication, has been recommended by the STAC and approved by the SEB:

   Volkswagen Rabbit, Golf, GTI, Cabrio (1974-92) STC

Street Prepared

6. The replacement of an OE sunroof is covered by the clarification under SUNROOF in the Street Prepared section of Appendix F, on page 273 of the Solo Rules. (#7436). This wording will be added into Section 15.2 for 2013.

7. The plastic "insulator" (heat shield) and "air intake bracket" of the stock air cleaner system on a 3rd-generation MX5 may be removed, under the allowances of 15.10.C.1 and 15.10.E. Since these items provide mounting support for the ECU, when they are removed the ECU may be mounted to the bottom of a compliant airbox using the stock brackets/fasteners. (#7399)

8. The following new listings, effective immediately upon publication, have been recommended by the SPAC and approved by the SEB:

Acura TSX	DSP (#7387)
Lotus Evora	SSP (#7713)

9. Per the SPAC, the listing for the BMW 5 series models in ESP is clarified to read as follows (#7421):

   528, 530, & 533 (*n/a*)

Prepared

10. Per the PAC, change the Minimum Weight Calculation example listed in Section 9.b of Appendix A for XP to read as follows:

"Example: weight for a rear wheel drive ***vehicle with a 2000cc turbocharged engine located behind the driver is 1200 + ((2.0 x 1.4) x (200+20)) = 1,816 lbs."***

11. Per the PAC, add under "BODYWORK AND STRUCTURE" in Prepared Class X, in Appendix A, as follows:

    "Non-OE replacement bodies are allowable in XP for the Factory Five Roadster, Factory Five Challenge Car and Superformance MKIII. Replacement bodies must not confuse the identity of the vehicle."

    Comment: This clarification replaces a similar Tech Bulletin published in the February 2012 Fastrack.

12. Revise Appendix A, Prepared Class F (FP) Weight Calculation Example to read as follows (#7465):

    "Subaru STI (2.5L) running 11" wheel width
    Actual displacement (before overbore): 2457cc
    *The formula would be: 0.75 (piston engine) + **0.450** (forced induction) + **0.100** (AWD) = **1.3** (total weight factor).*
    Calculated weight: 1.3 x 2457 = 3195 lbs (exceeds maximum limit).

    ***2700** lbs (maximum calculated weight) + 100 lbs (wheel width over 10" weight adjustment) = **2800** lbs (total competition weight)."*

    Comment: The revised Weight Calculation Example correctly utilizes weight formula changes instituted in the 2012 Solo Rules.

13. Per the PAC, the following updated listing in CP is effective immediately upon publication (#7666):

    Mustang *(S197 chassis, non-supercharged)* (2005-*2013*)

<u>Kart</u>

14. The KAC and SEB support the allowance at the Regional level of electric karts, provided applicable safety requirements are met (#7531).

RALLYCROSS BOARD

RALLYCROSS BOARD MINUTES | May 2, 2012

The RallyCross Board (RXB) met via conference call May 2. Attending were Ken Cashion, Chairman, Bob Ricker, Brent Blakely, Karl Sealander, Warren Elliott, Stephen Hyatt and Ron Foley. Also in attendance were Stephen Harris, Todd Butler, and Richard Patullo, BoD liaisons, and Howard Duncan and Brian Harmer from the National office.

The Secretary acknowledges that these minutes may not be in chronological order.

Committee Reports

1. RallyCross Safety Committee (Bob Ricker): Bob Ricker received the Solo Safety Steward Training presentation, which he will merge into a RallyCross Safety Steward Training presentation. It should be available for use within a month. No incident reports have been received in the past month. Ken Cashion requested the release of a Safety Bulletin stressing when and how to submit an incident report and that it be combined with a rerelease of the Safety Bulletin of 2/10/11.

2. RallyCross Rules Committee (Warren Elliott): The proposed Tuner Category rules were distributed to the RXB prior to the meeting. Discussion of the proposal resulted in a request from the RXB that the committee make some revisions to it. It should be completed prior to the next RXB meeting. The committee will continue to find a better solution for highlighting the mandatory sections of the RallyCross Rules. No submissions or requests for clarification have been received within the past month. Any received in the future will be posted at the RallyCross forums.

3. National Championship Committee (Brent Blakely): Planning for the National Championship is on schedule with assigning key worker positions as one of the next planning items. Brian Harmer expects to open registration for the event by June 1. The National Supplemental Regulations were prepared and presented to the RXB. Recommended changes are outlined below in the Divisional Steward Liaison section.

4. Marketing Committee (Ron Foley): The Committee wants to find good RallyCross video to put on the website that doesn't have music copyright issues. The old Facebook page will be closed down once its users have all been migrated to the new Facebook page. Ron Foley met with the publisher of Grassroots Motorsports and discussed a possible series of RallyCross articles in that publication. The RXB would like better coverage in SportCar with more content and information.

5. Divisional Steward Liaison (Stephen Hyatt): The last Stewards call was well attended and enthusiastic. Much of the discussion centered on the National supplemental regulations. The RXB discussed the issues raised by the Divisional RallyCross Stewards (DRXS) and made the following adjustments and points regarding the supplemental regulations: DNF and DNS are the same penalty of the slowest time plus 10 seconds; debeading rule stays as written; additional language to define that timing be triggered by the vehicle being timed; replace the word "vehicles" with "drivers" under Run Groups and Run Order, #4. A question was raised by the DRXS regarding the availability of online sanction applications; Howard Duncan indicated that online sanctioning should be available by midsummer. Stephen Hyatt will continue to work on a volunteer incentive program in conjunction with Ron Foley and the Marketing Committee.

6. Forum Activity: Little activity for now.

Old Business

1. Committee composition/Recruitment (all Committee chairmen): Ken Cashion stressed that the committee chairmen continue to search for new recruits for committee involvement.

2. New Divisional Steward Orientation: After some discussion, the RXB is in consensus that the best method of steward training is for the current stewards to train new stewards and that the most effective manner to do this would be for each DRXS to choose a deputy steward. Action item: Each RXB member will send a letter to his respective assigned steward(s) requesting that he choose an individual who could serve as his deputy/backup steward.

3. Growth discussion: Tabled until next RXB meeting.

Next meeting: June 6, 2012

Submitted by Karl Sealander, RXB Secretary

ROAD RALLY BOARD

ROAD RALLY BOARD MINUTES | April 3, 2012

The RoadRally Board met via conference call on April 3, 2012.

In attendance: Jim Wakemen, Jeanne English, Rich Bireta, Clarence Westberg, Sasha Lanz, Charles Hanson; Deena Rowland and Howard Duncan from National Office; Bob Lybarger and Steve Harris, BOD Liaisons; not in attendance: Eva Ames.

The meeting was called to order at 7:32 pm CST by Chairman Jim Wakemen.

1. March Meeting Minutes were approved.

2. 2012 Rally Liaison updates:

March 9-10, NTR/NCR Desert Skies, Desert Sands / Jeanne English
June 2, NCR Steel Haul / Jeanne English
June 23-24, NTCGR National Road, International Road / Jeanne English
August 25-26, 2 Day NTR Western Virginia National Tour / Rich Bireta
September 15-16, NTR/NCR Oktoberally, Badger Trails / Clarence Westberg
October 6-7, NTR/NCGTA Catoctin Monte, Lobster Traps / Jim Wakemen
Oct 19, 20, 21 - USRRC Detroit

Desert Skies - Hanson reported that one FZ did not have enough room for cars, contestants liked the rallies, some administrative problems. Steel Haul - sanction received, nothing to report. Indy - did pre-check for National, went well. Western VA Tour, Oktoberally, and DC rallies - nothing to report. USRRC – date change granted; Hanson will check with committee about getting out a press release.

3. RRB/National Events Committee – Rich posted a proposal for a National rally committee; there was discussion about whether or not the committee should be RRB members only or bring in non-RRB members – for now, RRB members only; Jeanne, Rich, and Clarence will be on the committee, chairman to be determined. Motion (English/Bireta): establish a National Events Committee to handle the tasks relating to administrating and developing the National Road Rally Championship Series and National events (full proposal posted in the RRB Dropbox); motion approved.

4. Convention Recap: Rich – great to meet people, disappointed in lack of time the RRB actually met; Clarence – concurs with Rich; Jim – meeting with the REs was worthwhile; we should have been better prepared for our meeting with the BOD, perhaps planning ahead with email between us; Howard – would it be better if the RE meeting had all programs present, with each having about a 10 minute presentation? what about Thursday morning? Sunday morning?

5. SCCA website: "What Can I Do With My Car?" still being worked on to have Rally be an option; also still working on a place to post standings.

6. Concerns Tracker: Jim tried to talk to Colan Arnold at the convention about getting space on the SCCA website, but was not very successful; Jim will send Howard an email summarizing what is needed.

7. 2012 Photo Contest: Same as above; Jim will send Howard an email summarizing what is needed.

8. NORPAC Div Steward: Jeanne - nothing yet.

9. RRR printing: Rick Beattie has found a photo for the cover; Jim will send it to Deena so printing can be done.

10. How to grow Regional programs/Road Rally Participation Study: Rich is the author of the Rally Participation Study. Comments: in some regions, it shows how fragile the program is; in other regions, even though they may have fewer events it's not a problem because they have a good rally history; regions most likely to grow are those with only one or two events; some areas have robust non-SCCA clubs that do not want to be part of SCCA; we need to reach out one-on-one to these clubs, find out what the needs are to entice these independent people/clubs. The RRB needs to come up with ideas on how we think SCCA can be improved to grow regional programs, such as restructuring the Weekend Membership program as it relates to rally, finding out what the barriers are to joining; tiered membership may be a possibility. Clarence – SCCA needs to have something better to offer, such as insurance, than other clubs have. We need to make our events more fun; we need to look at the product that people want and make more desirable. Eva will post the Road Rally Participation Study to the SCCA Forum.

Sasha come up with a proposal of goals and responsibilities for a committee to grow regional programs (similar to Rich's proposal for the National Events committee).

11. New Business: Sasha is forming a committee with members of the other competition boards to work on issues common to all, two members have already been appointed. The first project is working on WM data (Sasha doing rally); he asked the

committee to go over WM data for Solo and Rallycross; so far, there is an increase of about 20% in names/emails that can eventually be used for eblasts about upcoming events.

Executive session minutes posted on the RRB Dropbox.

Respectfully submitted, Jeanne English, secretary

QUICK LINKS

The following items have been removed from regular inclusion in FasTrack News and can be found on SCCA's Web site at the following links:

CLUB RACING

Runoffs Event page: http://www.scca.com/runoffs
Accredited Driver Licensing Schools: http://www.scca.com/clubracing/content.cfm?cid=50864
Forms: http://www.scca.com/downloads/#club
Technical Forms: http://www.scca.com/clubracing/content.cfm?cid=44472
General Competition Rules (GCR): http://www.scca.com/clubracing/content.cfm?cid=44472

SOLO

40th Tire Rack SCCA Solo National Championships: http://www.scca.com/solonationals
Forms: http://www.scca.com/downloads/#solo
Rulebook: http://www.scca.com/downloads/#solo

RALLY

Forms: http://www.scca.com/downloads/
Rulebooks: http://www.scca.com/downloads/

SCCA NATIONAL CONVENTION

Event page: http://www.scca.com/events/index.cfm?eid=3263

EVENT CALENDAR: http://www.scca.com/events/

Fastrack news official SCCA member notification

EFFECTIVE FIRST DAY OF THE MONTH UNLESS OTHERWISE NOTED July 2012

CONTENTS

BOARD OF DIRECTORS	**1**
CLUB RACING	**33**
CRB Minutes	33
Technical Bulletin	37
Court of Appeals	41
Time Trials Admin. Council	42
SOLO	**43**
SEB Minutes	43
RALLY	**50**
RallyCross	50
RoadRally	52
LINKS	**53**

BOARD OF DIRECTORS

SCCA Board of Directors Minutes | May 31 - June 2, 2012

The SCCA National Board of Directors met at the National Office in Topeka, KS on Thursday, May 31, Friday, June 1 and Saturday, June 2.

The following directors participated: Jerry Wannarka, Chairman, Lisa Noble, Vice-Chairman, Dick Patullo, John Walsh, Bill Kephart, Todd Butler, Secretary, Bob Lybarger, Phil Creighton, R. David Jones, Robin Langlotz, Steve Harris and Brian McCarthy. Michael Lewis, Treasurer, participated via conference call.

The following SCCA, Inc. staff participated in the meeting: Jeff Dahnert, President and CEO, Richard Ehret, Vice President Finance; Howard Duncan, Vice President Rally/Solo & Special Projects; Terry Ozment, Vice President Club Racing; Eric Prill, Vice President Marketing and Communications; Colan Arnold, Vice President Member & Region Services, Pete Lyon, Risk Management, Aimee Thoennes, Executive Assistant and Doug Gill, General Manager, Technical Services.

The following guests participated: Jim Wheeler, CRB Chairman, Erik Skirmants, President of SCCA Enterprises, James Hilbert and Christel LeSeur, Mize Houser & Co., and Pasquale Trozzolo, Angelo Trozzolo and Jeff Madden, Trozzolo Communications Group.

The secretary acknowledges that these minutes may not appear in chronological order and that all participants were not present for the entire meeting.

The meeting was called to order by Chairman Wannarka.

With the decline in membership and competition entries, the Trozzolo Marketing Group was hired to conduct an assessment of the SCCA brand. They reported on the first phase of this effort which suggested the need to address some internal issues to enhance the health of the Club before conducting an outside recruiting program. The Group requested Board consensus with the direction that they were going with their assessment, and Board support for going the next step which will be to assemble suggestions for addressing these internal improvements. The Board accepted their status report and authorized them to proceed with the next step. Their proposed actions report will be provided to the Board by late summer.

> **MOTION** to approve February face to face and March conference call minutes. Creighton/Lybarger. **PASSED**. Lewis absent.

RISK MANAGEMENT/LITIGATION REPORT
Lyon gave updates on the pending, open and potential litigation. No action required by Board.

Staff reviewing opportunities for co-sanctioning and co-scheduling special “festival” events. Lyon reviewing operations manual for language updates to support said events. He is currently investigating different risk profiles and scenarios. Lyon to prepare report for review at next Board meeting.

MARKETING/COMMUNICATIONS REPORT
Prill addressed sponsor contract extensions as well as new marketing proposals. Staff is working on incentives to promote B-Spec racing as well as running B-Spec as subset of SSC at Runoffs.

SuperTour return events were up in entry count. Board and Staff agreed that the goal was to lock in the SuperTour dates as early as possible for adequate planning by competitors and Regions. This will also allow Regions appropriate time to promote these special events.

Prill presented a summary of contingency programs. The total offering in value to SCCA competitors was in excess of $19 million with actual payout of $2.6 million in cash and product. Staff will be working on an enhancing communication to competitors

(Club Racing Solo, and Rally) about contingency programs to increase knowledge of and accessibility to these benefits.

A website platform is being built for use as a template by regions. Support and hosting to be offered to Regions and Divisions.

SCCA ENTERPRISES
Erik Skirmants, President, SCCA Enterprises reported year to date activities and budget.

Skirmants advised of the plan for SCCA, Inc. to process payroll and accounting effective July 1 in a manner similar to the service provided to SCCA Pro Racing.

Discussion ensued regarding the need for a more active Enterprises Board in the coming year to support Skirmants and his team.

> **MOTION**: to appoint Chris Funk as Interim Chairman of SCCA Enterprises Board of Directors. Jones/Lybarger. Not present: Lewis. **PASSED unanimously**.
>
> **MOTION**: To appoint Stephen Pence to the SCCA Enterprises Board. Jones/Langlotz. Not present: Lewis. **PASSED unanimously**.

Skirmants will be submitting more candidates for review at the BoD's December meeting.

The Board thanked Skirmants for his efforts at SCCA Enterprises noting the challenges following the loss of Chairman, Andy Porterfield, earlier this year.

FINANCE REPORT
Ehret reported that a clean audit report was received with no deficiencies noted. James Hilbert and Christel LeSeur of Mize Houser presented the consolidated Audit report. Hilbert stated that the Finance Department has done an exceptional job in preparing the accounting records to allow for an efficient audit. The financial statements are operationally sound and in good shape, there were no adjusting entries. Hilbert thanked the Board and the Staff for the opportunity to serve. The audit team concurred with the plan to transfer the accounting functions at Enterprises to the Finance Department at the Club Office.

> **MOTION**: To accept audit report of 2011 as presented. Lewis/Kephart. **PASSED unanimously**.

Finance documents for the year to date 2012 were reviewed and considered to be in compliance with the Board direction.

The current insurance program is due for re-evaluation for the 2013 season. An Insurance Committee to assist with the new RFP preparation will be formed by the President. It is his intent to get the proposal developed and in the field in time to provide recommendations to the Board by this Fall. This will permit a Board decision at its October meeting.

Pro Racing is on track to have a solid year.

RALLY AND SOLO REPORTS
Howard Duncan reported end of 1st quarter participation results. Solo has been successful with online streaming of events and will continue to refine the process for use throughout the season. Duncan noted that Heyward Wagner was instrumental in the process.

It is the intent of the SEB to skip their traditional mid-summer meeting in favor of teleconference.

RoadRally is less than 1% of SCCA population and struggling to create a national program. The Regional Development Committee, headed by Rich Bireta, is a positive step. It is a great legacy program, but unlikely to find substantial growth without significant changes. Duncan was directed not to expend additional resources towards RoadRally.

> **MOTION**: To appoint Al Hermans as MidWest Division Solo Steward effective immediately. Noble/Walsh. **PASSED unanimously**. Not present: Lewis.

FOUNDATION REPORT
Duncan discussed the current structure and progress of the Foundation BoD.

> **MOTION**: To appoint Arnie Coleman to the Foundation board. Kephart/Langlotz. **PASSED unanimously.**
>
> **MOTION:** At the request of the Foundation Board, change the Foundation Bylaws to allow 3 to 7 members instead of the current wording allowing 3 to 5 members.. Langlotz/Jones. **PASSED unanimously**.

LIAISON REPORTS

SEB – McCarthy/Walsh
Tire issues dominate most calls and working through SEB request letters. The inclusion of the new Road Tire Classes has been a success. SEB looks to staff for more resources/kits/materials etc.

Stewards – Creighton/Langlotz
Discussion on the Stewards program and the progress they have made.

MEMBERSHIP/REGION SERVICES REPORT

Arnold presented Tiered Membership Product Program with a goal to improve retention. Issue is losing members within first 3 years of membership…need to make it more affordable and encourage participation. A review of the potential region impact and a worst case analysis, it was agreed to table the tiered membership.

The Board expressed their desire for a one page handout on membership rates and programs to give to their region leaders. Arnold will distribute current document to all Directors and remind leaders of its availability online. Wannarka thanked Arnold for the addition of the projected timelines on projects he presented at the meeting.

Arnold presented an update on the Multi Year License Programs and Auto Renewal. Both programs have seen approximately 1000 subscribers.

Wannarka thanked the Member Services Department for their great customer service and quick turnaround in response to member inquiries and needs.

Arnold reported that the Data Collection project is behind as there are a few divisions who have not provided the required information. Data comes from the current timing and scoring systems but will need to shift to pull data from updated registration systems at some point. The purpose of the data collection project is to allow better targeting of email to involved members and competitors members of programs, rules changes, etc., that impact their participation. Participation data should be completed by end of 2012.

Arnold spoke about possible uses of new technology opportunities to improve the member experience. The Board was in agreement that they wanted staff to pursue these options across all programs. Arnold to report at year end.

TECH DEPT REPORT

Doug Gill reported that Snell requested a meeting with Club representatives in Topeka regarding the 2015 helmet standards.

Update on B-Spec specifications for multiple manufacturers.

General discussion around safety certification agencies, acceptance of MSA certification and use of carbon fiber.

PLANNING COMMITTEE REPORT

Kephart gave a formal update on the status of the 2012 Majors pilot. There has been great out of Division participation and driver feedback has been very positive. The focus of the Majors is on the driver experience. A Program Manager, Gayle Lorenz, has been hired for the Majors and has been actively involved in recent events. One of the lessons learned is resource load and staff support required is significant. A single series chief steward has been beneficial. This will be the model going forward.

Kephart presented the plan for 2013 was to 1) identify Majors zones; 2) Identify Rollout plan; 3) Identify targeted Regions/Events and 4) Announce plans for National Rollout.

Walsh presented the findings of the zones sub-committee. The 2013 Majors Zones were identified as Western (SP, NP) , Central (SW, MW, RM, CenDiv) and Eastern (SE, NE, GL).

Financial implications of proposed 2013 Majors rollout reviewed. Two new staff positions identified: Individual to assist in Club Racing and an additional PR/Marketing position. Both will have primary emphasis on Majors implementation while also assisting with current department workloads. There is a need for three field staff positions known as Zone Program Managers. The budget for 2012 Majors staffing was reviewed. Budget for 2013 Majors will be incorporated into 2013 SCCA budget planning.

> **MOTION**: Change wording in GCR Section 3.1.1.e and 3.1.4 to support the rollout of the Majors to additional zones in 2013 and beyond. Kephart/Harris**. PASSED.**

Majors portfolio of events includes Invitationals (top 10), Showcase (Bonus Nationals, etc) and Festival. Plan for 2013 would be 18 invitationals and 3 festivals (one in each zone). Festivals would be marque events. Vintage, Spec Festivals (i.e. FF, FV anniversaries) could also include non-SCCA classes/groups, etc.

The Board recognized the level of effort and enthusiasm contributed by the current and past Planning Committee Members and SCCA National Staff to develop and implement a fresh new product to elevate competition in SCCA Club Racing.

> **MOTION:** Approve the 2013 rollout of the Majors as presented in 3 zones. Kephart/Lewis. **PASSED unanimously**.
>
> **MOTION**: Approve additional funding for 2012 of not more than $85,000 to support the Majors rollout. Kephart/Lewis. **PASSED unanimously**.

A subcommittee has been created to address the barriers to entry in SCCA i.e. car requirements, medical requirements, fees, etc. The subcommittee is tasked to explore the possibility of assessing different risk profiles for different events. Patullo to chair this subcommittee and will coordinate with the Planning Committee and CRB.

STRATEGIC PLAN

A subcommittee of the Planning Committee has been assigned to update the Strategic and Tactical Plans and keep it current/ relevant. Steve Harris to chair this subcommittee and to coordinate with President Jeff Dahnert. The update will be provided in the Board briefing book prior to the next board meeting.

CLUB RACING REPORT

Discussion regarding the Chairman of the Stewards and the timing of the appointment.

> **MOTION**: Change the appointment of the Chairman of the Stewards in 5.3 of the Operations Manual to the October Board meeting in lieu of the August Board meeting. Langlotz/Harris **PASSED unanimously.**

Tom Start has stepped down from the CRB which leaves a vacancy.

> **MOTION:** To appoint Tony Ave to the CRB effective immediately. Butler/McCarthy**. PASSED unanimously**. Lewis not present.

There was discussion of the current skillsets on the CRB, the additional workload and potential projects that the CRB would like to undertake. It should be noted that the CRB is now receiving between 100 and 200 letters a month requesting changes to rules or the GCR.

> **MOTION:** To change Operations Manual Section 5.2 first sentence to read: "Appointment: The Board of Directors shall appoint annually in December a Chairman and two to *seven* additional members to the Club Racing Board, those selected shall be SCCA members subject to annual appointment by the Board of Directors." Butler/Patullo**. PASSED unanimously**. Lewis not present.

John Blanchard served as AS Committee chairman for 9 years and recently retired. The Board of Directors wishes to thank John for his efforts and service to the SCCA.

Jim Wheeler, CRB Chairman discussed two oversight issues that will be handled as race memos

1) Previous BoD approval for MZR engine for S2000 predicated on some testing. ECU specified and flywheel weight was incorrect. Asking BoD approval to publish Race Memo to accept a newly specified ECU and corrected flywheel weight. BoD agreed that the race memo was satisfactory and no vote required.
2) Report formatting in the briefing book caused this to be missed in the minutes recording. It was approved as a package with implementation for 2012. T3 Ford Mustang race springs and weight. BoD agreed that the race memo was satisfactory and no vote required.

Discussion over CRB proposal for STL to be a standalone championship class at the Runoffs. It was noted that the Board had previously approved STL as a provisional national class and to run as STU at the 2012 Runoffs. It is the Board's intent to maintain consistency with the decisions previously made.

> **MOTION:** To take no action regarding addition of STL as a National Championship class for the 2012 Runoffs GCR #8256. Patullo/Butler. **PASSED.** McCarthy abstained.

A proposal to recognize STL as a sub-group special podium recognition at the Runoffs was supported by the Board. This action would be consistent with similar treatment for B-Spec in SSC.

Wheeler presented draft GTAC overview of GT ad-hoc committee. CRB will be discussing in more detail and will present a recommendation for GT to the Board at a later date.

> **MOTION:** To accept the recommendation of adding to 9.3.29.A "*If no current National champion is using the numeral "1," then a past national champion may use the numeral "1.""* for #7627. Patullo/Butler. In favor:: Harris, Creighton,

Patullo, Noble, Wannarka, Butler. Opposed: Lewis, Jones, McCarthy, Lybarger, Langlotz, Kephart, Walsh. **FAILED.**

MOTION: To Change Appendix C, GCR 2.6.G: G. A 15 year-old must complete his first SCCA driver school in a car *not classed in GT1, GT2, FA, FB, FS, ITR, STO, ASR, CSR, DSR, or T1.* ~~from one of the following classes: FV, FST, FF, SRF, SM, HP, T3, SSB, SSC, ITA, ITB or ITC.~~ Upon successful completion of the first school, any car may be used thereafter~~, or a regional-only class car of similar performance as determined by the Chief Steward~~. Patullo/Butler. **PASSED unanimously.**

MOTION: To adopt the changes recommended for GCR 2.4-2.6 and 8.4.1. Patullo/Butler. **PASSED unanimously.**

MOTION: To add to the GCR section *2.7. CRB OFFICIAL REVIEW. The license of any official may be suspended by the CRB, if in their view his actions are contrary to the best interest of the SCCA. A license may be suspended for a period of time specified by the CRB, or it may be revoked permanently. License revocation by the CRB may be appealed to the SCCA Board of Directors.* Patullo/Butler. In favor: Jones, Creighton, McCarthy, Langlotz, Kephart, Walsh, Patullo, Noble, Butler. Opposed: Wannarka, Harris, Lybarger, Lewis. **PASSED.**

A recommendation of Sports Racing and FE/FM Re-alignment was presented.

MOTION: The Board of Directors direct the CRB to further refine the SR1/SR2 recommendations for potential 2014 rule change to include classes CSR, DSR and S2. Patullo/Butler. In favor: Patullo, Butler, Noble. Opposed: Walsh, Kephart, Langlotz, Lybarger, McCarthy, Creighton, Harris, Jones, Wannarka. Not Present: Lewis. **FAILED.**

MOTION: To combine DSR and CSR into one class for 2014. Patullo/Langlotz. In favor: Noble, Wannarka, Butler, Harris, Creighton, McCarthy, Lybarger, Langlotz, Kephart, Walsh, Patullo. Abstained: Jones. Not present: Lewis**.** **PASSED unanimously.**

MOTION: To make no changes for FE or FM or SRF with respect to class management. Patullo/Harris. Abstained: Jones, Walsh. Not present: Lewis. **PASSED unanimously.**

MOTION: To approve items 7657, 7509, 7462, 7402, 7459, 3282, 7154, 7376 and 7625 effective 1/1/2013. Patullo/Butler. Not present: Lewis. **PASSED unanimously.**

Wheeler presented the plan: National Class Management – Touring Consolidation for 2013.

MOTION: to approve national class management plan as presented for Touring Consolidation for 2013. Patullo/Butler. Not present: Lewis. **PASSED unanimously**.

The CRB has developed a proposal for consolidation of the Touring and Showroom Stock classes for 2013. There will be 4 Touring classes with all Showroom Stock cars located within a Touring class, based on their performance capability. A majoring of the Touring rules will be retained, but, at the top of the description of each Class below, there may be a set of philosophical proposed changes.

The Board thanked Wheeler and the CRB for their hard work on the class management and re-alignment plans.

Ozment presented a proposal to alter the payment of sanction fees and insurance to post event. The purpose is to simplify processing and ease cash flow and reporting for regions.

MOTION: Modify GCR section 3.3.2.B to read: Appropriate sanction fee to be paid within 14 days of the completion of the event with the event insurance audit.

Modify Appendix B.2.1.**Event related fees**
A. Sanction Fee
The sanction fee listed on the sanction application must be paid within **14 days of the completion of the event**.
H. Insurance Fee
The appropriate premium must be sent to the SCCA for mandatory event insurance coverage **within 14 days of the completion of the event**. The fee schedule is available from the SCCA National Office, or on the SCCA website. Kephart/McCarthy. **PASSED unanimously**.

There was a GCR Review regarding conduct of events as it relates to the Majors. There are items that could be changed to allow more flexibility for Divisions/Regions on running races. Review of GCR event conduct was restricted to things that were Majors related. Board agreed that it needed to follow process of GCR committee to vet and recommendation to CRB which would come back for Board approval.

MOTION: in an effort to empower the Regions to have more flexibility in event scheduling, the BoD recommends to the Club Racing Board that the following GCR items be considered for implementation for 2013. Langlotz/Butler**.** **PASSED unanimously**.

The Runoffs Financial Event Model was reviewed. The current model is that the track is the promoter and SCCA puts on the event. Current Runoffs contract under this model runs through 2013.

Multiple financial options are available for consideration and will be considered for the next
Runoffs RFP. Discussion ensued over advisability of rotating the Runoffs location more frequently. Goal of these changes would be to optimize the product, allow more track options, flexibility for more frequent venue changes, and engage more participants nationwide. Staff will continue work to identify critical factors involved in change options. Tracks will be contacted in the Fall for their interest in the Runoffs beginning in 2014.

The Board concurred with the creation of a subcommittee to be appointed by the Chairman to meet face to face with the Staff August 18-19 in Kansas City to provide direction in regards to the Runoffs RFP.

MOTION to adjourn. Lybarger/Langlotz. **PASSED unanimously**.

Meeting Adjourned.

APPENDIX: May 31 – June 2, 2012

MOTION: To adopt the changes recommended for GCR 2.4-2.6 and 8.4.1. Patullo/Butler. **PASSED**.

2.4. - 2.6. Modification

~~2.4. EXECUTIVE STEWARD'S DRIVER OR OFFICIAL REVIEW~~

~~A driver's or official's Divisional Executive Steward may name and convene a committee to review the individual's conduct, car legality, competition record, and / or other matters. The committee has the authority to invoke penalties as specified in Section 7, and may also suspend any license, or may return a driver to an SCCA Drivers' School. The driver or official has the right to appeal the decision as specified in 8.4.~~

~~2.5. CRB'S OFFICIAL REVIEW~~

~~The license of any official may be suspended by the CRB, if in their view his actions are contrary to the best interest of the SCCA. A license may be suspended for a period of time specified by the CRB, or it may be revoked permanently. License revocation by the CRB may be appealed to the SCCA Board of Directors.~~

1.6. ~~OFFICIAL'S DOWNGRADE OR LOSS OF LICENSE~~

~~2.6.1. The license of any official may be downgraded at any time for non- or under-participation, conduct violating the GCR, actions contrary to the best interest of the SCCA, or inability to perform satisfactorily at the current license grade.~~
~~2.6.2. The license of any official may not be renewed for non-or under-participation, conduct violating the GCR, or actions contrary to the best interest of the SCCA.~~

2.4. DIVISIONAL ADMINISTRATOR AND EXECUTIVE STEWARD LICENSING AUTHORITY AND MEMBER RIGHTS

2.4.1. Divisional Administrators and Executive Stewards manage licenses in their respective specialties for their Divisions. They may downgrade, refuse to upgrade, suspend, or not renew the license of any official for non- or under-participation, conduct violating the GCR, actions contrary to the best interests of the SCCA, or inability to perform satisfactorily at the current license grade.

2.4.2. Any official subject to a license action as described in Sections 2.4.1. may request a review of the license action.

A. Request:

1. Must be made to the official's Executive Steward in writing.
2. Must be made within ten days of the license action.

B. Review Management:

1. Non-steward Licenses - the member's Executive Steward.
2. Steward licenses - the Chairman of the Stewards' Program

C. Review Committee:

1. Will be established by the Executive Steward or the Chairman of the Stewards' Program according to Section 2.6.
2. Will be conducted in accordance with the Stewards' Manual guidelines.
3. May uphold, modify, or overturn the license action.

D. Appeal:
1. Parties have the right to appeal the decision of the Review Committee to the Court of Appeals, per Section 8.4.

2.5. EXECUTIVE STEWARD DRIVER AND OFFICIAL REVIEW

A Divisional Executive Steward may convene a Review Committee in compliance with Section 2.6 to review a driver or official's conduct, car legality, competition record, and/or other matters. The Review Committee may invoke penalties as specified in Section 7, suspend or change the grade of any license, and/or return a driver to an SCCA Drivers' School. The driver or official has the right to appeal the decision of the Review Committee to the Court of Appeals, as specified in Section 8.4.

2.6. REVIEW COMMITTEE MEMBERS CONFLICTS OF INTEREST

Members of review committees created under Sections 2.4. and 2.5. may not have any significant conflicts of interest or ties to any of the parties. Members will be subject to the restrictions of 2.2.4.C., and may not have any other significant conflicts of interest with any of the parties. Reviews will be conducted in accordance with the Stewards Manual guidelines.

8.4.1 Right to Appeal

Any participant or organization named as a party to a protest, a Chief Steward's RFA; *or any member named as a party in a Review Committee*, has the right to appeal a decision or penalty imposed upon him or it by the SOM or Review Committee. *The Chief Steward of an event has the right to appeal any decision or penalty imposed*.

MOTION: To approve the following. Patullo/Butler. Not present: Lewis. **PASSED.**

SRF
1. #7657 – (May Fastrack – Mike Davies on behalf of SCCA Enterprises) Rear/Tail minimum weights
Change Minimum Rear weight requirement in 9.1.9.C.5: Rear ~~30~~ *27* lbs.

GRAND TOURING
GT
#7509 – (April Fastrack – GT Committee) Add to 9.1.2.F.4.i.5.E
Direct injection is not permitted.

GTL
1. #7462 – (May Fastrack – Kyle Disque) Grill opening clarification
Add to GT-2, GT3, GTL rules: 9.1.2.F.4.h.6: *Radiator intake and brake openings may be covered with screen and/or taped as necessary to protect the radiator and/or regulate air flow.*

SUPER TOURING
ST
1. #7402 – (May Fastrack – Club Racing Board) Allow JDM and Euro Spec Engines
Create new section 9.1.4.G.2 by adding the following language: *Engines from vehicles not available in a car delivered in North America will be considered and approved on a case-by-case basis for use in ST. For an engine to be considered, a member must submit to the CRB a Vehicle Technical Specifications (VTS) sheet with all engine parameters filled out. Copies of the appropriate factory shop manual are also useful for this consideration. Any deviations from the STCS that will be required for installation (e.g., trans adapter plate, alternate intake manifold, etc) must be noted in the "Requested Non-Stock Allowances" section, otherwise they will not be allowed. Once this information is received and considered, any approved engines will be noted in a separate table within the STCS.*

STO
1. #7459 – (April Fastrack – Christopher Childs) Correct the Engine Displacement
– Panoz. Thank you for catching this. Please change displacement in STO, Panoz Esperante GTS, ~~5940~~ *5800*.

IMPROVED TOURING
ITB

1. #3282 – (May Fastrack – David Russell) Include LH-Jetronic 1.0 in the notes sectionRe-classify the Volvo 240 line from ITB to ITC:

~~ITB~~ ITC	Engine Type	Bore x Stroke(mm)/ Displ. (cc)	Valves IN & EX (mm)	Comp. Ratio	Wheel-base (inch)	Wheel Dia. (inch)	Gear Ratios	Brakes Std. (mm)	Weight (lbs)	Notes:
Volvo 242/244 2.0 (1975)	4 cyl SOHC	88.9 x 80.0 2127	(I) 44.0 (E) 35.0	8.7	104.0	15	3.13, 1.99, 1.36, 1.00, 0.80	(F) 262 vented Disc (R) 280 solid Disc	~~2780~~ *2570*	

~~ITB~~ *ITC*	Engine Type	Bore x Stroke(mm)/ Displ. (cc)	Valves IN & EX (mm)	Comp. Ratio	Wheel-base (inch)	Wheel Dia. (inch)	Gear Ratios	Brakes Std. (mm)	Weight (lbs)	Notes:
Volvo 240 2.3 *(83-~~95~~)* *(83-93)*	4 cyl SOHC	96.0 x 80.0 2320	(I) 44.0 (E) 35.0	10.3	104.3	15	4.03, 2.16, 1.37, 1.00, 0.80 or 4.03, 2.16, 1.37, 1.00, 0.82	(F) 262 vented Disc (R) 280 solid Disc	~~2780~~ *2735*	

~~ITB~~ ITC	Engine Type	Bore x Stroke(mm)/ Displ. (cc)	Valves IN & EX (mm)	Comp. Ratio	Wheel-base (inch)	Wheel Dia. (inch)	Gear Ratios	Brakes Std. (mm)	Weight (lbs)	Notes:
Volvo 242/244 2.1 (76-82)	4 cyl SOHC	92.0 x 80.0 2127	(I) 44.0 (E) 35.0	9.3	104.0	15	3.71, 2.16, 1.37, 1.00, 0.80	(F) 262 vented Disc (R) 280 solid Disc	~~2780~~ *2570*	Bosch CIS injection or LH-Jetronic Injection

PRODUCTION
ALL

1. #7154 – (April Fastrack – Chuck Mathis) Allow CIS fuel injection to be replaced with Digifant

Thank you for your request. Change 9.1.5.E.1.b.4, Car's permitted to utilize fuel injection, must use the stock manifold and throttle body. The throttle body bore size must remain stock. The throttle body can be ported and polished. The number of injection nozzles must remain the same as stock. The mounting position and injection point of the injection nozzle must be stock. ~~The stock type of fuel injection must be maintained (electronic, mechanical, Bosch CIS, etc.).~~ *Electronic **fuel injection** may be substituted for the **stock** type of fuel injection.* The fuel injection system is otherwise unrestricted.

Also, change 9.1.5.E.2.b.4, Fuel Injection: All inducted air must pass through the throttle body and be subject to control by the throttle butterfly. The stock throttle body casting/housing must be retained. The inside dimensions of the throttle body casting/housing and all dimensions of the throttle butterfly must remain stock. The throttle butterfly shaft must not be relocated. The outside diameter of the portion of the throttle butterfly shaft located in the throttle body bore must be no smaller than stock. The contour of the interface between the throttle butterfly shaft and the butterfly must remain stock. The throttle butterfly and any throttle butterfly to shaft screws/bolts can be attached to the throttle butterfly shaft by any means including welding or brazing. Holes or slots can be created in the throttle butterfly for purposes of idle adjustment only. The number of injectors must remain stock. The mounting position and injection point must be stock. ~~The original type of fuel injection must be maintained (electronic, mechanical, Bosch CIS, etc.).~~ *Electronic **fuel injection** may be substituted for the **stock** type of fuel injection.* In all other respects the fuel injection system is unrestricted.

SHOWROOM STOCK
B-Spec

1. #7376 – (April Fastrack – T-SS Committee) Track Specification

Remove track width column from the B-Spec specification line for all cars for simplicity.

SPEC MIATA
SM

1. #7625 – (April Fastrack – Club Racing Board) Recommended Rule Change Portion of Letter #6400 (Technical Bulletin)

Thank you for your letter. Add to 9.1.8.C.1.o.2: *Fan shroud and brackets may be modified for installation.*

Wheeler presented the plan: National Class Management – Touring Consolidation for 2013.

MOTION: to approve national class management plan for Touring Consolidation for 2013 shown below. Patullo/Butler. **PASSED**. Not present: Lewis.

CRB will continue to refine specifications and TBD specifics for October BoD approval.

The CRB has developed a proposal for consolidation of the Touring and Showroom Stock classes for 2013. There will be 4 Touring classes, with all Showroom Stock cars located within a Touring class, based on their performance capability. A majority of the Touring rules will be retained, but, at the top of the description of each Class below, there may be a set of philosophical proposed changes.

Class 1:
All Cars in class permitted the following changes:

- No Interiors
- Shocks Open; **After market Springs and sway bars assigned on a case-by-case basis**
- **Maximum 3.0** degrees of negative chamber is allowed on front and rear suspensions. Strut suspensions may de-camber wheels by the use of eccentric bushings, eccentric bolts (crash bolts) at the strut-to-spindle, and/or by use of slotted adjusters at the top of the strut mounting plate. If upper strut slotted plates are used, they shall be located on existing chassis structure, utilizing the manufacturer's original bolt holes and may not serve as reinforcement for that structure. On other forms of suspension, camber adjustment may be achieved by the use of shims and/or eccentric bushings.
- **OEM ECU only (Re-Flashing permitted)**
- Non-OEM Engine Cooler, Transmission Oil and Differential Cooler are permitted
- Parking brake assemblies may be removed
- Cars allowed to replace OEM upper and lower A-Arm bushings with polyurethane or Delrin bushings.

CLASS 1	**Bore x Stroke(mm)/ Displ. (cc)**	Wheelbase (mm)	**Max Wheel Size (inch)**	**Tire Size**	**Gear Ratios**	**Final Drive**	**Brakes (mm)**	**Weight (lbs)**	**Notes:**
Acura NSX (97-03)	93.0 x 78.0 3200	2530	16x7(F) 17x8.5(R)	215/45/16 245/40/17	3.07, 1.96, 1.43, 1.12, 0.91, 0.72	4.06	(F) 297 Disc (R) 302 Disc	3100	**Member to request re-classing car, required.**
BMW E92 M3 (08-*12*)	92.0 x 75.2 3999	2761	F:18x8.5 R:18x9.5	265/40	4.06, 2.37, 1.58, 1.19, 1.000, .87	3.85 or 3.15	F:360x30 R:350x24 or	3300	***StopTech Brake Kit permitted: 380x35mm 6-piston caliper Part# 83.160.6D00.XX (F) and 355x35mm 4-piston caliper Part# 83.160.0047.XX (R)*** ***Brembo Brake Kit permitted: 365x34mm (F) part # xxx 6-piston caliper and 345x28mm (R) part #xxxxxx 4-piston caliper*** ***Alcon Brake Kit permitted: 365x32mm (F) part # BKF9751ZG70L 6-piston caliper and 348x28 (R) 4-piston caliper (R) part # BKR9856B20L***
BMW M3 GTS (2010)	92.0/82.0 4361	2761	F:19x9 R:19x10	F:255/35 R:285/30	4.78, 3.06, 2.15, 1.68, 1.39, 1.20, 1.00	3.15	F:378x32 R:380x28	3400	***StopTech Brake Kit permitted: 380x35mm 6-piston caliper Part# 83.160.6D00.XX (F) and 355x35mm 4-piston caliper Part# 83.160.0047.XX (R)*** ***Brembo Brake Kit permitted: 365x34mm (F) part # xxx 6-piston caliper and 345x28mm (R) part #xxxxxx 4-piston caliper*** ***Alcon Brake Kit permitted: 365x32mm (F) part # BKF9751ZG70L 6-piston caliper and 348x28 (R) 4-piston caliper (R) part # BKR9856B20L***
Cadillac CTS-V (06-07)	101.68 x 92.0 5967	2880	18 x 9.5 (F&R)	295/35 max.	2.97, 2.07, 1.43, 1.00, 0.84, 0.56	3.73	(F) 355 Vented Dsc (R) 365 Vented Disc	3550	**~~GM Cooling Kit allowed (Engine Oil Cooler Kit PN 25534461, Trans. Cooler PN 25534462, Rear dif. cooler PN 25534463~~, Brake duct extension (through fog light) PN 25534464, Radiator kit PN 25534465, Fuel tank sender kit PN 25534466. A max of 275 tires on 9.5-inch wide wheels is allowed. This max. tire size supersedes TCS 9.1.10.D.7.b. ~~Front Spring (550lb) #25534467, Rear Spring (550lb) #25534468, Front Roll Bar (36mm) # 25534469,~~ Front Isolator #25534470, Rear Roll Bar (24mm) #25534471, Rear Isolator #25534472, F&R Links #25534473**
Chevrolet Camaro SS, 1LE (10-13)	103.3 x 92.0 6162	2853	*20x10 (F & R)*	295/35 (F & R)	3.01, 2.07, 1.43, 1.0, 0.84, 0.57	3.45	(F)355 x 32 Vented (R)365 x 28 Vented	**3600**	**1LE-SS Track Pack permitted. Tower Brace 22756880, oil-air separator 12653074, 57 mm flat plate restrictor required**
Chevrolet Camaro SS (98-02)	99.0 x 92.0 5666	2568	17 x 9 (F & R) 16x10(F) 16x11(R)	275/40/17	2.66, 1.78, 1.30, 1.00, 0.74, 0.50	3.42	(F) 300 Vented Disc (R) 302 Vented Disc	3280	35mm front sway bar & 31mm rear sway bar is permitted. Springs: (F) 550 lb/in (R) 130 lb/in

Chevrolet Corvette C-5 Incl. Fxd Cpe (98-04) Z06 (hardtop) (01-04)	99.0 x 92.0 5666	2655	18x10 (F) 18x11 (R)	315/35/18 (max) (F&R) Rear tires may protrude up to 1.0" with GM T1 Perf. Susp. pkg. Max. camber: (F) -3.5 (R) -2.5 with GM suspension pkg.	(C5): 2.66, 1.78, 1.30, 1.00, 0.74, 0.50 (Z06): 2.97, 2.07, 1.43, 1.00, 0.84, 0.56	3.42	(F) 325 Vented Disc (R) 305 Vented Disc May use two-piece steel rotors with aluminum hats up to 5% larger than 340/330; Any four piston calipers and brackets are permitted. Any brake caliper pistons are allowed; may use the Wilwood SL6R brake caliper.	3300	GM Motorsports T1 suspension pkg. (Part # 12480062) is permitted. Parts for Z06 upgrade: LS6 Engine Assy.: P/N 88894057, Engine components if using LS1 block: LS6 cylinder head: P/N 12560801, LS6 intake manifold: P/N 88890524 or 12480075, LS6 camshaft: P/N 12560950, LS6 valve springs: P/N 12565117, LS6 valve shims: P/N 12565118, Lifter valley cover: P/N 12568002, PCM: P/N 12200411, LH Exh manifold: P/N 12561255, RH Exh manifold: P/N 12561256. C-5 exhaust system may be modified to mate to Z06 exhaust manifolds. Cage attachments points may be on the frame. Floor may be modified to facilitate installation of cage mounting plates. Wrapping of tie-rod ends to shield heat is permitted. This max. tire supersedes TCS 9.1.10.D.7.b. C6 calipers permitted. Alternate wheel bearings SKF Part # BAR 5049C permitted. OEM or equivalent carbon fiber hood is allowed. ~~The stock exhaust manifolds may be replaced with any headers that connect to the catalytic converters or to the converter replacement pipes allowed in 9.1.10.D.1.h without other modification to the exhaust system. The header may replace the catalytic converter replacement pipes.~~ Entire parking brake assembly (including interior lever) may be removed. The A.I.R air pump system may be removed. **Flat plate restrictor XXXmm**
Chevrolet Corvette C6 Coupe (05-10) / Grand Sport (*10-12*)	101.68 x 92.0 5967 (LS2) 103.26 x 92.0 6162 (LS3)	2685	18 x 10 (F) 19 x 11 (R) or 18 x 11 (F) 19 x 13 (R)	315/35 max. (F&R) or 315/35 max (F) 345/35 max (R) Rear tires may protrude up to 1.0" with GM T1 Performance Suspension package. Max. camber: (F) -3.5 (R) -2.5 with GM T1 Performance Suspension package.	2.66, 1.78, 1.30, 1.00, 0.74, 0.50, or 2.97, 2.07, 1.43, 1.00, 0.71, 0.57	3.42	(F) 325 / 340 Vented Disc (R) 305 / 330 Vented Disc or (F) 355 x 32 Vented Disc (R) 340 x 26 Vented Disc or May use 2-pc steel rotors with alum. hats up to 5% larger than Z51 rotor. ---------- LS2 may use Grand Sport brake package. Any brake caliper pistons allowed. May use any four piston brake caliper and brackets with a 50 pound weight increase. Z06 brake calipers allowed.	LS2: *3180* LS3: **3400** Add 50 lbs. for larger wheels and/or tires	C6 T1 Suspension kit and Z51 option allowed. Floor may be modified to facilitate installation of cage mounting plates. The max. tire sizes supersede TCS 9.1.10.D.7.b. Removable roof panel shall be installed. The following parts are allowed: GM oil pan #12630477; GM radiator baffle # 25953429 (LS3 only); fan shroud, Phoenix part # 1005422; Canton Accusump part # CA24006 or # CA24024, along with Electric solenoid W/ epc # CA24273, Accusump Check Valve # CA2428, and Wheel to Wheel Adapter block # 0760-50001, and related hoses and mounting brackets; 180 degree thermostat Hypertech # 1015; Lingenfelter Performance Engineering #L310055204 thermostat (LS2 only); HD oil pressure shim Phoenix part # 1005421. Wrapping of tie-rod ends to shield heat is permitted. Trimming of the lower edge of the center of the air dam is allowed up to a depth of 3.9 cm. ARE dry sump system part #3021 S permitted; the following parts are included: mount w/tensioner and spacer #3020YM, serpentine belt #4032S, pulley #4SERP, oil tank #7030, tank bracket #7000, breather catch can # 7100, filter adapter #4010, damper assembly #8005. Aviaid Dry Sump System part number 008-10001 is permitted; the following parts are included: 3-stage pump 13111-1182, mounting hardware 40082 and 40018-83-1, HTD pump pulley 11649, HTD belt 46476, ATI damper assembly 917289, pan assembly 152-52504-10001, and tank assembly 110-50020-10001. The oil tank for either system shall be installed in the current battery location and the battery must be relocated to the same location as the 08 Corvette Z06; GM battery mounting bracket and hardware must be used. Alternate wheel bearings SKF Part # BAR 5049C permitted. Entire parking brake assembly (including interior lever) may be removed. **LS2: XXmm flat plate restrictor is required** **LS3: XXmm flat plate restrictor is required**

Chevrolet Corvette Z06 (2006-2012)	*103.26 x 92.0 6162*	*2685*	*18 x 10 (F) 19 x 11 (R) or 18 x 11 (F) 19 x 13 (R)*	*315/35 max. (F&R) or 315/35 max (F) 345/35 max (R)* *Rear tires may protrude up to 1.0" with GM T1 Performance Suspension package.* *Max. camber: (F) -3.5 (R) -2.5 with GM T1 Performance Suspension package.*	*2.66, 1.78, 1.30, 1.00, 0.74, 0.50 or 2.97, 2.07, 1.43,.1.00, 0.71, 0.57*	*3.42*	*(F) 325 / 340 Vented Disc (R) 305 / 330 Vented Disc or (F) 355 x 32 Vented Disc (R) 340 x 26 Vented Disc or May use 2-pc steel rotors with alum. hats up to 5% larger than Z51 rotor.* *----------.* *Any brake caliper pistons allowed. May use any four piston brake caliper and brackets with a 50 pound weight increase. Z06 brake calipers allowed.*	*3400*	*C6 T1 Suspension kit and Z51 option allowed. Floor may be modified to facilitate installation of cage mounting plates. The max. tire sizes supersede TCS 9.1.10.D.7.b. Removable roof panel shall be installed. The following parts are allowed: GM oil pan #12630477; GM radiator baffle # 25953429); fan shroud, Phoenix part # 1005422; Canton Accusump part # CA24006 or # CA24024, along with Electric solenoid W/ epc # CA24273, Accusump Check Valve # CA2428, and Wheel to Wheel Adapter block # 0760-50001, and related hoses and mounting brackets; 180 degree thermostat Hypertech # 1015; HD oil pressure shim Phoenix part # 1005421. Wrapping of tie-rod ends to shield heat is permitted. Trimming of the lower edge of the center of the air dam is allowed up to a depth of 3.9 cm. ARE dry sump system part #3021 S permitted; the following parts are included: mount w/tensioner and spacer #3020YM, serpentine belt #4032S, pulley #4SERP, oil tank #7030, tank bracket #7000, breather catch can # 7100, filter adapter #4010, damper assembly #8005. Aviaid Dry Sump System part number 008-10001 is permitted; the following parts are included: 3-stage pump 13111-1182, mounting hardware 40082 and 40018-83-1, HTD pump pulley 11649, HTD belt 46476, ATI damper assembly 917289, pan assembly 152-52504-10001, and tank assembly 110-50020-10001. The oil tank for either system shall be installed in the current battery location and the battery must be relocated to the same location as the 08 Corvette Z06; GM battery mounting bracket and hardware must be used. Alternate wheel bearings SKF Part # BAR 5049C permitted. Entire parking brake assembly (including interior lever) may be removed.* **LS2: XXmm flat plate restrictor is required** **LS3: XXmm flat plate restrictor is required**
Dodge Viper RT-10/ RT-10 ACR & GT-S / GT-S ACR (96-02)	101.6 x 98.5 7990	2444	18x10 (F) 18x13 (R)	(F) 275/40 (F) 315/35 (max) (R) 335/35	2.66, 1.78, 1.30, 1.00, 0.74, 0.50	3.07	(F&R) 330 Disc	**3600**	Differential Cooler Kit (Part # P5007010), Alternate Oil Pan (Part # P5007009), Throttle restrictor between each throttle body and plenum is mandatory: 0.060" flat steel plate with **one XXmm hole**. This max. tire supersedes TCS 9.1.10.D.7.b. Alternate radiator Parts Rack part #RDR1 or Roe Racing #SKU102-205 allowed. May update to 03-06 Viper brakes. ~~Entire parking brake assembly (including interior lever) may be removed~~**.**
Dodge Viper SRT-10 Incl. Coupe (03-06)	102.4 x 100.6 8300	2510.2	18x10 (F) 19x13 (R)	(F) 275/35 (F) 315/35 (max) (R) 345/30 Maximum camber: (F) -3.0 w/ Dodge Motorsports T1 suspension package	2.66, 1.78, 1.30, 1.00, 0.74, 0.50	3.07	(F&R) 355 Disc	**3600**	Detachable Autoform hardtop shall be installed on convertible model (latches shall be replaced with positive fasteners), convertible top shall be removed. Throttle restrictor between each throttle body and plenum is mandatory: .060" flat steel plate with one **XXmm hole.** A .250" thick (max) steel or aluminum spacer is permitted between the throttle body and the restrictor to provide clearance for the throttle butterfly. This spacer shall replicate the dimensions of the stock throttle body flange (i.e. throttle bore, bolt pattern, idle-air bypass port dimensions, etc.) Throttle body spacer bore(s) shall be no larger than the stock throttle body bore diameter at the gasket surface, and shall not be radiused in any way. Throttle restrictor may include idle air control and/or PCV orifice. The following parts are allowed: Dodge differential and trans. coolers, part # 4510173, Ron Davis radiator # 18VP03, Mopar performance fan delete kit #P5153260, Phoenix SRT10 electric fan kit #PPI123321, Mopar swing oil pickup kit # 4510174, Trans. mount # P4510179, Dodge Motorsports T1 suspension kit part # P5153251.This max. tire supersedes TCS 9.1.10.D.7.b. Rear parking brake calipers may be removed. Hypercoil springs #188A0750 (F) and 188A0800 (R) are allowed. B&M Shifter (PN45055) is permitted. Oil pan part #5037735AC, oil pick up part #5038022AB, oil pick up tube part #5037312AE are allowed. ~~Entire parking brake assembly (including interior lever) may be removed.~~
Ferrari 360 Modena & Challenge (00-02)	85.0 x 79.0 3586	2600	18 Alum	(F) 235/45 (R) 315/30 (max)	3.29, 2.16, 1.61, 1.27, 1.03, 0.95	4.44	(stock) (F&R) 330 Vented Disc (Challenge) (F) 355 x 32 Vented Disc (R) 330 x 18 Vented Disc	**2875**	**Member to request re-classing car, required.**

Ford Mustang Boss 302 (2012);	92.220 x 92.7 4957	2720	18 X 11 (F) 18 x 11 (R)	315/35 (F) 315/35 (R)	3.66, 2.43, 1.69, 1.32, 1.00, 0.65	3.73	(F) 355 x 32.1 Vented (R) 300 x 19.2 Vented	3500	**Flat plate restrictor XXXmm**
Ford Mustang GT 5.0L (10-12)	(92.220) x (92.7) / (4957)	107.1	18 x 10 (F) 18 x 10 (R)	295/35 max	3.66, 2.43, 1.69, 1.32, 1.00, .65	3.31	(F) (355) x (32.1) Vented (R) (300) x (19.2) Vented	*3500* ~~*with alt. driveshaft: 3700 (see notes)*~~	The following parts are allowed: GT/CS Front Fascia #BR3Z-17626-AA, GT/CS Rear Fascia #AR3Z-17F828-AA, Ford Accessories Spoiler #AR3Z-6344210-CA, 14" Brembo Brake Kit #M-2300-S, Rear Axle Cover #M-4033-K, Spring Kit #M-5300-A (M-5310-A front, M-5560-A rear), Strut Tower Brace #M-20201-S197, Swaybar Kit #M-5490-A, Jounce Bumper Kit # M-5570-A, Panhard Bar #M-4264-A, Rear Lower Control Arms #M-5649-R1, Rear Upper Shock Mount #M-18197-A. ~~57mm flat plate restrictor required.~~ *Ford Racing oil pan #M-6675-M50BR permitted. Driveshaft from The Driveshaft Shop part number FDSH22-A-CV1 is allowed.*
Lotus Sport Exige Cup 255 (2007)	82.0 x 85.0 1796	2300	16 x 7 (F) 17 x 8 (R)	195/50 (F) 225/45 (R)	3.12, 2.05, 1.48, 1.17, 0.92, 0.82		(F) 308 Vented Disc (R) 288 Vented Disc	2090	**Member to request re-classing car, required.**
Maserati Coupe GT Cambiocorsa (2004)	92.0 x 79.3 4244	2660	18 x 8 (F) 18x9.5 (R)	235/40 (F) 265/35 (R)	3.29, 2.16, 1.61, 1.27, 1.03, 0.85	3.73	(F) 333 Vented Disc (R) 310 Vented Disc	Coupe: 3825 Cambiocorsa: 3900	**Member to request re-classing car, required.**
Mitsubishi Lancer Evo 8/9 / RS / GSR / MR (03-06)	85.0 x 88.0 1997	2624	17 x 9 (F&R)	235/45 (F&R) or 275/45 (F&R)	2.93, 1.95, 1.41, 1.03, 0.72 or 2.91, 1.94, 1.43, 1.10, 0.87, 0.69	4.53	(F) 276 / 320 Vented Disc (R) 284 / 300 Vented Disc	**3500**	Permacool trans. oil cooler #1006 or Setrab #SET616 and Mocal pump # MOC-17522HT, AMS front and rear springs #AMS-SCCA01 allowed or AMS front and rear spring kit #AMS-SCCA02 including Genesis Technologies 2" spacer allowed. ~~**41mm Turbo Inlet Restrictor required.**~~ Koyo Radiator #KOY-R2676 allowed. Alternate AMS front sway bar permitted #AMS-SCCA-SBF02, alternate rear sway bar permitted #AMS-SCCA-SBR02. **Turbo Inlet restrictor XXXmm**
Mitsubishi Lancer Evo X / GSR / MR (08-11)	86.0 x 86.0 1998	2650	18x9 (F&R)	245/40 (F&R) or 275/45 (F&R) MAX	2.857, 1.950, 1.444, 1.096, .761 or 3.655, 2.368, 1.754, 1.322, 1.008, .775,	4.687 or 4.062	(F) 350 Vented Disc (R) 330 Vented Disc	*3599 with/or/ without* paddle shifter	Setrab #SET616 and Mocal pump # MOC-17522HT, AMS front and rear springs SCCA01-EVO X – AMS. 2" Genesis Technologies spacers allowed. ~~*42 mm Turbo inlet restrictor required.*~~ Alternate AMS front sway bar permitted #SCCA-SBF02 EVO X, alternate rear sway bar permitted #SCCA-SBR02 EVO X. **Turbo Inlet restrictor XXXmm**
Nissan 370Z (09-11) / 370Z NISMO Edition (09-11)	95.5 x 86.0 3696	2550	19 x 9 (F) 19 x 10 (R)	275/30 (F) 275/35 (R)	3.79, 2.32, 1.62, 1.27, 1.00, .79	3.69	(F)320 x 28 Vented (R)320 x 16 Vented	*3200*	5300S-SS370 T-2 spring kit allowed; 54600-SS370 T-2 front and rear sway bar kit allowed. Sports Package is allowed. (2) 40mm flat plate restrictors required. **Members allowed to request additional NISMO parts: i.e.: cold air boxes, etc for approval**
Pontiac GTO (04-06)	99.0 x 92.0 5665 101.68 x 92.0 5967	2788.9	17 x 9.5 (F&R)	245/45 or 275/35 (max) (F&R)	2.97, 2.07, 1.43, 1.00, 0.84, 0.57	3.46	(F) 296/320 Vented Disc (R) 286 Vented Disc	5665cc @ 3580 5967cc @ 3680	**Member to request re-classing car, required.**
Porsche 911/ 997 GT3 (03-05)	100.1 x 76.5 3600	2355	18 x 8.5 (F) 18 x 11 (R)	235/40 (F) 295/30 (R)	3.82, 2.15, 1.56, 1.21, 1.00, 0.85	3.44	(F) 350 Vented Disc (R) 330 Vented Disc	**3400**	H&R Springs (F) HRF 200-60-100, (R) HRF 140-70, tender springs 60-60-25, and spring holders ZT-1-X002A01 allowed. **XXmm flat plate restrictor is required**
Porsche 911 / 996 (98-05)	96.0 x 78.0 3400 100.1 x 76.5 3600	2454	18 x 8.5 (F) 18 x 11 (R)	245 (F), 295 (Max) (R)	3.82, 2.20, 1.52, 1.22, 1.02, 0.84	3.44	(F) 318 Disc (R) 299 Disc	*3200*	Engine & transmission coolers are free. Ducting for coolers is free, provided it doesn't change size and/or shape of factory body panels. Spring rates are free. Sway bar size & configuration is free. Ducting of air to rotors is allowed. Removal of rotor dust shields is allowed. Seats, steering wheel & shift knobs may be replaced. Spoilers & bumper/airdams are free provided they do not exceed the max. body width by any amount and/ or the max. body length by more than 1". Rear wings may be no higher, relative to the roofline, than a factory, non-extended, 3.8 RSR wing. Camber adjustment slots may be elongated. Porsche Motorsport rear control arms allowed.
Porsche 911 Carrera S (05-07)	99.0 x 82.8 3824	2350	(F) 19 x 8 (R) 19 x 11	(F) 235/35 (R) 295/30	3.91, 2.32, 1.61, 1.28, 1.08, .88	3.56	(F) 331 Vented Disc (R) 331 Vented Disc	**3200**	**Member to request re-classing car, required.**
Saleen Parnelli Jones Mustang (2007)	90.2 x 90.0 4601	2720	18 x 9.5	275/40	3.38, 2.00, 1.32, 1.00, 0.68	3.73	(F) 355 Vented Disc (R) 300 Vented Disc	3460	**Member to request re-classing car, required.**

Steeda Q335 Mustang (2007)	90.2 x 96.5 4931	2720	19 x 9 (F) 19 x 10 (R)	285/35	3.38, 2.00, 1.32, 1.00, 0.68	3.73	(F) 355 Vented Disc (R) 300 Vented Disc	3460	
Subaru Impreza WRX STi (03-07)	99.5 x 79.0 2457	2540	17 x 9	275/40	3.64, 2.38, 1.76, 1.35, 0.97, 0.76	3.9	(F) 323 Vented Disc (R) 313 Vented Disc	**3400**	The following parts are allowed: Fluidyne oil cooler # DB30120-10, trans. cooler # DB30115-8, diff. cooler # DB30115-8, cooler pump # WEL-K9200A, Mocal oil cooler #825a105, trans cooler # oc1197-6, Phoenix Performance brake duct kit # IPBK01. ~~**41mm Turbo Inlet Restrictor required.**~~ AMS front and rear springs #AMS-SCCA-STiST1 allowed. Front Sway bar Whiteline PN #BSF36XXZ and Rear Sway bar Whiteline PN #BSF37XZ allowed. Racecomp Brake duct kit part #RCE-CFKBK is allowed. Baldwin Motors spring package part BMI-T2SP1, permitted (includes: Front Hypercoil springs 2.25" ID / 7"x600 psi & helper springs, Rear Hypercoil springs 2.50" ID / 8"x550 psi & helper springs, Racecomp Engineering rear top perch adaptors, Racecomp Engineering modified rear top hats). **Members allowed to request cold air boxes, for approval (include part numbers and pictures)** **Turbo Inlet restrictor XXXmm**
Subaru Impreza WRX STi (08-11)	99.6 x 79.0 2457	2624	17 x 9	235/45	3.64, 2.24, 1.52, 1.14, 0.97, 0.76	3.90 Front 3.55 Rear	(F)326 Vented (R)316 Vented	**3400**	~~**41mm Turbo Inlet Restrictor required.**~~ Phoenix Performance 400 psi front springs, 500 psi rear springs, 25mm front sway bar, 22mm rear sway bar permitted. **Members allowed to request cold air boxes, for approval (include part numbers and pictures)** **Turbo Inlet restrictor XXXmm**

Class 2:

All Cars in class permitted the following changes:

- No Interiors
- Shocks Open **After market Springs and sway bars assigned on a case-by-case basis**
- **Maximum 3.0** degrees of negative chamber is allowed on front and rear suspensions. Strut suspensions may de-camber wheels by the use of eccentric bushings, eccentric bolts (crash bolts) at the strut-to-spindle, and/or by use of slotted adjusters at the top of the strut mounting plate. If upper strut slotted plates are used, they shall be located on existing chassis structure, utilizing the manufacturer's original bolt holes and may not serve as reinforcement for that structure. On other forms of suspension, camber adjustment may be achieved by the use of shims and/or eccentric bushings.
- **OEM ECU only (Re-Flashing permitted)**
- Sway bars not specified, may be requested
- 9" wheel unless specified on spec line.

Cars over 3500 lbs. permitted to run up to a 275 sized tire

Class 2	Bore x Stroke(mm)/ Displ. (cc)	Wheelbase (mm)	Max Wheel Size (inch)	Tire Size	Gear Ratios	Final Drive	Brakes (mm)	Weight (lbs)	Notes:
Acura TL Type S (07-08)	89.0 x 93.0 3471	2740	17 x 8 **or 9**	235/45	3.93, 2.48, 1.70, 1.25, 0.98, 0.77	3.29	(F) 310 Vented Disc (R) 282 Solid Disc	3660	H&R front springs (1027 lb/in) #180-60-180, rear springs (1827 lb/in) #120-60-320, and 24 mm rear sway bar Progressive Technology #62.0110 allowed.
Acura TL SH-AWD (2011-13)	90.065 x 96.1 3664	2776	19 X 9 (F) 19 x 9 (R)	275/40 (F) 275/40 (R)	3.63, 2.12, 1.53, 1.13, 0.85, 0.69	3.84	(F) 320 x 28 Vented (R) 334 x 11 Solid	3200	1000 lb/in springs permitted (F&R), part numbers H&R R25081000 or RF200180 or Eibach 0800.225.1000. 24mm rear anti-sway bar permitted, part number Progress 62.0111. The glass sunroof must be replaced with a metal panel; the panel must be the same thickness as the roof material; the panel must retain the shape of the glass sunroof and must be painted in body color.
Audi S4 (2004)	84.58 x 92.71 4162	2649	18 x 8 **or 9** (F&R)	235/40 (F&R)	3.67, 2.05, 1.46, 1.33, 0.92, 0.78	3.89	(F) 340 Vented Disc (R) 300 Vented Disc	3920	**Member to request re-classing car, required.**

Audi S4 (10-11)	84.5 x 89.0 2995	2809	18 X 9 (F&R)	275/35 (F&R)	3.67, 2.16, 1.52, 1.13, 0.92, 0.78	3.88	(F) 320 Vented (R) 286 Vented	3430	~~**40mm flat plate restrictor required. S tronic transmission permitted at 3480 lbs., Ratios: 3.692, 2.238, 1.559, 1/175, 0.915, 0.745, 0.617**~~ **Member to request re-classing car, required.**
Audi TTS Coupe (10-11)	82.5 x 92.8 1984	2468	18 X 9 (F&R)	275/35 (F&R)	2.92, 1.96, 1.40, 1.03, 1.08, 0.87	4.77 (1-4) 3.44 (5-6)	(F) 340 Vented (R) 310 Vented	3150	~~**38mm turbo inlet restrictor required.**~~ **Member to request re-classing car, required.**
BMW M Coupe (2002)	87.0 x 91.0 3246	2459	18 x 9.0(F) 18 x 10 (R)	225/45 (F) 245/40 (R)	4.21, 2.49, 1.66, 1.24, 1.00	3.15		3350	~~**Euro Header part #11 62 7 833 500 and 62 7 833 501 allowed.**~~ **Member to request re-classing car, required.**
BMW M3 (01-06)	87.0 x 91.0 3246	2731	18 x 9 (F) 18 x 9 (R)	275/35 (F & R)	4.23, 2.53, 1.67, 1.23, 1.00, 0.83	3.62	(F) 325 x 28 Vented Disc (R) 328 x 20 Vented Disc	3500	Factory paddle shifter is permitted. Fluidyne oil cooler # DB30816-STD allowed. Turner Motorsports Suspension package #TMST2M3 allowed. This consists of front springs TMS600-10-250, rear springs TMS650-8-250, front sway bar #TMSF23.235, rear sway bar #TMSR23.327. Turner brake duct kit #TMSBRAKE46 allowed. This max tire size supersedes TCS tire rule section 9.1.10.D.7.b. Euro Header part #11 62 7 833 500 and 62 7 833 501 allowed. **Flat plate restrictor XXXmm**
BMW 135i (08-09)	84.0 x 89.6 2679	2761	(F) 18 x 8 **or 9** (R) 18 x 9	(F) 225/40 (R) 255/35	4.00, 2.40, 1.58, 1.19, 1.00, 0.87	3.08	(F) 348 Vented Disc (R) 336 Vented Disc	3680	ZSP suspension package allowed. Sport seat package allowed. ~~(2) 29.5mm Turbo Inlet Restrictor required.~~ **Turbo Inlet Restrictor XXXmm**
BMW 330i/Ci (01-03)	84.0 x 89.6 2979	2726	17 x 9 (F&R)	Any DOT tire fitting stock body w/o modifications	4.21, 2.45, 1.66, 1.24, 1.00	2.93	(F) 325 x 28 Vented Disc (R) 325 x 20 Vented Disc	3335	~~**Racing Dynamics sway bar set (24mm & 21mm bars (one each)) is permitted. 350 lb. front springs w/ threaded collars and 400 lb. rear springs w/ adjusters are permitted.**~~ **Member to request re-classing car, required.**
BMW 330i Sedan (2006)	85.1 x 87.9 2996	2761	17 x 8 **or 9** (F&R)	225/45 (F&R)	4.35, 2.50, 1.67, 1.23, 1.00, 0.85	3.15	(F) 330 Vented Disc (R) 335 Vented Disc	3335	**Member to request re-classing car, required.**
BMW 335CI (2007)	84.0 x 89.6 2679	2761	(F) 18 x 8 **or 9** (R) 18 x 9	(F) 225/40 (R) 255/35	4.00, 2.40, 1.58, 1.19, 1.00, 0.87	3.08	(F) 348 Vented Disc (R) 336 Vented Disc	3680	**Member to request re-classing car, required.**
BMW Z4 3.0L (03-04)	84.1 x 89.7 2986	2494	17 x 8 **or 9** (F&R)	225/45	4.35, 2.50, 1.66, 1.24, 1.00, 0.85	3.07	(F) 300 Vented Disc (R) 294 Vented Disc	3120	Detachable hardtop shall be installed (latches shall be replaced with positive fasteners), convertible top shall be removed.
BMW Z4 M Coupe (2007)	87.0 x 91.0 3246	2497	(F) 18 x 8 **or 9** (R) 18 x 9 or (F) 18 x 9 (R) 18 x 9 at additional 25 lbs.	(F) 225/45 (R) 255/40	4.35, 2.50, 1.67, 1.23, 1.00, 0.85	3.62	(F) 345 Vented Disc (R) 328 Vented Disc	3375	Euro manifold part #11 62 7 833 500 and 62 7 833 501 allowed. Turner springs permitted: front TMS600-10-250, rear TMS650-8-250; Ground control # MZ4Swaybar set permitted with 100 lbs penalty. **Flat plate restrictor XXXmm**

BMW Z4 3.0si Coupe (07-08)	85.1 x 87.9 2996	2495	18 x **8 or 9**(F&R)	225/45	4.35, 2.50, 1.66, 1.23, 1.00, 0.85	roadster: 3.23 coupe: 3.46.	(F) 325 x 12.8 Vented Disc (R) 294 x 11.6 Solid Disc	**3200 or lighter**	May use H&R springs: front RF160090, rear RF160100; rear spring height adjusters: Turner #HR92-K-X-011A01; H&R sway bar kits: front 70276 27mm, rear 71276 21mm, at 3500 lbs.
Buick Regal (2011)	86.0 x 86.0 1998	2631	18 x 8 **or 9** (F) 18 x 8 **or 9** (R)	**255/45 (F) Max 255/45 (R) Max**	3.38, 1.76, 1.18, 0.89, 0.70	4.05	(F) 315 Vented Disc (R) 292 Solid Disc	**2950**	~~**36mm Turbo Inlet Restrictor required.**~~ Front springs part # CCS635, rear springs # CCS639, front control arms # CCS636 and CCS637 permitted. **Turbo Inlet Restrictor XXXmm**
Chevrolet Camaro SS & Z-28 (98-02)	99.0 x 92.0 5666	2568	17x9 (F&R)	275/40	2.66, 1.78, 1.30, 1.00, 0.74, 0.50	3.42	(F)300 Vented (R) 302 Vented	**3400**	Power steering cooler (option code V12) is permitted. Front spring rate shall be 280-320 lbs. per inch and the minimum free length is 13 3/4 inches. Severn Canton accusump part # CA24024 or CA24006, along with Electric solenoid W/ epc # CA24273, Accusump Check Valve #CA2428, and Wheel to Wheel Adapter block # 0760-50001, and related hoses and mounting brackets are permitted. GM oil and diff coolers #12480080 allowed. Ron Davis Radiator 11-16CA0002 allowed. Z28 can use original hood. Strano Performance Camaro Track Package (Part #SP- 141, Spring Set (550# Front/150# Rear); Part #SP-8316. Front Sway Bar (1-3/8" or 35mm); Part #SP-8327, Rear Sway Bar (7/8" or 22mm); Part #UMI-2006, Strut Tower brace, 2 pt, 1.25" OD) permitted.
Chevrolet Cobalt (05-07)	86.0 x 86.1 1998	2629	18 X 9.5 (F&R)	255/50	3.38, 1.76, 1.18, 0.89, 0.71	4.05	(F) 296 Vented Disc (R) 270 Solid Disc	2850	The following GM parts are allowed: front springs part # CCS635, rear springs # CCS639, front control arms # CCS636 and CCS637, shrouding kit # CCS644. Griffin radiator # 9D-18194-01 allowed. Stage Two Supercharger kit, part #17803229 (includes Belt -#12597993 and Injector kit -#12597995) permitted. Optional rear sway bar max 42 mm (body and suspension mounting same as OEM). AEM cold-air intake (part# 21-532C) is permitted. Maximum spring rate 500 lbs/in (F), 700 lbs/in (R). **Allow: Smaller Supercharger pulley: size (member input requested)**
Chevrolet Cobalt SS (08-*10*)	85.3 x 86.1 1998	2631	*18 x 9.5*	*255/50*	3.38, 1.76, 1.18, 0.89, 0.70	4.05	(F) 315 Vented Disc (R) 292 Solid Disc	2900	Rear sway bar max 42 mm (body and suspension mounting same as OEM), add AEM cold-air intake (part #21-682C), GM Part #55206797 sensor allowed, ~~max spring rate 500# (F) 700# (R),~~ Front control arms # CCS636 and CCS637. **Any spring up to a maximum spring rate of 800 pounds may be used Turbo Inlet Restrictor XXXmm**

Chevrolet HHR SS (08-09)	85.3 x 86.1 1998	2631	*18 x 9*	**255/45 MAX**	3.38, 1.76, 1.18, 0.89, 0.70	4.05	(F) 315 Vented Disc (R) 270 Solid Disc	3150	~~**38mm Turbo Inlet restrictor required. Front springs part # CGS635, rear springs # CGS639, front control arms # CGS636 and CGS637.**~~ **Member to request re-classing car, required.**
Dodge SRT-4 (03-05)	88.0 x 101.1 2458	2667	*17 x 8.5 (F&R)*	*205/50 or* **255/50 Max**	3.47, 2.05, 1.37, 0.97, 0.76	3.53	(F) 280 Vented Disc (R) 220 Solid Disc	**2900**	C & R Heavy Duty Radiator a/ Spal fan, part # 4051110300-DP allowed. ~~**38mm turbo inlet restrictor required.**~~ **Any spring up to a maximum spring rate of 800 pounds may be used Turbo Inlet Restrictor XXXmm**
Ford Mustang Coupe GT & Shelby GT 4.6L (05-10)	90.2 x 90.0 4601	2720	*18 x 9.5 (F&R)*	*255/40 (F&R) or 255/45 (F) 285/40 (R)*	3.38, 2.00, 1.32, 1.00, 0.675	3.55 or 3.73	(F) 316 / 355 Vented Disc (R) 300 Vented Disc	**3400**	The following parts are allowed: Strut tower brace part #M20201-S197, Radiator #M-8005-S197, Ford Spring kit M-5300-K, sway bars M-5490-A, damper kit M-18000-A.
Ford Mustang Coupe GT & Shelby GT 5.0L (05-10)	(92.220) x (92.7) / (4957)	2720	*18 x 10 (F&R)*	*255/40 (F&R) or 255/45 (F) 285/40 (R)*	3.38, 2.00, 1.32, 1.00, 0.675	3.55 or 3.73	(F) 316 / 355 Vented Disc (R) 300 Vented Disc	**3600**	The following parts are allowed: Strut tower brace part #M20201-S197, Radiator #M-8005-S197, Ford Spring kit M-5300-K, sway bars M-5490-A, damper kit M-18000-A. 2005-2010 Mustang GT 4.6L may be converted to 2011-2012 5.0 liter specifications; if done, all drivetrain components must updated to the later model; VIN number will be disregarded for this conversion.
Ford Mustang Cobra (99-02)	90.2 x 90.0 4601	2573	*17 x 9 (F&R)*	*245/45 or 255/45*	3.37, 1.99, 1.33, 1.00, 0.67	3.27	(F) 330 x 28 Vented Disc (R) 295 x 18 Vented Disc	**3680**	~~**Service port mounted aftermarket PROM is permitted. 17 x 9 wheels and 255/45 tires are from 1995 Cobra R.**~~ **Member to request re-classing car, required.**
Ford Mustang Mach I (03-04)	90.2 x 90.0 4601	2572	*17 x 9 (F&R)*	*245/45 or 255/45*	3.38, 2.00, 1.32, 1.0, 0.62	3.55		**3230**	~~**Sean Hyland Motorsports Brake Duct Kit Part # SHMVDK-TF approved. Bulitt Springs allowed, part # 1R3Z-5310-CA (F) 1R3Z-5560-AA (R). The following parts are allowed: Steeda springs (F) 223-121-1000, (R) 223-SAM350RSR, rear sway bar 006-470, front sway bar bushings 122-4-5135-G, strut brace 555-5714, clutch cable 555-7041 and 555-7025, Cobra R brakes are permitted with an additional 25 lbs added.**~~ **Member to request re-classing car, required.**
Ford Mustang V6 (11-12)	(95.490) x (86.70) / 226 CID	107.1	18 x 8 **or 9** (F) 18 x8 **or 9** (R)	**275(max) (F&R)**	4.24, 2.54, 1.67, 1.24, 1.00, .70	3.31	(F) (316) x (30.0) Vented (R) (300) x (19.2) Vented	**3500** ~~with alt. driveshaft: 3525 (see notes)~~	The following parts are allowed: Ford Accessories Spoiler #AR3Z-6344210-CA Rear Axle Cover #M-4033-K, Spring Kit #M-5300, Strut Tower Brace #M-20201-S197, Swaybar Kit #M-5490, Jounce Bumper Kit # M-5570-A, Panhard Bar #M-4264-A, Rear Lower Control Arms #M-5649-R1, Rear Upper Shock Mount #M-18197-A. Car must meet V-8 T2 specification; in Notes: Disregard the engine content portion of VIN. 14" Brembo Brake Kit #M-2300-S permitted. Driveshaft from The Driveshaft Shop part number FDSH18-A is allowed.

Honda S2000 (all) (00-09)	87.0 x 90.7 2157	2400	18 x 9 (F/R)	275/50	3.13, 2.05, 1.48, 1.16, 0.97, 0.81 or 3.13, 2.05, 1.48, 1.16, 0.94, 0.76	4.1	(F) 300 Disc (R) 282 Disc	**2700**	Detachable hardtop shall be installed (latches shall be replaced with positive fasteners), convertible top shall be removed. Factory bolt-in roll bar may be removed to facilitate the installation of the req'd roll cage. Passenger seat belt assembly may be removed in conjunction with factory bolt-in roll bar. Comptech differential housing part #550-040 allowed. Springs and sway bars from 2008 S2000 CR allowed. This max tire size supersedes TCS tire rule section 9.1.10.D.7.b. Updating and backdating of flywheel is not permitted. CR front fascia, rear deck lid, and wing are permitted. TBH cold-air intake (Part # CT Engineering 320-036). Maximum spring rate 600 lbs/in.
Hyundai Genesis Coupe (2010-)	86.0 x 86.0 1998	2819.4	19 x 8 **or 9** (F) 19 x 8.5 **or 9** (R)	**255/50 (F) Max 255/40 (R) Max**	4.229, 2.467, 1.671, 1.233, 1.000, 0.794	3.909	340.4 (F) 330.2 (R)	3200	~~**35mm Turbo Inlet Restrictor required; Track Pack allowed**~~ **Member to request re-classing car, required.**
Infiniti G35 Coupe (03-06)	95.5 x 81.4 3498	2850	19 x 9 (F) 19 x 10 (R)	225/40 (F) 245/40 (R) 285/30 (max) (F&R)	3.79, 2.32, 1.62, 1.27, 1.00, 0.79	3.54	(F) 324 Vented Disc (R) 322 Solid Disc	3268	~~**The following are allowed: Nissan oil cooler kit #21300-RSZ33, Nissan power steering cooler kit #49790-RSZ30-US, Rear diff cover Nismo part #99996-35TDK, Nissan Mtspts. Brake duct kit # 99996-Z3344, Nissan heavy duty spring kit part #99996-65Z3OUS, Nismo sway bar kit #99996-RSZ3OUS. This max. tire size supersedes TCS 9.1.10.D.7.b. Modifications to the stock fender liner is not permitted. Track option aero package permitted.**~~ **Member to request re-classing car, required.**
Lotus Club Racer (2008)	82.0 x 85.0 1796	2301	16x6.5 (F) 17x7.5 (R)	195/50 (F) 225/45 (R)	3.12, 2.05, 1.48, 1.17, 0.96, 0.82	4.53	(F) 308 Vented Disc (R) 288 Vented Disc	2190	~~**An SCCA approved welded steel cage that is bolted to the chassis/ frame is allowed. The floor may be modified to facilitate the rollcage mounting points. The stock extruded aluminum chassis satisfies the requirement for forward anti-intrusion braces. The factory roll hoop shall be replaced with a single continuous hoop. Sway bar #A120L0020F, spring front #A120C0019H, spring rear #A120D0047H allowed. Lotus Elise oil accumulator system part # ALS3E0022J (accusump part #24026 and electric valve part #24270) is allowed. Lotus Track use chassis brace kit #lotac05377 allowed. Moroso Oil Pan part # 20970 is allowed. G-PAN Baffled Oil Pan is allowed. Rear cage braces may pass through rear window. Front spring, Eibach part # 600.225.0475 and rear spring, Eibach part # 800.225.0650 allowed.**~~ **Member to request re-classing car, required.**

Lotus Exige S / S220 / S240 / Elise SC (07-10)	82.0 x 85.0 / 1796	2301	16x6.5 (F) 17x7.5 (R)	195/50 (F) 225/45 (R)	3.17, 2.05, 1.48, 1.17, 0.92, 0.81	4.53	(F) 288 Vented Disc (R) 288 Vented Disc (F) 308 Vented Disc (R) 288 Vented Disc	2190 S240: 2400	An SCCA approved welded steel cage that is bolted to the chassis/frame is allowed. The floor may be modified to facilitate the rollcage mounting points. The stock extruded aluminum chassis satisfies the requirement for forward anti-intrusion braces. The factory roll hoop shall be replaced with a single continuous hoop. Sway bar #A120L0020F, spring front #A120C0019H, spring rear #A120D0047H allowed. Lotus Elise oil accumulator system part # ALS3E0022J (accusump part #24026 and electric valve part #24270) is allowed. Lotus Track use chassis brace kit #lotac05377 allowed. Moroso Oil Pan part # 20970 is allowed. G-PAN Baffled Oil Pan is allowed. Rear cage braces may pass through rear window. Front spring, Eibach part # 600.225.0475 and rear spring, Eibach part # 800.225.0650 allowed. Lotus Exige (2006) may be supercharged by meeting all specifications in this classification.
Lotus Elise (05-10)	82.0 x 85.0 1796	2301	16x8 (F) 17x8 (R)	195/50 (F) 225/45 (R)	3.12, 2.05, 1.48, 1.17, 0.96, 0.82	4.53	(F) 288 Vented Disc (R) 288 Vented Disc	2090	Detachable hardtop shall be installed (latches shall be replaced with positive fasteners), convertible top shall be removed. An SCCA approved welded steel cage that is bolted to the chassis/frame is allowed. The floor may be modified to facilitate the rollcage mounting points. The stock extruded aluminum chassis satisfies the requirement for forward anti-intrusion braces. The factory roll hoop shall be replaced with a single continuous hoop. Lotus Elise oil accumulator system part # ALS3E0022J (accusump part #24026 and electric valve part #24270) is allowed. Lotus Track use chassis brace kit #lotac05377 allowed. Sway bar #A120L0020F, spring front #A120C0019H, spring rear A120D0047H allowed. Moroso Oil Pan part # 20970 is allowed. G-PAN Baffled Oil Pan is allowed. Rear cage braces may pass through rear window. Front spring, Eibach part # 600.225.0475 and rear spring, Eibach part # 800.225.0650 allowed.

Lotus Exige (2006)	82.0 x 85.0 1796	2301	16x6.5 (F) 17x7.5 (R)	195/50 (F) 225/45 (R)	3.12, 2.05, 1.48, 1.17, 0.96, 0.82	4.53	(F) 288 Vented Disc (R) 288 Vented Disc	2090	An SCCA approved welded steel cage that is bolted to the chassis/frame is allowed. The floor may be modified to facilitate the rollcage mounting points. The stock extruded aluminum chassis satisfies the requirement for forward anti-intrusion braces. The factory roll hoop shall be replaced with a single continuous hoop. Lotus Elise oil accumulator system part #ALS3E0022J (accusump part #24026 and electric valve part #24270) is allowed. Lotus Track use chassis brace kit #lotac05377 allowed. Sway bar #A120L0020F, spring front #A120C0019H, spring rear A120D0047H allowed. Moroso Oil Pan part # 20970 is allowed. G-PAN Baffled Oil Pan is allowed. Rear cage braces may pass through rear window. Front spring, Eibach part # 600.225.0475 and rear spring, Eibach part # 800.225.0650 allowed. Sector 111 Eliminator V3 permitted to replace rear panel.
Mazda Mazdaspeed3 (2007)	87.5 x 94.0 2260	2639	18 x 9	**255/55 Max**	3.54, 2.24, 1.54, 1.17, 1.09, 0.85	1-4: 3.94 5-6: 3.35	(F) 300 Vented Disc (R) 280 Solid Disc	3250	**Any spring up to a maximum spring rate of 800 pounds may be used Turbo Inlet Restrictor XXXmm**
Mazda Mazdaspeed3 (07-09)	87.5 x 94.0 2260	2639	18 x 9.5 (F & R)	255/50	3.54, 2.24, 1.54, 1.17, 1.09, 0.85	1-4: 3.94 5-6: 3.35	(F) 300 Vented Disc (R) 280 Solid Disc	2900	~~**35mm Turbo Inlet restrictor required.**~~ Mazda Motorsports Rear Swaybar Kit 32mm OD hollow Tube Part #: 0000-04-3420. Optional rear sway bar max 42mm (body and suspension mounting same as OEM). AEM cold-air intake (part# 21-488) is permitted. ~~Maximum spring rate 500 lbs/in (F), 700 lbs/in (R).~~ **Any spring up to a maximum spring rate of 800 pounds may be used Turbo Inlet Restrictor XXXmm**
Mazda Mazdaspeed3 (10-11)	87.5 x 94.0 2260	2309	18 x 9.5 (F & R)	255/50	3.21, 1.91, 1.37, 1.03, 0.95, 0.79	1-4: 4.19 5-6: 3.53	(F) 320 Vented Disc (R) 280 Solid Disc	2900	~~**35mm Turbo Inlet restrictor required.**~~ Mazda Motorsports Rear Swaybar Kit 32mm OD hollow Tube Part #: 0000-04-3420. Optional rear sway bar max 42mm (body and suspension mounting same as OEM). AEM cold-air intake (part# 21-488) is permitted. ~~Maximum spring rate 500 lbs/in (F), 700 lbs/in (R).~~ **Any spring up to a maximum spring rate of 800 pounds may be used Turbo Inlet Restrictor XXXmm**

Mazda MazdaSpeed Miata (04-05)	83.0 x 85.0 1839	2266	18 x 8 **or 9** (F) 18 x 9 (R)	245/45	3.76, 2.27, 1.65, 1.26, 1.00, 0.84	4.1	(F) 269 Vented Disc (R) 277 Solid Disc	2480	~~**Detachable hardtop shall be installed. Latches shall be replaced with positive fasteners. Convertible top assembly shall be removed. Mazdaspeed radiator part # 0000-01-5503 and suspension kit #K-SPEC-M5-SUS9 allowed. Canton Accusump #24-026, Flex-a-lite install sandwich #3965, and related hoses, valve, and bracket allowed. Bell Engineering (BEGi) intercooler kit permitted #67022. Complete kit includes throttle inlet tube, cool air box and Forge Motorsports diverter valve. Kit must be used as a whole, including all hardware.~~ **Member to request re-classing car, required.**
Nissan 350Z Track/ Touring/ Standard/ Nismo (03-08)	95.5 x 81.4 3498	104.3	18 x 9 (F) 18 x 10 (R)	245/40 or 225/45 (F) 265/35 or 245/45 (R) 285/30 (max) (F&R)	3.79, 2.32, 1.62, 1.27, 1.00, 0.79	3.54	(F) 296/324 Vented Disc (R) 292/332 Vented Disc	3168	The following are allowed: Track option Aero package, Nissan oil cooler kit #21300-RSZ33, Nissan power steering cooler kit #49790-RSZ30-US, Rear diff cover Nismo part #99996-35TDK, Nissan Mtspts. Nissan heavy duty spring kit part #99996-65Z3OUS, Nismo sway bar kit #99996-RSZ3OUS. This max. tire size supersedes TCS 9.1.10.D.7.b. Modifications to the stock fender liner is not permitted.
Pontiac Solstice GXP Coupe/ Convertible (07-09)	85.3 x 86.1 1998	2415	18 x 9.5	275/35	3.75, 2.26, 1.51, 1.00, 0.73	3.73	(F) 296 Vented Disc (R) 278 Solid Disc	**3200**	Detachable hardtop GM part #PCS-0664 shall be installed and convertible top shall be removed. Suspension option ZOK and Rear Spoiler (D52) allowed. This max tire size supersedes TCS 9.1.10.D.7.b. B&M cooler #70298 and Weldon Series 9200 pump may be used for differential and/ or transmission cooling. The mounting and wiring associated with the installation of these coolers is unrestricted provided it serves no other purpose. Ron Davis radiator part #1-38S006 allowed. Brake calipers and rotors from Chevrolet Cobalt SS (08-09) permitted - part numbers 25900763 - left front caliper, 25900764 - right front caliper, 25902073 - left rear caliper, 25902074 - right rear caliper, 25869424 - rear caliper bracket, 25994100 - front rotors, 15921402 - rear rotors. Any aftermarket top allowed if material, size, shape and weight are the same as factory top. **Turbo Inlet Restrictor XXXmm**
Porsche Boxster S (00-03)	93.0 x 78.0 3179	2415	17 x 7 **or 9** (F) 17 x 8.5 **or 9** (R)	205/50 (F) 255/40 (R)	3.82, 2.20, 1.52, 1.22, 1.02, 0.84	3.44	(F) 318 x 28 Vented & cross-drilled (R) 300 x 25 Vented & cross-drilled	2880	~~**OEM hardtop req'd (latches shall be replaced w/ positive fasteners). Convertible top shall be removed. Front spoiler, rear spoiler, and rocker panel extensions from OEM Porsche factory aero kit are permitted. Sport suspension pkg. is permitted. Factory bolt-in rollbar may be removed to facilitate the installation of the required rollcage.**~~ **Member to request re-classing car, required.**

Porsche Boxster S (2005)	93.0 x 78.0 3179	2415	18 x 8 **or 9** (F) 18 x 9 (R)	205/50 (F) 255/40 (R)	3.67, 2.05, 1.41, 1.13, 0.97, 0.82	3.87	(F) 318 x 28 Vented & cross-drilled (R) 300 x 25 Vented & cross-drilled	3240	**Member to request re-classing car, required.**
Porsche Caymen (2006)	96.0 x 78.0 3387	2416	18 x 8 **or 9** (F) 18 x 9 (R)	235/40 (F) 265/40 (R)	3.31, 1.95, 1.41, 1.13, 0.97, 0.82	3.88	(F) 318 Vented and Cross-drilled (R) 299 Vented and Cross-drilled	2775	**Member to request re-classing car, required.**
Porsche Caymen S (2006-2008)	96.0 x 78.0 3387	2416	18 x 8 **or 9** (F) 18 x 9 (R)	235/40 (F) 265/40 (R)	3.31, 1.95, 1.41, 1.13, 0.97, 0.82	3.88	(F) 318 Vented and Cross-drilled (R) 299 Vented and Cross-drilled	3300	**Member to request re-classing car, required.**
Porsche Caymen S (2010)	96.0 x 78.0 3387	2416	18 x 8 **or 9** (F) 18 x 9 (R)	235/40 (F) 265/40 (R)	3.31, 1.95, 1.41, 1.13, 0.97, 0.82	3.88	(F) 318 Vented and Cross-drilled (R) 299 Vented and Cross-drilled	3470	**Member to request re-classing car, required.**
Saturn Ion Redline (04-07)	86.0 x 86.1 1998	2629	18 x 9.5 (F & R)	255/50	3.38, 1.76, 1.18, 0.89, 0.71	4.05	(F) 296 Vented Disc (R) 270 Solid Disc	**2850**	The following GM parts are allowed: front springs part # CCS635, rear springs # CCS639, front control arms # CCS636 and CCS637, shrouding kit # CCS644. Griffin radiator # 9D-18194-01 allowed. Stage Two Supercharger kit, part #17803229 (includesBelt -#12597993 and Injector kit -#12597995) permitted. Optional rear sway bar max 42 mm (body and suspension mounting same as OEM). AEM cold-air intake (part# 21-532C) is permitted. ~~Maximum spring rate 500 lbs/in (F), 700 lbs/in (R).~~ **Any spring up to a maximum spring rate of 800 pounds may be used Requesting member input on smaller supercharger pulley size:**
Saturn Sky Red Line (07-09)	85.3 x 86.1 1998	2415	18 x 9.5	275/35	3.75, 2.26, 1.51, 1.00, 0.73	3.73	(F) 296 Vented Disc (R) 278 Solid Disc	**3250**	Detachable hardtop GM part #PCS-0664 shall be installed and convertible top shall be removed. Suspension option ZOK and Rear Spoiler (D52) allowed. This max tire size supersedes TCS 9.1.10.D.7.b. B&M cooler #70298 and Weldon Series 9200 pump may be used for differential and/or transmission cooling. The mounting and wiring associated with the installation of these coolers is unrestricted provided it serves no other purpose. Ron Davis radiator part #1-38S006 allowed. 38mm Turbo Inlet Restrictor required. Quantum Motorsports brake duct kit #09820 is allowed. Brake calipers and rotors from Chevrolet Cobalt SS (08-09) permitted - part numbers 25900763 - left front caliper, 25900764 - right front caliper, 25902073 - left rear caliper, 25902074 - right rear caliper, 25869424 - rear caliper bracket, 25994100 - front rotors, 15921402 - rear rotors. Any aftermarket top allowed if material, size, shape and weight are the same as factory top. **Turbo Inlet Restrictor XXXmm**

Volkswagen GTI, Jetta GLI (06-10)	82.5 x 92.8 1984	2578	17 x 8 **or 9** (F&R)	**255/45 Max** (F&R)	DSG: 3.46, 2.15, 1.46, 1.08, 1.10, 0.92 STD: 3.36, 2.09, 1.47, 1.10, 1.11, 0.93	DSG: 4.10 / 3.14 STD: 4.00, 3.09	(F) 312 Vented Disc (R) 286 Solid Disc	DSG @ **2900** STD @ **2900**	~~**35mm Turbo Inlet Restrictor required.** Spring kit #1K0 071 678 is permitted. VW Spring kit #1K0 071 678A allowed~~. **Any spring up to a maximum spring rate of 800 pounds may be used Turbo Inlet Restrictor XXXmm**

Class 3:
All Cars in class permitted the following changes:

- No Interiors
- Shock/Springs OEM only, unless specified
- **Maximum 2.5** degrees of negative chamber is allowed on front and rear suspensions. Strut suspensions may de-camber wheels by the use of eccentric bushings, eccentric bolts (crash bolts) at the strut-to-spindle, and/or by use of slotted adjusters at the top of the strut mounting plate. If upper strut slotted plates are used, they shall be located on existing chassis structure, utilizing the manufacturer's original bolt holes and may not serve as reinforcement for that structure. On other forms of suspension, camber adjustment may be achieved by the use of shims and/or eccentric bushings.
- **OEM ECU only (Re-Flashing permitted)**
- Sway bars not specified, may be requested

CLASS 3	Bore x Stroke(mm)/ Displ. (cc)	Wheelbase (mm)	Track F & R (mm)	Wheel Size(in.)/ Mat'l.	Tire Size (stock)	Gear Ratios	Final Drive	Brakes (mm)	Weight (lbs)	Notes:
Acura Integra GS-R VTEC (3 or 4 door) (95-01)	81.0 x 87.2 1797	2571	1476 / 1471 or 1481 / 1476 w/ alt. Susp.	15 x 6 Alum	195/55	3.23, 1.90, 1.36, 1.03, 0.79	4.4	(F) 262 x 21 Vented Disc (R) 239 x 10 Solid Disc	**TBA**	~~Springs (F) P/N 51401-ST7-R01, (R) P/N 52441-ST7-R01, Shocks P/N (LF) 51606-ST7-R01, (RF) 51605-ST7-R01, (Rear) 52611-ST7-R01,~~ Shock bushings (R) P/N 52622-SR3-003, rear control arms P/N (LR) 52360-ST7-R00, (RR) 52350-ST7-R00 from Type R, and Mugen 26mm rear sway bar. **-Any non-adjustable shock absorber is allowed. The shock must be installed in the original mounting locations. Remote shocks are not permitted. Threaded shock bodies or adjusters may be used. - Any spring up to a maximum spring rate of 800 pounds may be used - Cold Air Intake system (pictures and/ or parts have to be sent to Topeka for approval) - OEM Factory Limited Slip (member to supply part number to Topeka for approval) - OEM bump stops**
Acura RSX Type-S (05-06)	86.0 x 86.0 1998	2570	1487 / 1486	17 x 7 (F&R)	215/45 (F&R)	3.27, 2.13, 1.52, 1.15, 0.92, 0.74	4.765	(F) 300 Vented Disc (R) 260 Solid Disc	2945	Factory limited slip from 06-08 Civic Si, P/N 41200-PNT-003 permitted.
Acura RSX Type-S (02-04)	86.1 x 86.0 1988	2570	1482 / 1481	16 x 6.5 Alum	205/55	3.27, 2.13, 1.52, 1.15, 0.92, 0.74	4.4	(F) 300 x 26 Vented Disc (R) 260 x 10 Solid Disc	2845	Factory limited slip from 06-08 Civic Si, P/N 41200-PNT-003 permitted.
Audi A4 V-6 (96-01)	82.5 x 86.4 2771	2606	1496 / 1473	16 x 7 Alum	205/55	3.67, 1.99, 1.41, 1.00, 0.74	3.2	(F) 277 x 25 Vented Disc (R) 244 x 15 Solid Disc	3055	
BMW Z4 2.5L (03-05)	84.0 x 75.0 2494	2495	1473 / 1524	16 x 7 Alum	225/50	4.23, 2.52, 1.66, 1.22, 1.00	3.46	(F) 286 Vented Disc (R) 280 Solid Disc	3195	Detachable hardtop shall be installed (latches shall be replaced w/ positive fasteners), convertible top shall be removed. Alternate wheel BMW #36-11-1-095-058 16 x 7 is permitted.

Chevrolet Cobalt SS Coupe (06-07)	88.0 x 98.0 2384	2628	1492 / 1475	17 x 7 Alum	205/50	3.58, 2.02, 1.35, 0.98, 0.69	3.94	(F) 296 Vented Disc (R) 270 Solid Disc	**TBA**	**Any non-adjustable shock absorber is allowed. The shock must be installed in the original mounting locations. Remote shocks are not permitted. Threaded shock bodies or adjusters may be used.** **- Any spring up to a maximum spring rate of 500 pounds front and 800 pound rear may be used** **- Cold Air Intake system (pictures and/ or parts have to be sent to Topeka for approval)** **OEM Factory Limited Slip (member to supply part number to Topeka for approval)** **- OEM bump stops**
Chevrolet Cobalt Sport (2008)	88.0 x 98.0 2384	2628	1492 / 1475	17 x 7 Alum	205/50	3.58, 2.02, 1.35, 0.98, 0.69	3.84	(F) 296 Vented Disc (R) 270 Solid Disc	**TBA**	**Any non-adjustable shock absorber is allowed. The shock must be installed in the original mounting locations. Remote shocks are not permitted. Threaded shock bodies or adjusters may be used.** **- Any spring up to a maximum spring rate of 500 pounds front and 800 pound rear may be used** **- Cold Air Intake system (pictures and/ or parts have to be sent to Topeka for approval)** **OEM Factory Limited Slip (member to supply part number to Topeka for approval)** **- OEM bump stops**
Chevrolet Camaro V-6 (96-02)	96.5 x 86.36 3790	2568	1552 / 1549	16 x 8	245/50	3.75, 2.19, 1.41, 1.00, 0.72	3.42	(F) 302 x 23 Disc (R) 305 x 25 Disc	3300	Performance option permitted, consisting of limited slip differential, uplevel steering rack, dual exhaust. GM PS cooler #10417037 allowed. Z-28 front sway bar (30mm) and rear sway bar (19mm) allowed. GM 1LE front (#26032907 32mm) and rear (#10021221 21 mm) sway bar allowed. Front spring rate shall be 280-320 lbs. per inch and the minimum free length is 13 ¾ inches. Koni Shocks, 8241-1139 (F) and 8241-1140 (R) permitted. *SP-141 front and rear springs permitted; SP-8316 front sway bar and SP-8327 rear sway bar permitted; UMI-2006 shock tower brace permitted.*
Chrysler Neon ACR SOHC (4 door) (01-02)	87.5 x 83.0 1995	2667	1474 / 1476	15 x 6 Alum	185/60	3.50, 1.96, 1.36, 0.97, 0.81	3.94	(F) 257 x 22 Vented Disc (R) 270 x 9 Solid Disc	**TBA**	**Any non-adjustable shock absorber is allowed. The shock must be installed in the original mounting locations. Remote shocks are not permitted. Threaded shock bodies or adjusters may be used.** **- Any spring up to a maximum spring rate of 500 pounds front and 800 pound rear may be used** **- Cold Air Intake system (pictures and/ or parts have to be sent to Topeka for approval)** **OEM Factory Limited Slip (member to supply part number to Topeka for approval)** **- OEM bump stops**
Ford Focus SVT (02.5-04)	84.0 x 88.0 2000	2616	1494 / 1486	17 x 7 Alum	215/45	(overall) 12.7, 7.7, 5.7, 4.6, 3.8, 3.1	2.88 & 4.25	(F) 300 Vented Disc (R) 280 Solid Disc	**TBA**	*Engine breather hose may be routed to a catch can; the resultant opening in the air box must be plugged.* **Any non-adjustable shock absorber is allowed. The shock must be installed in the original mounting locations. Remote shocks are not permitted. Threaded shock bodies or adjusters may be used.** **- Any spring up to a maximum spring rate of 500 pounds front and 800 pound rear may be used** **- Cold Air Intake system (pictures and/ or parts have to be sent to Topeka for approval)** **OEM Factory Limited Slip (member to supply part number to Topeka for approval)** **- OEM bump stops**
Ford Contour SVT (98-00)	82.4 x 79.5 2544	2705	1504 / 1486	16 x 6.5 Alum	1998: 205/55 99-00: 215/50	3.42, 2.14, 1.45, 1.03, 0.77	4.06	(F) 279 Disc (R) 251 Disc	3180	**Member to request re-classing car, required.**

Ford Focus ZX4 ST (05-06)	87.38 X 93.98 2300	2614	1496 / 1491	16 x 6	205/60	3.42, 2.14, 1.45, 1.03, 0.77	3.82	(F) 278 Vented Disc (R) 251 Solid Disc	**TBA**	*Engine breather hose may be routed to a catch can; the resultant opening in the air box must be plugged.* **Any non-adjustable shock absorber is allowed. The shock must be installed in the original mounting locations. Remote shocks are not permitted. Threaded shock bodies or adjusters may be used.** **- Any spring up to a maximum spring rate of 500 pounds front and 800 pound rear may be used** **- Cold Air Intake system (pictures and/ or parts have to be sent to Topeka for approval)** **OEM Factory Limited Slip (member to supply part number to Topeka for approval)** **- OEM bump stops**
Ford Mustang V6 (05-10)	100.4 x 84.4 4000	2724	1582.5 1587.5	16 x 7 17 x 8 (F&R)	245/40 (max tire size)	3.75, 2.19, 1.41, 1.00, 0.72	3.31	(F) 292.1 Vented Disc (R) 299.8 Vented Disc	3450	ABS (option code 552) allowed. FR3 Handling Pack # M-2007-FR3V6 allowed. The kit includes: Dampers M-18000-A, Lowering Springs M-5300-N, Sway Bars M-5490-C, Strut Tower Brace M-20201-F. The ECU may be re-flashed by a Ford dealer to disable the speed limiting function; a letter from the dealer stating that this, and only this change, has been made shall be made available to race officials on demand. Ford Positraction LSD part #M-4204-C75 is allowed. Panhard bar, part # BAR-M-4264-A permitted; must be set at same length as a stock bar, center mounting hole to center mounting hole +/- 0.25 inch. An alternative steel drive shaft is permitted; this drive shaft is otherwise unrestricted, but no modifications to other components are permitted to facilitate its installation.
Ford Mustang V-6 (01-04)	96.8 x 86.0 3797	2573	1529 / 1539	16 x 7.5 Alum	225/55	3.37, 1.99, 1.33, 1.00, 0.67	3.27		3240	Ford Positrac LSD, part # M-4204-C75, premium trim package 012A allowed (ABS, traction control, 16 x 7.5 forged or cast aluminum wheels).
Honda Accord LX & EX (03-05)	87.0 x 99.0 2354	2670	1552/ 1554	16 x 6.5	205/60	3.27, 1.77, 1.15, 0.87, 0.66	4.39	(F)282 Vented Disc (R)259 Solid Disc	**TBA**	LX model must use rear drum brakes. **Any non-adjustable shock absorber is allowed. The shock must be installed in the original mounting locations. Remote shocks are not permitted. Threaded shock bodies or adjusters may be used.** **- Any spring up to a maximum spring rate of 800 pounds may be used** **- Cold Air Intake system (pictures and/ or parts have to be sent to Topeka for approval)** **OEM Factory Limited Slip (member to supply part number to Topeka for approval)** **- OEM bump stopS**
Honda Accord LX & EX (06-07)	87.0 x 99.0 2354	2670	1553/ 1554	16 x 6.5	205/60	3.27, 1.77, 1.15, 0.87, 0.66	4.39	(F)282 Vented Disc (R)259 Solid Disc	**TBA**	**Any non-adjustable shock absorber is allowed. The shock must be installed in the original mounting locations. Remote shocks are not permitted. Threaded shock bodies or adjusters may be used.** **- Any spring up to a maximum spring rate of 800 pounds may be used** **- Cold Air Intake system (pictures and/ or parts have to be sent to Topeka for approval)** **OEM Factory Limited Slip (member to supply part number to Topeka for approval)** **- OEM bump stops**
Honda Accord LX-S/EX/EX-L (08-09)	87.0 x 99.0 2354	2741	1580 / 1580	17 x 7.5	225/50	3.27, 1.78, 1.15, 0.87, 0.65	4.39	(F) 282 Vented Disc (R) 282 Solid Disc	**TBA**	**Any non-adjustable shock absorber is allowed. The shock must be installed in the original mounting locations. Remote shocks are not permitted. Threaded shock bodies or adjusters may be used.** **- Any spring up to a maximum spring rate of 800 pounds may be used** **- Cold Air Intake system (pictures and/ or parts have to be sent to Topeka for approval)** **OEM Factory Limited Slip (member to supply part number to Topeka for approval)** **- OEM bump stops**

Honda Civic Coupe (96-00)	75.0 x 90.0 1590	2621	1476 / 1476	14 x 4.5	185/65	3.25, 1.90, 1.25, 0.91, 0.70	4.25	(F) 262 Vented Disc (R) 201 Drum	2500	Honda Motorsports performance package (#17D50-S02-C1) permitted. Performance kit includes: Shocks (F): Koni #8042-1001, Shocks (R): Koni #8042-1002, Springs (F): Eibach Kit #9328.140, 350# rate, Springs (R): Eibach Kit #9328.140, 500# rate, Swaybar (R): Neuspeed #H43.22.72, 22mm, Camber: +/- 2º from service manual specs, Wheels: Enkei #ENK13214649SM, 14 x 6".
Honda Civic Coupe Si (99-00)	81.0 x 77.4 1595	2621	1476 / 1476	15 x 6	195/55	3.23, 2.11, 1.46, 1.11, 0.85	4.4	(F) 262 x 20 Disc (R) 239 x 8 Disc	**TBA**	**Any non-adjustable shock absorber is allowed. The shock must be installed in the original mounting locations. Remote shocks are not permitted. Threaded shock bodies or adjusters may be used.** **- Any spring up to a maximum spring rate of 500 pounds may be used** **- Cold Air Intake system (pictures and/ or parts have to be sent to Topeka for approval)** **OEM Factory Limited Slip (member to supply part number to Topeka for approval)** **- OEM bump stops**
Honda Civic SI (02-03)	86.0 x 86.0 1998	2570	1468 / 1469	15 x 6.5 Alum	195/60	3.06, 1.77, 1.21, 0.92, 0.74	4.50	(F) 262 (R) 260	**TBA**	**Any non-adjustable shock absorber is allowed. The shock must be installed in the original mounting locations. Remote shocks are not permitted. Threaded shock bodies or adjusters may be used.** **- Any spring up to a maximum spring rate of 500 pounds may be used** **- Cold Air Intake system (pictures and/ or parts have to be sent to Topeka for approval)** **OEM Factory Limited Slip (member to supply part number to Topeka for approval)** **- OEM bump stops**
Honda Civic Si (06-09)	86.1 x 86.0 1998	2649	1499 / 1527	17 x 7 Alum	215/45	3.27, 2.13, 1.52, 1.15, 0.92, 0.66	4.77	(F) 300 Vented Disc (R) 260 Solid Disc	3000	Honda Factory Performance Suspension Kit #08W60-SVB-100 allowed.
Honda Civic Si (2012)	87.0 x 99.0 2354	2620 (2 dr) / 2670 (4 dr)	1499/ 1522	17 x 7 Alloy	215/45	3.27, 2.04, 1.43, 1.07, 0.83, 0.65	4.76	(F)300 x 25 Vented (R) 260 x 9 Solid	3000	39mm flat plate restrictor required. Honda Sport Suspension Kit, part number 08W60-TS9-100 permitted.
Hyundai Elantra GLS (11-12)	81.0 x 87.2 1797	2649	1550/ 1562	15 steel	195/65	3.62, 1.96, 1.29, 1.02, 0.87, 0.76	4.33	(F) 280x23 Vented (R) 262x10 Solid	2600	16 inch or 17 inch alloy wheels permitted. 205/55/16 or 215/45/17 tires permitted. **Member to request re-classing car, required.**
Hyundai Tiburon V-6 (03-08)	86.7 x 75.0 2657	2530	1490 / 1490	17 x 7 Alum	215/45	3.15, 1.94, 1.33, 1.06, 0.86, 0.70	4.43	(F) 280 x26.2 Vented Disc (R) 257x10.0 Solid	**TBA**	*Accusump permitted.* **Any non-adjustable shock absorber is allowed. The shock must be installed in the original mounting locations. Remote shocks are not permitted. Threaded shock bodies or adjusters may be used.** **- Any spring up to a maximum spring rate of 500 pounds front and 800 pound rear may be used** **- Cold Air Intake system (pictures and/ or parts have to be sent to Topeka for approval)** **OEM Factory Limited Slip (member to supply part number to Topeka for approval)** **- OEM bump stops**
Kia Forte Koup and Sedan LX/ EX (2010-)	86.0 x 86.0 1998	2649	1560/ 1565	17 x 6 Alloy	205/55	3.31, 1.97, 1.19, 0.90, 0.70	4.19	(F) 280 Vented (R) 262 Solid	2790	**Member to request re-classing car, required.**
Kia Forte Koup and Sedan SX (2010-)	88.0 x 97.0 2359	2649	1560/ 1565	17 x 7 Alloy	215/45	3.27,1.93, 1.64, 1.22, 1.03, 0.83	4.06 (1, 2) 2.96 (3, 4, 5, 6)	(F) 300 Vented (R) 262 Solid	3170	**Member to request re-classing car, required.**

Mazda3 s (04-09)	87.5 x 94.0 2260	2639	1529 / 1514	16x6.5 or 17x6.5	205/50 or 205/55	3.31, 1.84, 1.31, 0.97, 0.76	4.1	(F) 300 Vented DIsc (R) 280 Solid Disc	**TBA**	ABS option allowed. Miata speedometer gear #M527-17-400A permitted. **Any non-adjustable shock absorber is allowed. The shock must be installed in the original mounting locations. Remote shocks are not permitted. Threaded shock bodies or adjusters may be used.** **- Any spring up to a maximum spring rate of 500 pounds front and 800 pound rear may be used** **- Cold Air Intake system (pictures and/ or parts have to be sent to Topeka for approval)** **- OEM bump stopS**
Mazda3 s (2010)	89.0 x 100.0 2489	2640	1530 / 1514	17 x 7	205/50	3.45, 2.06, 1.39, 1.03, 0.84, 0.72	4.11	(F)300 Vented Disc (R)280 Solid Disc	**TBA**	**Any non-adjustable shock absorber is allowed. The shock must be installed in the original mounting locations. Remote shocks are not permitted. Threaded shock bodies or adjusters may be used.** **- Any spring up to a maximum spring rate of 500 pounds front and 800 pound rear may be used** **- Cold Air Intake system (pictures and/ or parts have to be sent to Topeka for approval)** **- OEM bump stops**
~~Mazda MX-5 / Miata (01-05)~~	~~83.0 x 85.0 1839~~	~~2266~~	~~1435 / 1461~~	~~15 x 6.5 Alum~~	~~195/50~~	~~3.14, 1.89, 1.33, 1.00, 0.81~~	~~4.3~~	~~(F) 254 Vented Disc (R) 252 Solid Disc~~	~~2700~~	
Mazda Protégé LX (01-03)	83.0 x 92.0 1991	2610		15 x 6 Alum		3.31, 1.84, 1.31, 0.97, 0.76	4.11	(F) 259 x 23 Vented Disc (R) 201 x 36 Drum	2730	LX may update to the ES brakes. May update to MP3 specs. **Member to request re-classing car, required.**
Mazda Protégé ES (99-00)	83.0 x 85.0 1839	2611	1471 / 1471	15	195/55	3.42, 1.84, 1.29, 1.03, 0.78	4.11	(F) 260 Vented Disc (R) 201 Drum	2630	Mazda Performance Package P/N K-PRO-99-SSC (Includes: Bilstein strut cartridges front and rear (p/n P30-0032), Eibach 2.5" diameter ERS springs front (325lbs, 7" free length) and rear (600lbs, 8" free length), front negative camber –2 degrees.) ABS brakes permitted. **Member to request re-classing car, requireD.**
Mazda Protégé ES (01-03)	83.0 x 92.0 1991	2610		16 x 6 Alum		3.31, 1.84, 1.31, 0.97, 0.76	4.11	(F) 259 x 23 Vented Disc (R) 259 x 23 Vented Disc	2730	May update to MP3 specs. **Member to request re-classing car, required.**
Mazda Protégé MP3 (2001)	83.0 x 92.0 1991	2610	1455 / 1460	17 x 7 Alum	205/45	3.31, 1.84, 1.31, 0.97, 0.76	4.11	(F) 10.2 x .9 Vented Disc (R) 10.3 x .9 Solid Disc	2780	**Member to request re-classing car, required.**
Mazda Protégé 5 (02-03)	83.0 x 92.0 1991	2610	1465 / 1470	16 x 6 Alum	195/50	3.31, 1.84, 1.31, 0.97, 0.76	4.11	(F) 10.2 x .9 Vented Disc (R) 10.3 x .4 Solid Disc	2745	**Member to request re-classing car, required.**
Mazda RX-8 (04-08)	2600	2703	TBA	18 X 8 (F&R)	225/45 (F&R)	3.76, 2.27, 1.65, 1.19, 1.0, 0.84 Alt: 3.82, 2.26, 1.54, 1.18, 1.00, 0.79	4.44 Alt: 4.78	(F) 323 Vented Disc (R) 303 Vented Disc	3220	Mazdaspeed radiator #0000-01-8501 allowed. ~~Mazdaspeed front sway bar kit #0000-04-8302-AD allowed. Mazdaspeed coil spring kit #QSEA-34-01Z allowed.~~ Use of 2009 R3 transmission is permitted with alternate gear ratios as listed. R3 transmission must be paired with the listed alternate final drive. ~~**Mazda Motorsports Exhaust Header Part # 0000-06 and Mazda Motorsports Air Intake Part # 0000-06-8601.**~~
Mazda RX-8 R3 (2009)	2600	2703	TBA	19 x 8 (F&R)	225/40 (F&R)	3.82, 2.26, 1.54, 1.18, 1.00, 0.79	4.78	(F) 323 Vented Disc (R) 303 Vented Disc	3220	~~**Mazda Motorsports Exhaust Header Part # 0000-06 and Mazda Motorsports Air Intake Part # 0000-06-8601.**~~

Mazda MX-5 / Miata Sport (99-00)	83.0 x 85.0 1839	2266	1435 / 1461	15 X 6	195/50	3.14, 1.89, 1.33, 1.00, 0.81	4.3	(F) 255 Vented Disc (R) 252 Solid Disc	2380	Rear interior brace may be removed for cage installation. As delivered w/ no performance kits or parts deletions. Detachable hardtop shall be installed (latches shall be replaced with positive fasteners), convertible top shall be removed. Spec Miata front and rear sway bar permitted. Rear sway bar must use middle hole. Allow Spec Miata suspension kit with the following perch measurements: Front: top-1.75" bottom-1.75" Rear: top-1.50" bottom-2.00" Measurements are taken from above(top)/below(bottom) the spring perch to the top/bottom of the collar. Spring perch settings must be locked with the set screw.
Mazda MX-5 / Miata (01-05)	83.0 x 85.0 1839	2266	15" wheel: 1435 / 1461 16" wheel: 1448 / 1474	16 x 6.5 Alum	15": 195/50 16": 205/45	3.14, 1.89, 1.33, 1.00, 0.81	4.3	(F) 254 Vented Disc (R) 252 Solid Disc Suspension Package: (F) 269.5 Vented Disc (R) 267.9 Solid DisC	2405	Factory "Sports" pkg. allowed. Optional Torsen limited slip differential allowed. Power steering delete option allowed. Detachable hardtop shall be installed (latches shall be replaced with positive fasteners), convertible top shall be removed. Spec Miata front and rear sway bar permitted. Rear sway bar must use middle hole. Allow Spec Miata suspension kit with the following perch measurements: Front: top-2.00" bottom-1.50" Rear: top-1.75" bottom-1.75" Measurements are taken from above(top)/below(bottom) the spring perch to the top/bottom of the collar. Spring perch settings must be locked with the set screw. **Any non-adjustable shock absorber is allowed. The shock must be installed in the original mounting locations. Remote shocks are not permitted. Threaded shock bodies or adjusters may be used.** **- Any spring up to a maximum spring rate of 500 pounds front and 500 pound rear may be used**
Mazda MX-5 (06-08)	87.38 x 83.06 1999	2329	1491 / 1496	16 x 6.5 17 x 7 Alum	205/50	3.14, 1.89, 1.33, 1.00, 0.81 or 3.82, 2.26, 1.64, 1.18, 1.00, 0.83	4.10	(F) 289.6 Vented Disc (R) 279.4 Solid Disc	MSR: 2600 Non-MSR: 2500	Detachable hardtop shall be installed (latches shall be replaced w/ positive fasteners), convertible top shall be removed. Factory bolt-in roll bar/cross member may be removed to facilitate roll cage installation. MSR option permitted.
Mazda MX-5 Touring/ Grand Touring (09-11)	87.4 x 83.1 2000	2330	1491/ 1497	17x7 Alum	205/45	3.82, 2.26, 1.64, 1.18, 1.00, 0.83	4.10	(F)290 Vented Disc (R)280 Solid Disc	**TBA**	~~**Optional suspension package permitted. MSR option permitted including Bilstein shocks (F) 0000-04-5991-BL, (R) 0000-04-5992-BL.**~~ **Any non-adjustable shock absorber is allowed. The shock must be installed in the original mounting locations. Remote shocks are not permitted. Threaded shock bodies or adjusters may be used.** **- Any spring up to a maximum spring rate of 500 pounds front and 800 pound rear may be used** **- Cold Air Intake system (pictures and/ or parts have to be sent to Topeka for approval)** **- OEM bump stops**
Mazda6 s (03-07)	89.0 x 79.5 2967	2675	1530 / 1520	16 x 7 17 x 7 18 x 7	205/60 215/45	3.80, 2.13, 1.36, 0.94, 0.69	3.71	(F) 282 Vented Disc (R) 280 Solid Disc	**TBA**	~~**Rear sway bar: Mazdaspeed #GRMS-8M-L06-R and front sway bar #GRMS-8M-L06-F permitted.**~~ **Any non-adjustable shock absorber is allowed. The shock must be installed in the original mounting locations. Remote shocks are not permitted. Threaded shock bodies or adjusters may be used.** **- Any spring up to a maximum spring rate of 500 pounds front and 800 pound rear may be used** **- Cold Air Intake system (pictures and/ or parts have to be sent to Topeka for approval)** **- OEM bump stops**

Mini Cooper S (02-04)	77.0 x 85.8 1598	2467	1453 / 1461	Any stock wheel available allowed. Must have BMW or MINI identification. Entrant must supply proof that wheel was offered in USA from MINI in the form of a factory document.	195/55 or 205/55	4.17, 2.62, 1.97, 1.61, 1.33, 1.09	2.74	(F) 277 Vented DIsc (R) 259 Solid Disc	**TBA**	**~~JCW struts (F)31-31-6-768-410 (R)33-52-6-768-412, springs (F)31-33-6-768-415 (R)33-53-6-768-418, and Mini Mania strut tower plate NMS7300 permitted. Factory limited slip from 05-06 Cooper S permitted. Ireland Engineering Mini Cooper Fixed Camber Plates 4/2002-2006 part "minicamber" permitted.~~** **Any non-adjustable shock absorber is allowed. The shock must be installed in the original mounting locations. Remote shocks are not permitted. Threaded shock bodies or adjusters may be used.** **- Any spring up to a maximum spring rate of 500 pounds front and 800 pound rear may be used** **- Cold Air Intake system (pictures and/or parts have to be sent to Topeka for approval)** **- OEM bump stops**
Mini Cooper S (05-06)	77.0 x 85.8 1598	2467	1453 / 1461	Any stock wheel available allowed. Must have BMW or MINI identification. Entrant must supply proof that wheel was offered in USA from MINI in the form of a factory document.	195/55 or 205/55	overall: 12.79, 7.79, 5.65, 4.62, 3.83, 3.13	N/A	(F) 277 Vented DIsc (R) 259 Solid Disc	2750	**~~Convertible model not allowed. Factory optional limited slip differential allowed. JCW struts (F)31-31-6-768-410 (R)33-52-6-768-412, springs (F)31-33-6-768-415 (R)33-53-6-768-418, and Mini Mania strut tower plate NMS7300 permitted. Ireland Engineering Mini Cooper Fixed Camber Plates 4/2002-2006 part "minicamber" permitted.~~** **Any non-adjustable shock absorber is allowed. The shock must be installed in the original mounting locations. Remote shocks are not permitted. Threaded shock bodies or adjusters may be used.** **- Any spring up to a maximum spring rate of 500 pounds front and 800 pound rear may be used** **- Cold Air Intake system (pictures and/or parts have to be sent to Topeka for approval)** **- OEM bump stops**
Mitsubishi Eclipse GT (00-05)	91.2 x 75.9 2972	2561	1509 / 1509	17 x 6.5	215/50	3.33, 2.10, 1.41, 1.03, 0.76	3.74	(F) 277 x 23 Vented Disc (R) 262 x 11 Solid Disc	3170	**Member to request re-classing car, required.**
Nissan Sentra Spec-V (07-08)	89.0 x 100.0 2488	2535	1466 / 1446	17 x 7 Alum	225/45	3.15, 1.94, 1.39, 1.06, 0.81, 0.63	4.13	(F) 305 Vented Disc (R) 278 Solid Disc	**TBA**	Factory Brembo brakes allowed. OEM optional limited slip differential permitted. **Any non-adjustable shock absorber is allowed. The shock must be installed in the original mounting locations. Remote shocks are not permitted. Threaded shock bodies or adjusters may be used.** **- Any spring up to a maximum spring rate of 500 pounds front and 800 pound rear may be used** **- Cold Air Intake system (pictures and/or parts have to be sent to Topeka for approval)** **- OEM bump stops**
Nissan Sentra SER (02-03)	89.0 x 100.0 2488	2535	1476 / 1455	16 x 6	195/55	3.15, 1.84, 1.26, 0.95, 0.77	4.133	(F) 280 x 22 Vented Disc (R) 258 x 9 Solid Disc	**TBA**	**Any non-adjustable shock absorber is allowed. The shock must be installed in the original mounting locations. Remote shocks are not permitted. Threaded shock bodies or adjusters may be used.** **- Any spring up to a maximum spring rate of 500 pounds front and 800 pound rear may be used** **- Cold Air Intake system (pictures and/or parts have to be sent to Topeka for approval)** **- OEM bump stops**
Nissan Sentra SER Spec-V (02-04)	89.0 x 100.0 2488	2535	1466 / 1446	17 x 7 Alum	215/45	3.15, 1.94, 1.39, 1.06, 0.81, 0.63	4.13	(F) 280 x 22 Vented Disc (R) 232 x 7 Solid Disc	**TBA**	**Any non-adjustable shock absorber is allowed. The shock must be installed in the original mounting locations. Remote shocks are not permitted. Threaded shock bodies or adjusters may be used.** **- Any spring up to a maximum spring rate of 500 pounds front and 800 pound rear may be used** **- Cold Air Intake system (pictures and/or parts have to be sent to Topeka for approval)** **- OEM bump stops**

Pontiac Firebird V-6 (96-02)	96.5 x 86.36 3790	2568	1542 / 1539	16 x 8	245/50	3.75, 2.19, 1.41, 1.00, 0.72	3.42	(F) 302 x 23 Disc (R) 305 x 25 Disc	3300	Performance option permitted, consisting of limited slip differential, uplevel steering rack, dual exhaust. GM PS cooler #10417037 allowed. Z-28 front sway bar (30mm) and rear sway bar (19mm) allowed. GM 1LE front (#26032907 32mm) and rear (#10021221 21 mm) sway bar allowed
Pontiac Solsitce (06-09)	88.0 x 98.0 2384	2415	1543 / 1561	18 x 8 Alum	245/45	3.75, 2.26, 1.37, 1.00, 0.73 or 3.75, 2.26, 1.51, 1.00, 0.73	3.91	(F) 296 Vented Disc (R) 278 Solid Disc	2900	Detachable hardtop GM part # PCS-0664 shall be installed (latches shall be replaced w/ positive fasteners), convertible top shall be removed. Limited slip differential (G80), factory ABS (JL), and suspension option (ZOK) allowed. **Cold Air Intake system (pictures and/ or parts have to be sent to Topeka for approval)**
Saturn SC2 Coupe (97-00)	82.0 x 90.0 1901	2601	1443 / 1422	15	195/60	3.25, 2.06, 1.42, 1.03, 0.73	4.06	(F) 251 Disc (R) 245 Disc (R) 200 x 30 Drum	2475	Saturn SSC performance package (SPS # PKG-SSC-9798). Performance kit includes: Shocks (F): Carerra #54165/31552B4, Shocks (R): Carerra #54166/32642B4, Springs (F): H&R #54341F, Springs (R): H&R #54341R, Swaybar (R): Sway-Away #19516, Camber: -2.5 Degrees max. (F&R), Wheels: .250" max. wheel spacer per wheel. ABS brakes permitted. **Member to request re-classing car, required.**
Saturn SC2 Coupe (01-03)	82.0 x 90.0 1901	2601	1443 / 1422	15	195/60	3.25, 2.06, 1.42, 1.03, 0.73	4.06	(F) 251 Disc (R) 245 Disc (R) 200 x 30 Drum	2300	ABS brakes permitted. **Member to request re-classing car, required.**
Saturn SL2 (97-00)	82.0 x 90.0 1901	2601	1443 / 1422	15	185/65 205/50 (max)	3.25, 2.06, 1.42, 1.03, 0.73	4.06	(F) 251 Disc (R) 245 Disc (R) 200 x 30 Drum	2560	Saturn SSC performance package (SPS # PKG-SSC-9798). Performance kit includes: Shocks (F): Carerra #54165/31552B4, Shocks (R): Carerra #54166/32642B4, Springs (F): H&R #54341F, Springs (R): H&R #54341R, Swaybar (R): Sway-Away #19516, Camber: -2.5 Degrees max. (F&R), Wheels: .250" max. wheel spacer per wheel. ABS brakes permitted. A max. tire size of 205/50 is permitted based on availability of performance tires; this max. size supersedes SS tire rule in SSCS section 9.1.7.E.**7.** **Member to request re-classing car, required.**
Saturn SL2 (01-03)	82.0 x 90.0 1901	2601	1443 / 1422	15	185/65	3.25, 2.06, 1.42, 1.03, 0.73	4.06	(F) 251 Disc (R) 245 Disc (R) 200 x 30 Drum	2560	ABS brakes permitted. **Member to request re-classing car, required.**
Scion tC (03-07)	88.5 x 96.0 2326	2700	1506 / 1506	17 x 7 Alum	215/45	3.54, 2.05, 1.33, 0.97, 0.78	4.24	(F) 275 Vented Disc (R) 269 Solid Disc	2900	**Member to request re-classing car, required.**
Subaru Impreza (non-turbo) (04-06)	99.5 x 79.0 2457	2524.8	1485.9 1480.9	16 x 6.5 (F&R)	205/55 (F&R)	3.45, 2.06, 1.45, 1.09, 0.78	4.11	(F) 274.3 Vented Disc (R) 261.6 Solid Disc	3135	**Member to request re-classing car, required.**
Subaru Impreza (2008-11)	99.5 x 79.0 2457	2620	1495/ 1495	16 x 6.5 Alloy	205/55	3.45, 2.06, 1.45,1.09, 0.78	3.90	(F) 255 x24 Vented (R) 280 x10 Solid	3150	**Member to request re-classing car, required.**

Toyota Celica GTS (00-05)	*82.0 x 85.0 1796*	*2598*	*1488/ 1478*	*16 x 7 Alloy*	*205/50*	*3.17, 2.05, 1.48, 1.17, 0.92, 0.73*	*4.53*	*(F) 280 Vented (R) 262 Solid*	**TBA**	*~~TRD Shocks/Springs Part #PTR11-20000-05 permitted.~~ TRD Sway Bars Part #PTR06-20002-01 permitted. TRD Limited Slip Part #41301-ST804. ABS option allowed Canton Accusump #24-026, install sandwitch #24-700, valve #24-260, and related hoses and brackets allowed.* **Any non-adjustable shock absorber is allowed. The shock must be installed in the original mounting locations. Remote shocks are not permitted. Threaded shock bodies or adjusters may be used.** **- Any spring up to a maximum spring rate of 800 pounds may be used** **- Cold Air Intake system (pictures and/ or parts have to be sent to Topeka for approval)** **- OEM bump stops**
Toyota MR-2 Spyder 16V DOHC (01-05)	2001: 79.0 x 91.5 1794 02-03: 81.0 x 77.0 1587	2450	1475 / 1460	01-02: (F) 15 x 6 (R) 15x6.5 03-05: (F) 15 x 6 (R) 16 x 7	(F) 185/55 01-02(R) 205/50 03-05(R) 215/45	3.17, 1.90, 1.39, 1.03, 0.82	3.25		**TBA**	Detachable hardtop shall be installed (latches shall be replaced w/ positive fasteners), convertible top shall be removed. **Any non-adjustable shock absorber is allowed. The shock must be installed in the original mounting locations. Remote shocks are not permitted. Threaded shock bodies or adjusters may be used.** **- Any spring up to a maximum spring rate of 500 pounds may be used** **- Cold Air Intake system (pictures and/ or parts have to be sent to Topeka for approval)** **- OEM bump stops**
Toyota Matrix Matrix XRS (03-08)	82.1 x 85.1 1795	2601	1519 / 1497	17 Alum	215/50	3.17, 2.05, 1.48, 1.17, 0.92, 0.72	4.5	(F) 331 Vented Disc (R) 356 Solid Disc	2905	**Member to request re-classing car, required.**

Class 4:

All Cars in class permitted the following changes:

- This class will consist of mainly B-Spec cars (some ex-SSC cars).
- No interiors.
- Any non-adjustable shock/strut and 500 lbs springs.
- B-Spec ECU reflash permitted (manufacturer approved flash). Non-B-Spec cars will use OEM flash.
- B-Spec wheels 15 x 7. Non-B-Spec cars will use OEM sizes.
- B-Spec Tires 205/50/15. Non-B-Spec cars will use OEM tire size, section increase of 10 or 20 mm, aspect +/- 5 or 10.

CLASS 4	Bore x Stroke (mm) Displacement (cc)	Wheelbase (mm)	Track F & R (mm)	Gear Ratios	Final Drive	Brakes (mm)	Weight (lbs)	Notes:
Chevrolet Sonic (2012)	80.5 x 88.2 1796	99.4	59.4/59.4	3.73, 2.14, 1.41, 1.12, 0.89	3.94	(F)10.8 (R) 9.0 drum	2800	31mm Flat Plate Restrictor.
Fiat 500 (2012)	72.0 x 84.0 1368	90.6	55.4/55.0	3.91, 2.16, 1.35, 0.98, 0.77	3.73	(F) 10.1 x 0.9 (R) 9.4 x 0.4	2280	Fiat suspension kit P5154820, Front main spring P5154821, Front damper assy with top mount P5154822, Rear main spring P5154823, Rear damper assy P5154824, Rear coil spring adapt kit P5154825,
Ford Fiesta (4-dr) (11-12)	79.0 x 81.4 1596	98	57.7/57.7	3.86, 2.04, 1.28, 0.95, 0.74	4.07	(F) 10.2 (R) 7.9 drum	2575	34mm Flat Plate Restrictor. Suspension kit: #M-FR3-FASB
Honda Fit (09-12)	73.0 x 89.55 1499	98.4	58.7/58.1	*3.31, 1.87, 1.30, 0.95, 0.73*	*4.62*	(F) 10.3 (R) 7.9 drum	2500	34mm Flat Plate Restrictor. Damper and spring set 51600F23SA100, Damper FR LH 51605F23SA100, Damper FR RH 51606F23SA100, Damper RR 52610F23SA100, Spring FR (325) 51401F23SA100, Spring RR (350) 52441F23SA300, Helper spring 52442FC4YA000, Spring spacer 52443FC4YA000, Spring adjust assy RR 52691F23SA010. Seat upper FR spring 51688F23SA200,

Kia Rio 5-door (2012)	77.0 x 85.44 1591	101.2	59.9/60.0	3.76, 2.04, 1.28, 1.03, 0.89, 0.77	3.83	(F) 10.1 x 0.9 (R) 10.3 x 0.4	2600	23mm Flat Plate Restrictor. AKSJ03-10-001 Damper Frt Assembly; KSJ03-10-002 Spring _Eibach 0600.0225.500; KSJ03-10-003 Spring Spacer ; AKSJ03-20-001 Damper-AST-Rear; KSJ03-20-002 Rear Spring Eibach 0600.0250.500; KSJ03-20-003 Rear Upper Spring Perch Delrin; KSJ03-20-004 Rear Spring Spacers-Aluminum; KSJ03-20-005 Rear Spring Spacer Intermediate; AKSJ03-60-001 Sump Pan Extension
Mazda2 (11-12)	78.0 x 83.0 1499	98	58.1/57.7	3.42, 1.84, 1.29, 0.97, 0.78	3.85	(F) 10.1 (R) 8.0 drum	2300	Coil over shock kit (Bilstein) 0000-04-2201-BL, Front springs (ERS) 0000-04-9350-07, Rear springs (ERS) 0000-04-9250-07, Helper springs F&R 0000-04-9926, Spring spacer F&R 0000-04-9925, Front sway bar end links adjustable 0000-04-2202, Rear sway bar 0000-04-2203-RR, Modified strut bearing plate 0000-04-2204, Crash bolt set 0000-04-2205,
MINI Cooper (07-12)	77.0 x 85.8 1598	97.1	57.4/57.8	3.21, 1.79, 1.19, 0.91, 0.78, 0.68	4.35	(F) 11.0 (R) 10.2	2600	33mm Flat Plate Restrictor. L/F Strut-spring assembly 31 31 1 126, R/F Strut-spring assembly 31 31 1 125, Rear Shock-spring assembly 33 50 1 125,
Nissan Versa (07-11)	80.4 x 81.1 1797	102.4	58.3/58.5	3.73, 2.11, 1.45, 1.17, 0.97, 0.81	3.93	(F) 11.02 x 0.95 (R) 9.0 drum	2750	35mm Flat Plate Restrictor.
Nissan Versa (09-11)	78.0 x 83.6 1598	102.4	58.3/58.5	3.73, 2.05, 1.39, 1.03, 0.89	4.07	(F) 10.2 x 0.87 (R) 8.0 drum	2500	
Nissan Versa (2012)	78.0 x 83.6 1598	102.4	58.3/58.5	3.73, 2.05, 1.39, 1.03, .089	4.07	(F) 10.2 x 0.87 (R) 8.0 drum	2490	
Toyota Yaris (07-12)	74.9 x 84.6 1491	96.9	58.3/57.9	3.55, 1.90, 1.31, 0.97, 0.82	3.72	(F) 10.0 (R) 7.9 drum	2420	
Acura Integra LS/ (3 or 4 door) (95-01)	81.0 x 87.2	2571	1476 / 1471 .	3.23, 1.90, 1.36, 1.03, 0.79	4.4	(F) 262 x 21 Vented Disc (R) 239 x 10 Solid Disc	**TBA**	**-Interiors may be removed -Must compete in Showroom Stock configuration**
Ford Focus ZX-3 (00-03)	84.0 x 88.0 1988	2616	1494 / 1486	3.67, 2.14, 1.45, 1.03, 0.77	3.82	(F) 259 x 23 Vented Disc (R) 203 x 31 Drum	**TBA**	***Engine breather hose may be routed to a catch can; the resultant opening in the air box must be plugged.*** **-Interiors may be removed -Must compete in Showroom Stock configuration**
Honda Civic Coupe (96-00)	75.0 x 90.0 1590	2621	1476 / 1476	3.25, 1.90, 1.25, 0.91, 0.70	4.25	(F) 262 Vented Disc (R) 201 Drum	**2500**	~~**Honda Motorsports performance package (#17D50-S02-C1) permitted. Performance kit includes: Shocks (F): Koni #8042-1001, Shocks (R): Koni #8042-1002, Springs (F): Eibach Kit #9328.140, 350# rate, Springs (R): Eibach Kit #9328.140, 500# rate, Swaybar (R): Neuspeed #H43.22.72, 22mm, Camber: +/- 2º from service manual specs, Wheels: Enkei #ENK13214649SM, 14 x 6".**~~ **-Interiors may be removed -Must compete in Showroom Stock configuration**

Ozment presented a proposal to alter the payment of sanction fees and insurance to post event. The purpose is to simplify processing and ease cash flow and reporting for regions.

MOTION: Modify GCR section 3.3.2.B to read: Appropriate sanction fee to be paid within 14 days of the completion of the event with the event insurance audit. Modify Appendix B.2.1.**Event related fees**

A. Sanction Fee

The sanction fee listed on the sanction application must be paid within **14 days of the completion of the event**.

H. Insurance Fee

The appropriate premium must be sent to the SCCA for mandatory event insurance coverage **within 14 days of the completion of the event**. The fee schedule is available from the SCCA National Office, or on the SCCA

website.Kephart/McCarthy. **PASSED unanimously**.

There was a GCR Review regarding conduct of events as it relates to the Majors. There are items that could be changed to allow more flexibility for Divisions/Regions on running races. Review of GCR event conduct was restricted to things that were Majors related. Board agreed that it needed to follow process of GCR committee to vet and recommendation to CRB which would come back for Board approval.

MOTION: in an effort to empower the Regions to have more flexibility in event scheduling, the BoD recommends to the Club Racing Board that the following GCR items be considered for implementation for 2013. Langlotz/Butler**.** **PASSED unanimously**.

3.1.1. A. There shall be at least 5 race groups.
GCR 3.5.2 defines how to compose Race Groups there for above should not be needed. Delete

3.1.1.B.4 National practice may be combined with Regional practice and qualifying; however, National qualifying may not be combined with Regional practice or qualifying.
Not relevant since the invention of rationals, Delete.

3.9.1. Division Championships
At the conclusion of each calendar year's season of National races, the SCCA designates a champion in each Division for each National class, based on the criteria outlined below.
3.9.1.A The number of National races a driver may enter is unlimited, but the Division Championship is based on points earned by a driver for his best 7 National race finishes in the same class. No more than 3 of the best 7 race finishes may be outside his Division of Record (See 3.9.1.F.2.)
The committee recommends that the Division be able to determine the method for choosing how divisional champions are crowned in 3.9.1.A.
Any division desiring an alternate method of choosing champions must submit to the national office the agreed upon plan by December 1st of the previous year for approval of by the Vice President of Club Racing. Any alternate method shall only be approved if it rewards the best and most qualified competitors. Approved Divisional Championships shall be posted at SCCA's official website by January 1st. Above dates subject to change during vetting.
5.9.3. Impound
C. ….For each impounded car, the weight and at least 2 other items appropriate for the class will be inspected, as agreed upon by the Chief Steward and the Chief Technical Inspector. … The committee recommends the two item requirement be dropped for nationals. With uneven resources available to the regions this leads to things like sock checks that do little to help our image.

8.3.1. How to Protest
D. be accompanied by a fee of $50, if at a National race; $25 if at a Regional race or Drivers' School. These fees may be returned to the protestor at the discretion of the SOM. Recommend fee be set at a universal $25.

App B, 1.2.B. In conflicts involving a non-spectator and a spectator race, preference will be given to the spectator races. Drop No longer relevant.
App B, C. Wherever possible, avoid scheduling National Championship races on consecutive weekends. Delete
App B, H. A Double National is defined as 2 National races at the same facility within a contiguous 3-day period. Double National races will be run under the following conditions:
1. No more than 1/4 of the regions within in the division object.
Suggested this be changed to simple majority of the racing regions in a division.

2. Should be held on a 3-day National holiday weekend and should be a 3-day event. Delete

App B, I. The Club Racing Department, working with each Divisional Executive Steward, and the Area Director, is to establish the ratio of driver's schools to Nationals for each racing division. Delete
App B, J. Principal SCCA Club events will not be scheduled on National Convention dates. Delete
App B, 1.3. Exceptions to Scheduling Policies
Requests for exceptions to the above scheduling policies shall be made in writing to the Manager of Club Racing and to the Divisional Scheduling Representative. Their recommendation requires the approval of the Chairman of the Club Racing Board. Delete second sentence, should be staff function.

CLUB RACING BOARD

SCCA Club Racing Board Minutes | June 5, 2012

The Club Racing Board met by teleconference on June 5, 2012. Participating were Jim Wheeler, Chairman; Chris Albin, Fred Clark, Jim Drago, Peter Keane, Mirl Swan, Tony Ave, and Pam Richardson, secretary. Also participating were: Todd Butler and Richard Patullo, BoD liaisons; Terry Ozment, Vice President of Club Racing; Doug Gill, General Manager, Technical Services Department; and John Bauer, Technical Manager, Club Racing. Bob Dowie participated as a guest. The following decisions were made:

SUGGESTED RULES FOR 2013

The following subjects will be referred to the Board of Directors for approval. Address all comments, both for and against, to the Club Racing Board. It is the BoD's policy to withhold voting on a rules change until there has been input from the membership on the presented rules. Member input is suggested and encouraged. Please send your comments via the form at www.clubracingboard.com.

GCR

1. #7801 (Betsy Speed) Use of #1 in national races. Thank you for your letter. Modify GCR 9.3.28.A: The numeral "1" shall be exclusively reserved for the current national champion in each class for national events. *The numeral "1" will be reserved until the end of the period for submitting advanced or pre-event entries, and then will be released.* If 2 or more national champions are entered in the same run group, the first to ~~register~~ *enter* shall have preference.

Add to GCR: 5.6. Registration assigns the car numbers for all cars entered in the event. *See 9.3.28.A.*

FORMULA/SPORTS RACING

None.

GRAND TOURING

None.

SUPER TOURING

None.

IMPROVED TOURING

None.

PRODUCTION

None.

AMERICAN SEDAN

1. #8415 (AS Committee) Proposed 2013 AS rules

The ASAC submits the rule set found at http://scca.cdn.racersites.com/prod/assets/Proposed2013ASRules.pdf as a proposed rule set for American Sedan in 2013. This rule set is re-organized for clarity and includes a complete set of rules for both Full Preparation and Restricted Preparation cars. The CRB is actively seeking feedback on this proposed rule set. Please send all feedback through the CRB letter system at crbscca.com. The goal of this effort is to not change existing Full Preparation rules (except for minor tweaks) but to introduce Restricted Preparation rules into the mainstream American Sedan rules package. Restricted Preparation cars will therefore no longer be tied to Touring rules.

2. #8416 (AS Committee) Proposed 2013 AS Specification Lines

The ASAC submits the specification lines found at http://scca.cdn.racersites.com/prod/assets/Proposed2013ASSpecLines.pdf as proposed specification lines for American Sedan in 2013. These specification lines go with the rule set attached in letter #8415. The CRB is actively seeking feedback on this proposed specification line set. Please send all feedback and suggestions through the CRB letter system at crbscca.com.

SHOWROOM STOCK

None.

SPEC MIATA

None.

TOURING

None.

WHAT DO YOU THINK?
None.

MEMBER ADVISORIES
None.

NOT APPROVED BY THE CRB
GCR
1. #7775 (Stephen Hyatt) Dedicated Divisional Administrators
Thank you for your letter. The SCCA Operations Manual specifies that the Executive Steward will appoint Divisional Administrators for particular specialties. It does not require that there be a DA for a specialty of a particular number of participants, nor does it preclude consolidating specialties under one DA. The Operations Manual also requires that the Executive Steward's DA appointments must be approved by the Area Director(s). The person you need to be talking to regarding any issues related to DA appointments and the skill sets of those appointees is your Executive Steward. He/she is tasked with the responsibility to manage the effort for your division.

Formula/Sports Racer
F5
1. #8306 (Chris Huskamp) E&O Carb Boot Number to be incorporated for June Sprints
Thank you for your request. Please see letter #8305.

2. #8307 (Chris Huskamp) E&O Carb Boot Number to be incorporated for June Sprints
Thank you for your request. Please see letter #8305.

FV
1. #7689 (Stephen Saslow and Various (57 letters)) Minimum Weight Increase
Thank you for your request. The CRB has no plans to raise the minimum weight for FV, after receiving member input against such a change 2 to 1.

2. #8240 (Derek Harding) Billet Cylinder Heads
Thank you for your input. While the FV cylinder head is no longer being manufactured the supply has not been depleted to the point that it is necessary to approve a new manufacturer/manufacturing process i.e. billet machined. When the time comes for a new supplier the requirement will be for a cast head like the original as opposed billet machined.

GT
GT2
1. #8154 (Ron Tambourine) Eliminate Bodywork wieght penalty
Thank you for your request. The CRB believes the weight penalty is correct for this bodywork which does not conform to the GTCS.

GTL
1. #8123 (Wilson Wright Jr) sir
Thank you for your letter. Currently all 1400 cc 2v X-flow engines are restricted with an SIR.

2. #8124 (Wilson Wright Jr) dir
Thank you for your letter. Currently all 1500cc 2v X-flow engines are restricted with an SIR.

ST
STU
1. #7601 (Cheyne Daggett) Classify the 11/12 Mustang V6 in STU
Thank you for your request. The CRB has no plans to add this car to STU, as the engine exceeds the power potential expected from an STU car.

2. #8206 (Cheyne Daggett) Remove Cars over 3.2L
Thank you for your request. The CRB has no plans to change engine size requirements for STU. The CRB has no plans to remove the section of 9.1.4.A that you referred to.

3. #8260 (Ralph Siebert) Allow 18" Wheel size for Solstice
Thank you for your request. The CRB has no plans to change the current maximum wheel size (17X8) for STU.

IT
None.

Production
None.

AS
None.

SS
SSC
1. #7799 (Mark McCaughey) Change Celica GTS Restrictor size from 52 to 54mm
Thank you for your request. The CRB has made changes for this car and will continue to monitor the effectiveness of the changes before considering any additional changes.

2. #8304 (Charlie James) Add wheel spacer to Hyundai Tiburon
Thank you for your request. Due to the rules season limitations, this cannot be added for this year. "SSC" class cars that will be listed with an alternate wheel type in class 3 or 4 for 2013 are being considered to allow spacers.

B-Spec
1. #8045 (Richard Kulach) proposed classification
Thank you for your input. The CRB will be looking over each class to find inconsistencies. Thank you for catching this.

SM
None.

Touring/Showroom Stock
T
1. #8138 (Cheyne Daggett) Trunk Pins
Thank you for your request. The CRB has no plans to allow trunk pins in Touring or to permit the removal of stock latch systems.

PREVIOUSLY ADDRESSED
None.

NO ACTION REQUIRED
GCR
1. #7846 (Robert Hudson) Comment on item #7627 (use of #1) from April Fastrack
Thank you for your letter. Please see letter #7801.

2. #8226 (Robert Cancellieri) Need to Mandate X for Novice Drivers
Thank you for your letter. This is a Region option, which should be defined in the Supplemental Regulations. Please contact your Region's competition committee.

Formula/Sports Racer
FV
1. #8161 (Thomas Galuardi) Spec Tire for Formula Vee
Thank you for your support and letting us know you are pleased.

ST
STU
1. #8268 (Matt Blehm) Support 2013 rule change for non-US engines.
Thank you for your support. This item was presented and approved by the BoD June 1-2, 2012. You should now submit your VTS.

2. #8363 (Colin Rosenberg) Weight reduction/weight penalties
Thank you for your support of STU. We recommend that you either consider an engine swap or run STL .

3. #8387 (Robert Frost) Homologation - Discussion Reference #8029
Thank you for your input. The engine output exceeds the expected performance potential of STU.

ST
1. #8320 (Cheyne Daggett) Combine Classes
Thank you for your suggestion. The CRB has no plans to combine ST classes.

2. #8338 (Kirk Knestis) Support for Proposed Rule Change - Non-US engines in ST
Thank you for your support!

STL
1. #8201 (Michael Jones) clarify ST classing for the Rx7
Thank you for your letter. This item was corrected in the June 2012 Fastrack Technical Bulletin, letter #8202. The June update of the GCR reflects this change in section 9.1.4.3.I.2.

2. #8233 (Glenn Lawton) correct STL eligibility to allow IT cars w/ allowed rotary engine
Thank you for your request. Please see the response to letter #8201.

STU
1. #8268 (Matt Blehm) Support 2013 rule change for non-US engines.
Thank you for your support. This item was presented and approved by the BoD June 1-2, 2012. You should now submit your VTS.

2. #8363 (Colin Rosenberg) Weight reduction/weight penalties
Thank you for your support of STU. We recommend that you either consider an engine swap or run STL .

3. #8387 (Robert Frost) Homologation - Discussion Reference #8029
Thank you for your input. The engine output exceeds the expected performance potential of STU.

IT
None.

Production
None.

AS
None.

SS
1. #7898 (Mark McCaughey) Add stock throttle body opening to spec notes
Thank you for your request, however, the CRB has no plans to publish the stock throttle body size along with the restrictor size.

SSB
1. #8203 (Stan Czacki) Well Done!
Thank you for the kind words.

T
T1
1. #8238 (Matt Merrill) 2013 proposed rules
Thank you for your input. The class structure specifics, i.e., weight, restrictors, parts, etc. still need to be refined. This will be taking place in the coming months.

2. #8275 (Carl fung) Comment on Proposed new 2013 rules for T1 corvette C5
Thank you for your input. Your comments will be taken into consideration when the class details are refined.

RESUMES

None.

CLUB RACING TECHNICAL BULLETIN

DATE: June 20, 2012
NUMBER: TB 12-07
FROM: Club Racing Board
TO: Competitors, Stewards, and Scrutineers
SUBJECT: Errors and Omissions, Competition Adjustments, Clarifications, and Classifications

All changes are effective 6/29/2012 unless otherwise noted.

GCR
None.

Formula/Sports Racer
S2
1. #8282 (Tony Sleath) Allow Approved Mazda Engine June 1st
EFFECTIVE IMMEDIATELY:
In 9.1.9.B.1, add the following at the end of the first sentence: *" as defined in 9.1.9.B.5 , or the Mazda MZR 2.0 liter as defined in 9.1.9.B.6.*"

In 9.1.9.B.5, change the beginning to:

"B.5. Engine *(Ford Pinto)*
~~The only~~ *A* permitted engine…"

Add a new section to 9.1.9.B.6 as follows, and renumber succeeding sections.

B.6. Engine (Mazda MZR)
An alternate permitted engine is the Mazda MZR 2.0L dual overhead camshaft engine, which must conform to the following specifications and may be modified only as explicitly allowed. If these specifications do not explicitly allow a modification, then it may not be done. The philosophy of the MZR engine in Sports 2000 is to allow limited engine rebuilds but no performance modifications to the engine. Overhaul procedures that in the slightest way would increase performance are not permitted (e.g., porting, polishing, coating). Blueprinting, lightening, and balancing are inconsistent with the philosophy of this formula and are not allowed. Where Mazda part numbers are specified, normal industry part number supersession is expected and the superseding part numbers are automatically included.

a. All surfaces on the head, block, connecting rods, pistons, and crankshaft must remain as manufactured by Mazda and may not be altered in any way. The original casting marks and cast surfaces must remain as-cast and also meet all of the Mazda design values and tolerances stated in the Mazda factory manual or delineated in these specifications. The block may not be decked. The minimum block deck height is 11.930 inches. Only Mazda MZR engine blocks with serial numbers LFE2-10-300E ('05-'08) or LF9G-10-300 ('09) are permitted. The maximum compression ratio is 10.8:1, the required standard bore is from 3.445 inches to 3.448 inches, and the required stroke is 3.272 inches. The maximum bore dimension of 3.448 inches is intended to allow for cylinder wear only. It is not permitted to machine to this dimension. The bore measurement will be taken 1.650 inches below the block deck where the bore is untouched by the piston ring.
b. Pistons, crankshaft, and connecting rods may be replaced only with standard, original Mazda production parts. The connecting rods may not be bored or remanufactured in any way. Standard oversize and undersize main or connecting rod bearings are permitted. Reduction of the width of the standard bearings is not permitted. Replacement main bearings must be standard Mazda or Cosworth KK3481. Replacement connecting rod bearings must be standard Mazda or Cosworth KK3483.
c. Only original Mazda replacement piston rings may be used. The ring end gaps may not be altered and must remain as manufactured by Mazda. All of the rings must be installed, including the complete oil scraper assembly. The piston bore may be honed solely to allow piston ring seating. The first and second compression rings must be installed in the positions designated by Mazda.
d. The cylinder head may not be ported, polished, or machined. The minimum head height is 4.875 inches. A standard three-angle "production" valve job is required, and the only allowed angles are those defined in the Mazda factory manual. The intake valve seat angles must be 35°, 45°, and 70°; the 45° seat must be a minimum 0.048 inches wide. The exhaust valve seat angles must be 30°, 45°, and 65°; the 45° seat must be a minimum of 0.048 inches wide. The camshafts, valves, springs, retainers, and shim/bucket combinations must be original Mazda parts and not modified in any way. The camshafts must remain as ground by Mazda; no polishing is permitted. Valve seats may not be replaced. Only the Mazda L3G2-10-271A ('05-'08) or LF9G-10-090a ('09) cylinder heads are allowed. Only the Mazda L3E3-12-420 intake and L309-12-441A exhaust camshafts are allowed. The original, unmodified Mazda camshaft sprockets and crankshaft timing pulley must be used. Camshaft timing must remain stock and must be set per the procedure outlined in the Mazda factory manual. Modifications to the variable valve timing mechanisms are prohibited.
e. Flywheel: The minimum weight is 5 pounds. Any weight removed from the flywheel must come from the clutch plate

surface. Only the Mazda LFG2-11-500 ('05-'08), Mazda LF9G-11-500 ('09), Quartermaster 505307, or Cosworth 20001019 flywheels may be used.

f. Any dual plate 5.5 inch or single plate 7.25 inch diameter, non-carbon fiber clutch is permitted, provided no modification is made to the flywheel other than changing the clutch's points of attachment to the flywheel. The original, unmodified Mazda clutch assembly may be used.

g. A Life Racing F42R or F88R ECU and engine wiring harness must be used; the current specification map is required. Failure to use the current map will result in an automatic penalty of 1 year suspension from SCCA Club Racing. The map is available on the SCCA web site. Ignition coils must be standard Mazda. Spark plugs are unrestricted.

h. The Jenvey SCCA-S2 intake kit including intake manifold, o-rings, throttle bodies, throttle position sensor, air horns, and fuel rail must be used with no modifications of any kind. Fuel injectors must be Bosch 0 280 155 868. The provided, continuous o-rings must be fitted to each intake runner groove between the intake manifold and cylinder head to ensure that no air bypasses the o-ring seal. Intake air filters are unrestricted.

i. Intake restrictor: 1.205 inch diameter restrictor plate per intake port. The restrictor plates must be obtained from Quicksilver RacEngines or Elite Engines. The restrictor plates must not be modified in any way.

j. The exhaust system manifold tubing inside dimension must be 1.625 inches, and the manifold tubes must be a minimum of 24 inches in length, terminating into a single exhaust pipe through a 4-into-1 collector. The collector angles must be 15 degrees (30 degree included angle), with an exit diameter of 2.250 inches. The tail pipe must be a minimum of 24 inches in length. The tail pipe includes a muffler, if present, as long as the inlet and outlet pipes of the muffler are the same diameter as the tail pipe. 4-into-2-into-1 exhaust collectors and reduced diameter venturi sections are prohibited.

k. Engines will be mounted upright and aligned fore and aft in the chassis.

l. The addition of material by any means to any component is prohibited.

m. Non-standard cam / valve covers are permitted provided they in no way improve the performance of the engine.

n. Three-stage dry sumps having no more than two scavenge stages are permitted. Localized machining of the engine block is permitted to allow fitment of the oil pump. An engine block breather cover may be fitted. The lubrication system is otherwise unrestricted.

o. Oil coolers are unrestricted.

p. A liquid cooling system is required; radiators and water pumps are unrestricted. The cylinder head water outlet housing may be modified or replaced to facilitate the routing of coolant lines.

q. Fuel pumps are unrestricted.

r. Gaskets and seals are unrestricted, except cylinder head gasket, Mazda part L3G2-10-271A must be used.

s. Pump, fan, and generator drive pulleys are unrestricted.

t. Generators are unrestricted.

u. The use of non-standard replacement fasteners (nuts, bolts, screws, studs, and washers) which are not connected with or do not support the intake manifold or any moving parts of the engine are permitted.

In 9.1.9.B.11, modify selected subsections as follows:

In 9.1.9.B.14, modify as follows:

B. ~~13~~*14* Weight

1310 lbs., minimum*, Pinto w/iron cylinder head and standard camshaft.*

1335 lbs., minimum, *Pinto with Fast Forward* aluminum cylinder *head and standard camshaft*.

1335 lbs., minimum, Pinto with iron cylinder head and FC2000 alternate camshaft.

1335 lbs., minimum, Mazda MZR.

FV

1. #7691 (Stephen Saslow) Clarification

In section 9.1.1.C.3.A

9. Caster, camber, and toe in/out settings are unrestricted. Offset link pin suspension bushings and alternate locating spacers are permitted. *Shims/spacers used solely for camber adjustment are open.* Clearancing of the link pin carrier and/or trailing arms to eliminate binding is permitted. No other modifications to the link pin carrier are permitted.

Note to submitter: In the opinion of the FSRAC a link pin is NOT a fastener.

F5

1. #8305 (Chris Huskamp) E&O Carb Boot Number to be incorporated for June Sprints

In section 9.1.1.E.14, under Authorized Changes, sub-section A, make the following changes:

A. Carburetors: The induction system is restricted to two (2) 38mm Mikuni VM 38 round slide carburetors (except AMW). No modifications are permitted to the carburetor bodies. The use of any jets or jet needles is permitted.

Carburetor mounting shall be of individual runners, no balance pipes, no plenums unless fitted as standard as on the 493 *and 593*engine. *38mm intake boots, BPP* ~~*48*~~ *420867860(last 6 digits 867860 are embossed on the boot) or Kimpex 07-100-33, shall be used for the 493 and 593 engines.* Supercharging, turbocharging, and direct fuel injection are prohibited.

Grand Touring

GT3

1. #8158 (Mike Cyphert) Increase specified SIR to 32 mm at 2195 lbs.

EFFECTIVE IMMEDIATELY, In GT3, Nissan Engines, change the KA24E Fuel Induction column as follows: ~~31mm~~ *32mm* SIR
NOTE: In Notes section 32mm chokes @ 2280 to remain in effect until expiration at the end of 2012.

Improved Touring
None.

Production
1. #8474 (SCCA Staff) Add a tolerance to the throttle body column.
Add a +/- .25mm tolerance to the throttle body spec line column.

Super Touring
ST
1. #8209 (Club Racing Board) Lug Nuts
In ST section 9.1.4.P.2.c, remove redundant language (fasteners are free):
~~Lug nuts and/or wheel studs are free as long as at least two (2) threads of the wheel studs are visible and the outside edge of the nuts and studs are inside the wheel rim when properly mounted.~~

2. #8259 (Greg Amy) Brake Lines
Replace 9.1.4.O.1, Brakes:
Brake lines may be relocated and/or replaced. Pressurized brake lines must be replaced with steel lines or Teflon-lined metal-braided hose. Lines/hoses may be relocated and may be given additional protection. Brake fittings, adaptors, and connectors are unrestricted. Brake system circuitry may be revised.

Insert 9.1.4.O.2, move all subsequent lines down:
2. Brake proportioning valves may be used provided that they are of the in line, pressure limiting type.

Insert 9.1.4.O.3, move all subsequent lines down:
3. Hand brake assemblies may be removed.

STL
1. #8557 (Club Racing Board) E&O Add MX-5 Cup Car to List of Eligible STL Cars
Change **9.1.4 B. Eligibility:**
• Spec Miata cars completely conforming to Spec Miata class specifications are eligible for STL. *Spec Tire not required in STL.*
• ~~Spec~~ *SM5 and* MX-5 *Cup* ~~class~~ cars completely conforming to ~~Spec~~ *SM5 or* MX-5 *Cup* class specifications are eligible for STL. *Spec Tire not required in STL.*

American Sedan
None.

Spec Miata
None.

Touring/Showroom Stock
T1
1. #8182 (Brian Bates) Wheel/Tire Sizes
In T1, BMW E92 M3 (08-12), change the spec line as follows:
Max Wheel Size: ~~18 X 10 (F) 18 x 10 (R)~~ *18 x 10 F & R*
Tire Size: ~~295/35 (F) 295/35 (R)~~ *315 F&R Max.*
Note to submitter: Please submit the manufacturer and part numbers for the suspension desired.

T2
1. #8392 (T-SS Committee) Error - Correct T2 Camaro transmission ratios
In T2, Chevrolet Camaro, 1LE, SS (10-13), add the 1LE transmission gear ratios as follows:
2.66, 1.78, 1.30, 1.00, 0.74, 0.50

SSB
1. #7936 (Lee Niffenegger) Add 2010 and 2011 model years
In SSB, Honda Civic Si (06-09), update the model years as follows: (06-~~09~~ *11*)

B-Spec
1. #8412 (Club Racing Board) Allow Fiat 500 Header.
EFFECTIVE IMMEDIATELY, In B-Spec, Fiat 500 (2012), Add to notes as follows: "*Header kit (cat delete) P5154829 allowed.*"

2. #8448 (T-SS Committee) update B Spec rules to latest version
In B-Spec, make the following changes to the spec line:
Kia Rio 5-door (2012): ~~23mm~~ *31mm* Flat Plate Restrictor, Weight: ~~2600~~ *2500*
Ford Fiesta (4-dr) (11-12): Weight: ~~2575~~ *2545*
Split the Mini Cooper into two spec lines as follows:
Copy the existing Mini Cooper spec line and change the years to (07-10) and weight to 2570 lbs.
Change the existing Mini Cooper spec line as follows: ~~(07-12)~~ *(2011+)*

CLUB RACING COURT OF APPEALS

JUDGEMENT OF THE COURT OF APPEALS
Gerald Lustig vs. SOM COA Ref. No. 12-06-SE
May 16, 2012

FACTS IN BRIEF

On April 21, 2012 at the North Carolina Double National at Virginia International Raceway, GT2 #24 driven by Gerald Lustig was involved in contact with car #57, AS driven by Thomas Ellis. Sunday morning Mr. Lustig entered the paddock space of car #57 and a verbal altercation ensued. Mr. Lustig threatened to break the windshield of car #57 with a tire iron. This was reported to Clyde Kiser, Assistant Chief Steward (ACS) for Group 1, who filed a Request for Action (RFA). The Stewards of the Meeting (SOM) Ken Blackburn, Robert Mayes, Mike Havlick and Walt Michael, Chairman, interviewed witnesses and determined that Mr. Lustig was in violation of 2012 GCR 2.1.7. (Acting in an unsportsmanlike manner) and placed Mr. Lustig on a 4 race weekend probation which assigned three penalty points on Mr. Lustig's license.

Mr. Lustig is appealing the penalty.

DATES OF THE COURT

The SCCA Court of Appeals (COA) Rick Mitchell, Jeffrey Niess, and Michael West, Chairman, met on May 9 and 6, 2012 to review, hear and render a decision on the appeal.

DOCUMENTS AND OTHER EVIDENCE RECEIVED AND REVIEWED

1. Appeal letter from Gerald Lustig dated May 2, 2012.
2. Official Observers Report and related documents, received May 8, 2012.
3. E-mail from Sara Snider, Chief Steward (CS), received May 10, 2012.
4. E-mail from Bob Horansky (Executive Steward SEDIV), received May 10, 2012.

FINDINGS

The basis for Mr. Lustig's appeal is that the Chief Steward (CS), Sara Snider, didn't file the RFA per 2012 GCR 8.1.2. (*The Chief Steward may submit to the SOM a Request for Action (RFA) describing a suspected breach of the GCR or the Supplemental Regulations, asking the SOM to investigate and determine whether there was a breach, and what, if any, penalties to impose.)* Mr. Lustig asserts that, because the RFA was filed by the ACS, the SOM acted improperly and without authority.

The Court of Appeals (COA) finds that 2012 GCR 5.12.2. (Chief Steward) sets forth the duties and authorities of the Chief Steward and allows the Chief Steward to delegate any of those duties to the Assistant Chief Stewards (ACS). 2012 GCR 5.12.2.B.6. empowers the Chief Steward to convey a Request for Action (RFA) to the SOM on entrant or driver misbehavior. The RFA was filed with the Chief Steward's full knowledge and approval. The Chief Steward delegated her authority set forth in 2012 GCR 5.12.2.B.6. to ACS Clyde Kiser in accordance with 2012 GCR 5.12.2. Additionally, the published RFA form allows for an ACS to sign the form and has a check box for indicating it was signed by the ACS. This was properly noted on the RFA in question. The COA finds that the RFA was filed in accordance with the 2012 GCR. The SOM acted on the RFA properly and within their authority.

DECISION

The Court of Appeals upholds the decision of the SOM in its entirety. Mr. Lustig's appeal is deemed not well founded and his appeal fee will be retained.

TIME TRIALS ADMINISTRATIVE COUNCIL

TTAC Minutes | May 9, 2012

Time Trials Administration Council met by conference call on May 9, 2012.

Meeting was called to order at 7:34 CDT by Tony Machi, Chairman.

Present: All members except Matt Rowe and Joe Oliveira, also present were BOD Liaisons, Deanna Flanagan of the National Staff and Bob Horansky.

There was continued concern by the TTAC about the timely filing of Observer reports. All the administrators were asked to pay attention to the publication of the reports on the SCCA forums.

Discussion about the placement of Time Trials on the SCCA website home page. Deanna stated she was informed with the limited space there wasn't room for another pull down tap in the current format. The National Office feels that the focus should be on growing the program with the Regions first. The Council reviewed our discussion with the BOD at the convention. Jerry Wannarka, as BOD Liaison DuJuor, said he would look into the issue.

Jerry Wannarka, on behalf the BOD and the membership, thanked the TTAC for their time and efforts to grow the program.

REQUEST FOR RESUMES: The Time Trials Administration Council is seeking resumes from persons who would be interested in serving on the Time Trials Safety Committee. The goal is to recruit members from Divisions not currently represented but all are welcome. Those interested should submit their resume to www.sccatimetrials.com.

SOLO EVENTS BOARD

SOLO EVENTS BOARD | May 23, 2012

The Solo Events Board met by conference call May 23rd. Attending were SEB members Dave Feighner, Bryan Nemy, Steve Hudson, Mike Simanyi, Erik Strelnieks, Richard Holden, and Dave Hardy; John Walsh and Brian McCarthy of the BOD; Doug Gill, Ryan Miles, Brian Harmer and Howard Duncan of the National Staff. These minutes are presented in topical order rather than the order discussed.

Unless noted otherwise the effective date for all rule, class, and listing change proposals herein is 1/1/*2013*

Comments regarding items published herein should be directed via the website www.sebscca.com.

TIRE RACK SOLO NATIONAL CHAMPIONSHIPS

- The SEB has reviewed and approved the draft Supplemental Regulations for the event.

AWARDS

- Nominations are requested from the membership for the Solo Cup and Driver of Eminence awards. Descriptions of these awards and lists of past winners may be found in Appendix K of the Solo rule book.

STOCK

- The following class change proposals have been recommended by the SAC and are submitted here for member review and comment:
  - Move from BS to *FS*: Chrysler Crossfire SRT-6 (2005-'06) (#8177)
  - Move from CS to *BS*: Pontiac Solstice Z0K (2006-'09) (#8254)

    Comment: See Tech Bulletin #1 under Stock for more information.
  - Move from CS to *BS*: Mazda MX5 MS-R (2007) (#8254)

    Comment: See Tech Bulletin #1 under Stock for more information.
  - Move from AS to *FS*: BMW M3 (E90/E92/E93 Chassis) (2008-2012) (#8521)
  - Move from BS to *FS*: BMW M3 (E46 Chassis) (2001-2006) (#8521)
  - Move from AS to *FS*: Mercedes C63 AMG (non-Black edition) (2008-2012) (#8521)
  - Move from AS to *FS*: Lexus IS-F (2008-2012) (#8521)
- The SAC and SEB have reviewed the following items, and thank these members for their input:
  - #8148, 8150, 8235: Porsche strut top allowances, 13.8.B
  - #7864, 8237: Road Tire comments. The SAC and SEB will continue to monitor the Road Tire classes, and a change to the minimum required treadwear rating for RT classes remains under consideration.

STREET TOURING

- The previously-published proposal to revise the ST category minimum treadwear rating has been withdrawn. The SEB believes at this time that a better way to address specific parity issues is to make use of the ST exclusion list. (#7881, 7884, 7887, 7889, 7891, 7894, 7905, 7908, 7909, 7919, 7921, 7922, 7923, 7929, 7933, 7946, 7948, 7950, 7951, 7952, 7954, 7955, 7960, 7962, 7963, 7964, 7965, 7966, 7968, 7970, 7973, 7975, 7967, 7978, 7980, 7982, 7983, 7988, 7992, 7993, 7999, 8000, 8001, 8002, 8005, 8006, 8008, 8009, 8012, 8015, 8016, 8017, 8018, 8019, 8021, 8025, 8027, 8031, 8038, 8041, 8053, 8058, 8062, 8063, 8064, 8066, 8070, 8071, 8073, 8074, 8081, 8082, 8085, 8086, 8089, 8092, 8094, 8099, 8103, 8104, 8105, 8108, 8110, 8112, 8113, 8120, 8128, 8141, 8145, 8151, 8156, 8183, 8218, 8219, 8221, 8222, 8290, 8291, 8292, 8318, 8322.)
- The SEB is considering, per 14.3.D, the following addition to the ST tire exclusion list, effective 1/1/2013:

  Toyo Proxes R1R 195/50-15 size only

  Comment: This size has proven to be faster than the rest of the R1R lineup, and in classes in which some cars can use this tire where other cars cannot, it is discouraging participation by those unable to use it. It is the opinion of the SEB that those members who are currently running this tire have many other options which will maintain the competitiveness of their car, while also encouraging more participation by those members who cannot use this size. Much of the feedback to the now withdrawn proposal to raise the treadwear limit contained suggestions that the SEB better utilize the exclusion list, versus

making a wholesale change to the treadwear limit. This proposal is in response to that feedback.

STREET PREPARED

- The SPAC and SEB have reviewed the following items, and thank these members for their input:
  - #7409, CSP intake: This was covered by SP Tech Bulletin 7, responding to item #7399 in the June Fastrack.

STREET MODIFIED

- The following rule change proposal has been recommended by the SMAC and is published here for member review and comment (#7510):
  - Replace 16.1.N with the following..

    N. Removable OE hardtops, T-Tops, targa tops, sunroofs, moon roofs, and similar roof-mounted panels may be removed/replaced with alternate panels provided that the area of interface is limited to the original perimeter of the t-top, sunroof, etc. or utilizes the OE panel mount points, and that the contour of any replacement panel surface does not vary from the contour of the part being replaced by more than 1 inch in any direction. The material used to construct the alternate panel and the method used to attach it to the interface is unrestricted. Any actuation mechanism and the associated wiring, if any, may be removed. *Vehicles utilizing alternate (non-OE) hardtops will be considered as open cars in regard to Section 3.3.1.*

  - The following revised version of a previously-published rule change proposal has been provided by the SMAC (#8065):
  - Replace 16.1.I with the following:

    I. Front hoods (engine covers), engine covers, trunk lids and hatches not containing glass, front fenders, rear fenders not part of chassis structure (unibody), front & rear fascias, and side skirts may be modified or replaced, and may be attached with removable fasteners. *Associated hardware including latches, hinges, and hood liners may be modified, removed or replaced. The windshield washer system may be removed in whole or in part.*

  - The SMAC and SEB have reviewed the following items, and thank this member for the input:
    - #8067; SSM and SM.

PREPARED

- The following rule change proposals have been recommended by the PAC and are presented here for member review and comment:
  - Replace 17.8.C.2 with the following (#7151):

    "*The steering column is unrestricted. A collapsible type steering column having a layout and design and/or a column structure with impact and energy absorbing characteristics is strongly recommended.*"

  - Add the following subsection to Appendix A, Section 9 for X Prepared (#7239):

    "c. Regardless of the Minimum Weight Calculations above, no car with a turbocharged or supercharged engine shall weigh less than the following Minimum Weights:

    RWD: 1,700 lbs

    FWD: 1,575 lbs

    AWD: 1,825 lbs"

    Also add the following subsection to Appendix A, Section 1 for X Prepared:

    "h. Minimum track width of 55 inches".

    Comment: The intent of this proposal is to ensure the continued popularity of XP by limiting participation to vehicles above specified weight and width minimums. This proposal replaces the minimum weight proposal for XP originally published in the February 2012 Fastrack.

  - Add the following to Appendix A for C-Prepared (#4597, 8315):

    "Traction control/stability control may not be added to a car which was not equipped with an OEM traction/stability control system. OEM systems may be retained, but may not be replaced or modified in any way other than deletion."

    Comment: The intent of this proposal is to explicitly prohibit non-OE traction/stability control systems in C-Prepared.

- The following class change proposals have been recommended by the PAC and are submitted here for member review and comment (#7221, 8316):
  - Move from Supplemental Class BP to FP

Chevrolet

Corvette (1953-62)

Corvette (1963-82)

May use any 2v-per-cyl Chevrolet V-8 engine. May use transverse leaf front spring.

Corvette (1984-1996)

Corvette (1997-2004)

Corvette (2005-2012) (Naturally Aspirated)

Dodge

Viper (ALL)

1-3/8 in. restrictor plate required

Comment: The PAC believes the vehicles listed above appear to be a good fit in the currently diverse FP class. Members with former BP eligible vehicles interested in returning to active National Status are **strongly encouraged** to provide the PAC feedback to the above proposal and participate in inter-regional, National Tour, and the SOLO Nationals in 2012 in order to gauge further interest and participation.

- The PAC and SEB have reviewed the following items, and thank this member for the input:
  - #7221; BP proposal.
  - #7300, 7311, 7400, 7847; XP wing comments. See the proposed changes referencing item #7239.
  - #7849; roll bar/cage comments.
  - #8311; XP weights. See the proposed changes referencing item #7239.

MODIFIED

- The following rule change proposal has been recommended by the MAC and is published here for member review and comment:
  - Add new section 18.1.D.6 as follows:

    "*6. Turbocharging and supercharging are permitted for all engines, subject to the displacement factor of 18.0.C. In class D Modified, such induction systems must have a restrictor on the inlet side of the turbocharger/supercharger. All inducted air must pass through this restrictor, which must be constructed of metallic material. The minimum orifice (choke) diameter of the restrictor shall be no greater than 33mm. The restrictor passage may be shaped fore and aft of the choke region. The restrictor choke region must be made of one piece, without moving parts.*" (#6242, 7505)

- The following package of class and rule change proposals, affecting various sections in Appendix A, has been recommended by the MAC and is published here for member review and comment. This set of changes moves the Solo Vee cars from F Modified into C Modified, and makes preparation allowance upgrades which have been requested by members to help improve the competitiveness of the SV cars:
  - Move subsection B in its entirety from under Modified Class F into Modified Class C.
  - Move subsections C, D, and E from under Modified Class F into Modified Class C.
  - Remove the "Solo Vee" under subsection F under Modified Class F, and create a corresponding item under the Solo Vee rules as moved into Modified Class C.
  - Under Solo Vee (as moved) Change C.2.f to read: "f) One *or two* two-barrel carburetor*(s)* of any origin may be used. One-barrel carburetor*(s) will* only *be* allowed as permitted by the applicable GCR."
  - Under Solo Vee (as moved) change E.1 and E.2 to read as follows:

    "1. Increase compression up to and including 10:1 ratio with OE bore and stroke. Fuel injection is prohibited. Valve size may be increased to a maximum of *44 mm* intake and ***37.5 mm*** exhaust. Port location may not be changed from OE stock. Machining of any type in the combustion chamber such as, but not limited to, valve unshrouding is prohibited. Valve guide center shall remain OE stock. OE stock heads shall be used. Any single carburetor (regardless of the number of venturis) is permitted. Multiple carburetion is restricted to a maximum of two 44mm carburetors with 28 mm venturis. If a balance tube is used between manifold runners, it shall be restricted to one 1/2-inch ID pipe. Any intake manifold not having a plenum chamber is permitted. Minimum weight is 1000 lbs.

    2. Increase bore up to and including 94 mm maximum per cylinder, total displacement of 1915 cc. Machining to allow the installation of the cylinders is permitted. No other combustion chamber machining such as, but not limited to, unshrouding of the valves, is permitted. Valve guide centers must remain OE stock. Increased displacement

engines up to 1915 cc are restricted to maximum valve sizes *44 mm* intake and *37.5 mm* exhaust. Port location may not be changed from OE stock. OE stock heads shall be used, however, alternate VW heads may be substituted. A maximum compression ratio of 9:1 is permitted. Any single *or dual two-barrel* carburetor may be used. Minimum weight: 1000 lbs." (#6804, 6805, 6806, 6807, 7325, 7454)

- The MAC and SEB have reviewed the following items, and thank these members for their input:
  - #7784 and 7810, roll cage comments

NOT RECOMMENDED

Stock

- #7844, Scion IQ classification: This model does not meet current requirements with respect to CG height, SSF, or track vs. height.
- #8119, Fiat 500 classification: The SAC has not received information which completely addresses concerns about this model.
- #8241, turbo 996 classification: The SAC has recently decided not to add either the Nissan GTR or the Audi R8 to SS, and similarly does not choose to add this car at this time due to concerns about the competitive balance within the class.

Prepared

- #6248, RWD in EP: The PAC is currently discussing a wide range of potential proposals to ensure the long-term competitive balance of EP.
- #7313, EP wheel widths: The PAC does not view this change as being necessary at this time.

TECH BULLETINS

Stock

1. Per the SAC, the following new listings are effective immediately upon publication:

   Scion FR-S CS (#8242)
   Subaru BRZ CS (#8242)
   Comment: The SAC spent a considerable amount of time deciding on the proper class for the FR-S and BRZ, and came up with the conclusion that C Stock would be the best fit if the MSR and ZOK were moved to B Stock. They also felt that this would allow the MX-5 without the MS-R package a chance to be more competitive. The SEB agreed.

2. Per the SAC, the following listing updates are effective immediately upon publication:

   Ford Mustang GT (2005-*2013*) FS (#8255)
   Ford Mustang (V6)(2011-*2013*) DS (#8255)
   Ford Mustang Shelby GT500 (2007-*2013*) AS (#8255)
   Ford Mustang Boss 302 (Non Laguna Seca)(2012-*2013*) AS (#8255)

Street Prepared

3. Per recommendation of the SPAC, the following listing clarifications are effective immediately upon publication (#7825):

   DSP
   BMW
   325 & 318 (16V) (D30 chassis)
   318 (E36 chassis)
   FSP
   BMW
   318 (8V) (E30 chassis)
   Note: The E30 M3 remains in CSP.

Modified

4. The first sentence of item F.1 under Modified Class B in Appendix A is clarified to read as follows (#7841):

   Wings and other aerodynamic devices front and rear may match but shall not exceed sports racer maximum height *(45.25 inches, per GCR 9.1.9)*

5. The provisions of 18.1.F.5 pertaining to belly pans and diffusers are clarified as follows (#7504):

   The belly pan is not permitted to extend rearward beyond the original bodywork.
   The belly pan is required to be continuous with the leading edge of the diffuser; the belly pan/diffuser must be sealed to the underside of the body to prevent air from flowing both above and below.
   The diffuser may protrude rearward beyond the top view outline of the car for its full length, which is limited to 25 inches.
   The belly pan shall be flat within one inch total deviation, independent of chassis rake.
   The belly pan is permitted to cover the entire underside of the car, but is not required to do so.

6. In order to address various structural inconsistencies and provide easier referencing, the MAC has provided the following clarified form of the first portion of Section 18. (#7841):

"18. MODIFIED CATEGORY

Sports cars and sedans altered in excess of Prepared Category, sports racing and two-seat specials, Formula cars, single-seat specials, dune buggies and kit cars. Active Automatic Braking Systems (ABS) and Traction Control Systems (TCS) are prohibited in Modified Classes B, C, and F (BM, CM, and FM). Traction Control Systems are prohibited in Modified Class A (AM). Active Automatic Braking Systems (ABS) and Traction Control Systems are prohibited in Modified Classes D and E (DM and EM), except for the original system installed on the car, which may not be modified. Engine RPM limiting devices (rev limiters) are allowed in all Modified classes. Data acquisition systems are allowed in all Modified classes unless specifically prohibited by the applicable GCR section(s).

Modified Category cars are divided into classes based on potential Solo® performance. They need not be licensed for or capable of street use. The Solo® Rules shall take preference over the Club Racing GCR (General Competition Rules) concerning safety requirements for vehicles in this Category. Aerodynamic devices must be securely mounted on the entirely sprung part of the car and must not be moveable when the car is in motion. The use of any moving device (for example a fan, propeller, or turbine) or hinged wing to create downforce is prohibited. Movable side skirts are not permitted except where noted herein or in Appendix A, Modified Category.

A. Sound Control Modifications

If a formula car or sports racer is restricted by a GCR-stated exhaust length or vehicle length and therefore prohibited from installing the necessary exhaust devices to quiet the car to meet local dB limits, the following shall apply:

The vehicle exhaust system length may be extended to allow for the installation of noise suppression devices. This allowance is provided solely to reduce the exhaust noise emanating from these cars by allowing the installation of (a) noise limiting device(s) and in so doing keep the total exhaust length to a minimum for safety reasons. The installation and the noise limiting device(s) shall serve no other purpose than that stated and this allowance only applies to an extension of the exhaust system, not the vehicle bodywork or frame.

B. Engine Classifications

1. Four-stroke cycle and two-stroke cycle, naturally aspirated, internal combustion engines will be classified on the basis of actual piston displacement.

2. Rotary Engines (Wankel): These units will be classified on the basis of a piston displacement equivalent to twice the volume determined by the difference between the maximum and minimum capacity of the working chamber, times the number of rotors.

3. Turbocharged or supercharged versions of the above engines will be classified on a basis of 1.4 times the computed displacement.

C. Aerodynamics

The area of a wing shall be computed by multiplying the width and depth of the wing assembly (top view) without regard to the curvature and/or inclination of the wing or number of elements. Any airfoil shadowed by another airfoil with more than six inches between them will have its own projected area added to the wing area calculation. Any diffuser-type aerodynamic device under the car which is used in downforce generation is not included in the wing area calculation.

This specification supersedes Section 12.9 for these classes.

D. Tires

Any tire (including recaps) meeting the applicable portions of Section 3.3 is allowed.

E. Safety *Requirements*

The following shall be required in all Modified Category vehicles:

1. Scattershields/Chain Guard - The installation of scattershields or explosion-proof bell housings shall be required on all cars where the failure of the clutch, flywheel, or torque converter could create a hazard to the driver or passengers. Chain drive cars shall be fitted with a protective case/shield to retain the chain in case of failure.

   The following material requirements apply to scattershields/explosion-proof bell housings:

   0.125 inch SAE 4130 alloy steel

   0.250 inch mild steel plate

   0.250 inch aluminum alloy

   NHRA or SFI approved flexible shields

2. Master Switch - All cars shall be equipped with a master switch easily accessible from outside the car. Spec Racer Ford vehicles shall be wired per RFSRII. The master switch shall be installed directly in either battery cable and shall cut all electrical circuits but not an on-board fire system, if so equipped. It shall be clearly marked by the international marking of a spark in a blue triangle and mounted in a standard location. OFF position shall be clearly indicated at the master switch location. The standard locations shall be as follows:

   a. FORMULA AND SPORTS RACING CARS — In proximity to the right-hand member of the roll bar, but in a location so that it cannot be operated accidentally. It can be mounted on a bracket welded to the inside of the upright member or mounted so that the operating lever or knob is outside of the body panel immediately inboard of the upright member.

   b. CLOSED SPORTS RACING CARS, PRODUCTION CARS, AND GT CARS - In front of the windshield on either the cowl or on top of the fender, but close enough to the windshield to be accessible if the car is overturned. Alternatively, it may be mounted below the center of the rear window or on a bracket welded, clamped or bolted to the roll cage or dash, easily accessible through the open window. (Drilling of holes in roll cage to attach the bracket is prohibited.)

   c. OPEN PRODUCTION and GT Cars - May exercise a choice among the above locations.

3. Driveshaft Hoop - RWD DM and EM vehicles shall have a driveshaft hoop capable of preventing the shaft from entering the driver's compartment or damaging any fluid or electrical lines in the event of joint or shaft breakage. All cars in competition using open driveshafts must have a retainer loop with 360° of enclosure, 1/4" minimum thickness and 2" wide, or 7/8" x 0.065" welded steel tubing, securely mounted and located so as to support and contain the driveshaft in event of U-joint failure. Vehicles that have a closed "tunnel" or other such structure which the driveshaft passes through such as the vehicle's frame, may be considered for an exemption from the SEB if that structure meets the criteria stated above. NOTE: DM and EM vehicles are exempt from the scattershield, driveshaft hoop, and Master Switch requirements if they are using street DOT-approved tires.

4. The roll bar structure must meet the requirements of either Appendix C or the Club Racing GCR required by class rules. Roll cages are strongly recommended.

   "Specials" are required to have the roll bar extend at least two (2) inches above the driver's helmet in the normal seated position and a head restraint keeping the driver's head from going under or behind the roll bar. It is strongly recommended that all cars adhere to this specification.

5. Firewalls and floors shall prevent the passage of flame and debris to the driver's compartment. For cars having fluid lines in a non-stock routing over the belly pan, the belly pan shall have drain holes to prevent the accumulation of fluids.

6. Ballast may be added to obtain minimum weight requirements. However, it must be attached and secured in a safe manner.

F. GCR Exceptions

Club Racing GCR specific items and/or equipment not required in *the* Modified Category are as follows:

1. Fuel cells.
2. Windscreens, side mirrors and tail/stop lights.
3. Headlight covers, lenses, and bulbs.
4. Log books.
5. Fire retardant fire driver's suits.
6. Homologation.
7. Fuel test ports.
8. Production based dune buggies need not meet door requirements.
9. Running lights.
10. Deformable structures as defined by the GCR Formula Atlantic rules.
11. On board fire systems.
12. Reverse gear in BM and FM vehicles.
13. A front impact attenuation device (GCR 9.4.5.G) is not required in Solo® Modified Category vehicles.
14. Driver restraint system aging requirements (GCR 9.3.18.G) do not apply.

The 180° vision rule is recommended.

NOTE: If any conflict exists between the Club Racing GCR and the Solo® Rules, the Solo® Rules shall take precedence.

See Sections 3.8 and 8.3 for documentation requirements.

Refer to Appendix A for additional class-specific vehicle preparation rules.

Refer to Appendix F for past clarifications of these rules."

RALLYCROSS BOARD

RALLYCROSS BOARD MINUTES | June 6, 2012

The RallyCross Board (RXB) met via conference call June 6. Attending were Ken Cashion, Chairman, Brent Blakely, Karl Sealander, Warren Elliott, Stephen Hyatt and Ron Foley. Also in attendance were Stephen Harris, BoD liaison, and Brian Harmer from the National office.

The Secretary acknowledges that these minutes may not be in chronological order.

Committee Reports

1. RallyCross Safety Committee (Bob Ricker): None.

2. RallyCross Rules Committee (Warren Elliott): Tuner class rules proposal is not yet completed, but should be done by 6/15/12. Ken Cashion requested a rules submission deadline reminder in some form be released to the membership. Brian Harmer will post it as a news item at website and at Facebook page. Work on a review and better highlighting of the mandatory sections of the RallyCross Rules is continuing. Warren Elliott also reported that Rally America is interested in discussing running RallyCrosses in conjunction with their events. Cost to the RallyCross program may be an issue. More information to come.

3. National Championship Committee (Brent Blakely): Registration for the National Championship is now open. National Championship key positions assignments are in process and should be set within 60 days. The general consensus is that non-competitors should fill the higher positions. The National Supplemental Regulations were completed in time for the first two National Challenges. As a recap, those events were very successful. A question did come up about taking mechanicals from the start line especially when course conditions favor taking a later start time. Doing so seems legitimate within the rules for now. Jason Woodruff, Southern Pacific Division RallyCross Steward, did a good job adapting to the new Supplemental Regulations. The start position draw was done within classes with a magnet placed on each car indicating its starting position. Warren Elliott updated the RXB on the Tulsa course status and changes, where there will be consideration to assign local members to course design as much as possible.

4. Marketing Committee (Ron Foley): Ron Foley has received submissions and has commitments for more videos for the website that meet copyright requirements. Additional videos are being sought. The old Facebook page users have been successfully migrated to the new official page. Ron Foley outlined several areas in *SportsCar* that are available for possible RallyCross content. Plans for National Championship articles include “Who’s Going to Win” and an open invitation from Chairman Cashion to the National Championship. A good option for Regions and Divisions is to post event dates and results at the forums and to provide the same info, along with event write-ups, to the National office for publishing in *SportsCar*, on the website, and at the Facebook page. The Marketing Committee is working on a site acquisition package similar to Solo’s. To improve the value of the package, experience with obtaining various types of venues is being sought from among the membership.

5. Divisional Steward Liaison (Stephen Hyatt): The last Divisional Stewards’ meeting was short with four stewards attending. The steward from the Southwest Division is moving on and is currently searching for his replacement. The stewards are pleading for the completion of the Safety Steward Training presentation. The deputy steward program is now underway. Demographic questions for sponsorship at the Divisional level should be directed to the National office staff. Incentives were discussed to encourage Divisional Stewards to attend the Championship event. Development of a volunteer incentive program continues.

6. Forum Activity: There has not been much forum discussion in the past month.

Old Business

1. Committee composition/Recruitment (all Committee chairmen): Committee composition should ideally consist of a minimum of 3 to 5 members per committee with a good distribution of talent and willingness. Transitions of committee members should be done as smoothly as possible.

2. New Divisional Steward Orientation: Letters were sent to the Divisional Stewards requesting that they choose a deputy who might be trained and be better prepared to replace the current steward when the time arrives. Follow-up will continue.

3. Growth discussion: Growth bullet points have been successfully absorbed into the respective committees on an ongoing basis. An evaluation of progress will occur towards the end of the year.

New Business

1. Take Detroit off suspension: The RXB agreed that the Detroit Region does not need continued sanction application review, although attention will continue to be given to the Region's events. Reinstatement of the revoked Safety Steward licenses must be handled through the regular Safety Steward Training process.

2. Class champs list: The RXB received a letter from a member requesting that all the past National Champions be listed in the RallyCross Rules. The RXB agrees this is a good idea. The information will be gathered, formatted, and then reviewed by the RXB for inclusion in the next edition of the RallyCross Rules.

3. Tulsa meeting: The RXB is planning a face-to-face meeting with the Divisional Stewards and other key personnel at the National Championship.

4. Indianapolis Sanction: The RXB discussed at length an intra-Division scheduling conflict in the Great Lakes Division. Ken Cashion and Stephen Harris will contact the parties involved in an attempt to mediate the situation.

5. National Challenge schedule status: At the time of the meeting, seven Divisions have scheduled events, two of which have been run. One Division is still in the scheduling process and one other Division probably will not have an event this year.

6. RXB Chairman successor: Ken Cashion reminded the RXB that the Chairmanship is a two-year commitment and that his term will conclude at the end of the year. Any members of the RXB who are interested in the position should submit a résumé.

Next meeting: July 5, 2012

Submitted by Karl Sealander, RXB Secretary

ROAD RALLY BOARD

ROAD RALLY BOARD MINUTES | May 14, 2012

The RoadRally Board met via conference call on May 14, 2012. In attendance: Jim Wakemen, Jeanne English, Rich Bireta, Clarence Westberg, Sasha Lanz, Chuck Hanson, Eva Ames; Deena Rowland and Howard Duncan from National Office; Steve Harris, BOD Liaison; not in attendance: Bob Lybarger, BOD Liaison.

The meeting was called to order at 6:05 pm CST by Chairman Jim Wakemen.

1. April Meeting Minutes were approved.

2. 2012 Rally Liaison updates:

June 2, NCR Steel Haul / Jeanne English
June 23-24, NTCGR National Road, International Road / Jeanne English
July 28-29, NTR/NTR Graham Cracker, Tombstone Epitaph / Jeanne English
August 25-26, 2 Day NTR Western Virginia National Tour / Rich Bireta
September 15-16, NTR/NCR Oktoberally, Badger Trails / Clarence Westberg
October 6-7, NTR/NCGTA Catoctin Monte, Lobster Traps / Jim Wakemen
Oct 19, 20, 21 - USRRC Detroit / Chuck Hanson

Steel Haul and Indy rallies – things are progressing well; AZ Border, 2 tour rallies, sanctions yet?; Sept – Mike Thompson is revising his rally after talking with Clarence, and is adding a regional tour w/OK; Oct WDC rallies, nothing to report; USRRC – progressing, have headquarters and order of events (course, tour, GTA)

3. Concerns tracker – Jim sent web requirements to Howard, looks like it can be on the SCCA website, Jim will coordinate with John Steflik to get it done this week.

4. CERs – National Rally committee will look at this.

5. Howard – what about an Organizer Survey, to be sent to Rallymasters after their audit received, to see what was successful (or not), similar to racers observer's report by chairman; who to send it to? We already have Observer's Reports done by competitors. National Rally committee will look in to this.

6. Regional Rally committee – to be made up of non-RRB members with an RRB liaison; we need to recruit the first group of members; they will report to the RRB; focus on how to increase numbers of contestants; act as clearing house for rules, processes and procedures, possible administrative barriers to attendance, who's doing things that others should know about; alternate rally formats, e.g. GTAs and social rallies. Rich Bireta put a motion in our DropBox about this. How will we get members for this committee? Put a notice on the SCCA Forum asking for volunteers, ask specific people, ask divisional stewards for suggestions. Sasha will reword the DropBox proposal items to be more positive instead of negative. Eva will post this on the SCCA Forum, with a July 1 deadline for applicants. Rich will be the liaison for this committee.
GTA committee – similar to above, but we prefer not much overlap of committee members. Same posting, and deadline of July 1 for applicants. There is a GTA rulebook. GTA committee will be a subcommittee of regional committee. Sasha will be GTA liaison.

Motion to establish these committees, seconded, approved.

7. Road Rally Program Growth, document put together by Rich Bireta – after the Regional Rally committee is set up, let them see this document. It needs some fine tuning - we will discuss more at our June meeting. Good place to start.

8. New business – list of committees, who is on them, what they do, ask for volunteers as needed.

9. Jim wrote (on very short notice) the RRB report to the BOD for their June meeting; it is in the DropBox.

Adjourned 7:40 pm

Respectfully submitted,

Jeanne English, RRB secretary

QUICK LINKS

The following items have been removed from regular inclusion in FasTrack News and can be found on SCCA's Web site at the following links:

CLUB RACING

Runoffs Event page: http://www.scca.com/runoffs
Accredited Driver Licensing Schools: http://www.scca.com/clubracing/content.cfm?cid=50864
Forms: http://www.scca.com/downloads/#club
Technical Forms: http://www.scca.com/clubracing/content.cfm?cid=44472
General Competition Rules (GCR): http://www.scca.com/clubracing/content.cfm?cid=44472

SOLO

40th Tire Rack SCCA Solo National Championships: http://www.scca.com/solonationals
Forms: http://www.scca.com/downloads/#solo
Rulebook: http://www.scca.com/downloads/#solo

RALLY

Forms: http://www.scca.com/downloads/
Rulebooks: http://www.scca.com/downloads/

SCCA NATIONAL CONVENTION

Event page: http://www.scca.com/events/index.cfm?eid=4495

EVENT CALENDAR: http://www.scca.com/events/

Fastrack news
official SCCA member notification
EFFECTIVE FIRST DAY OF THE MONTH UNLESS OTHERWISE NOTED
August 2012

CONTENTS

BOARD OF DIRECTORS	**None**
CLUB RACING	**1**
CRB Minutes	1
Technical Bulletin	7
Court of Appeals	11
Time Trials Admin. Council	13
SOLO	**15**
SEB Minutes	15
RALLY	**20**
RallyCross	20
RoadRally	22
LINKS	**23**

CLUB RACING BOARD

SCCA Club Racing Board Minutes | July 3, 2012

The Club Racing Board met by teleconference on July 3, 2012. Participating were Jim Wheeler, Chairman; Tony Ave, Fred Clark, Jim Drago, Peter Keane, Mirl Swan, and Pam Richardson, secretary. Also participating were: Todd Butler and Richard Patullo, BoD liaisons; Terry Ozment, Vice President of Club Racing; John Bauer, Technical Manager, Club Racing; and Ryan Miles, Technical Coordinator, Club Racing, Butch Kummer, Director of Club Racing, and Bob Dowie. The following decisions were made:

SUGGESTED RULES FOR 2013

The following subjects will be referred to the Board of Directors for approval. Address all comments, both for and against, to the Club Racing Board. It is the BoD's policy to withhold voting on a rules change until there has been input from the membership on the presented rules. Member input is suggested and encouraged. Please send your comments via the form at www.clubracingboard.com or www.crbscca.com.

GCR

None.

Formula/Sports Racing

None.

Grand Touring

GT1

1. #7828 (Charles Wicht) Add 2" to the ACP Corvette front splitter.

Thank you for your request. In 9.1.2.E.1.c, add:** The front undertray and rear fascia and diffuser included in the ACP kit must be replaced with bodywork compliant with the GT1 rules.

****ACP C-6 Corvette bodywork only may add 2.0" to splitter length.*

Lumina (1990-) 106.0"
Monte Carlo (95-00) 103.0"/106.0"
Monte Carlo (01-02) 103.0"/110.0"
Monza 97.0"

2. #8176 (Cliff Ebben) Front Splitter

Thank you for your request. In 9.1.2.E.1.c, add:

MUSTANG (1999-2004) 100.5"
MUSTANG (bodywork) (05-10) 106.0/110.0"
*** ACP (2010) MUSTANG bodywork only may add 2.0" to the front splitter length.**

Improved Touring

None.

Production

HP

1. #8531 (Prod Committee) Comp. Adj. 1.8 L 914 (TB part is Letter #8774)

Thank you for your request. Increase valve lift to .450 for the 1.8 L Porsche 914.

Super Touring

None.

American Sedan

1. #8319 (John Blanchard) 1993-1997 Alternate Camshaft Kit

Add to Proposed Rule Specification lines located at:
http://scca.cdn.racersites.com/prod/assets/Proposed2013ASSpecLines.pdf in the Notes section for Chevrolet/Pontiac Camaro and Firebird (93-97) Restricted Preparation: GM Performance Parts camshaft Kit P/N-12480002 is permitted.

Spec Miata
None.

Touring/Showroom Stock
None.

WHAT DO YOU THINK?
Grand Touring
GT
1. #8749 (GT Committee) GTAC-GTLite rule change proposal

Proposed changes effective 1/1/2013

1. In an effort to improve the straight line speed performance of the GTL Mini and hopefully increase their participation in GTL we believe some non-traditional changes are necessary. Specifically:
    a. allow all Mini's running unrestricted engines less than or equal to 1399ccs to run full flat bottom floors
    b. allow modification or removal of rear valance panel to raise it and rain gutter modification to reduce drag
2. In an effort to provide additional flexibility for participants running SIR engines, we propose the following:
    a. Allow currently restricted 2V & 3V engines <1400ccs to run unrestricted at a 100 lb weight penalty.
    b. allow all 2V and 3V restricted engines less than 1600ccs to run 1mm larger SIR as an option at a 125lb weight penalty
    c. allow all 4V restricted engines less than 1600ccs to run 1mm larger SIR as an option at a 175lb weight penalty
    d. competitors running the alternate SIR must display "+1mm" on the side of their car next to their new weight.
    e. competitors running the unrestricted option must display "UNR" on the side of their car next to their new weight.
3. Limit compression ratio to 15:1 for SIR restricted engines effective 1/1/2014

Member input sought:

We are interested in member requests for non-traditional adjustments for small unrestricted engine packages to make move them up to higher HP and higher weight including turbochargers with restrictors, custom or non-standard bore stroke, and aftermarket, non-OEM, cylinder heads.

Also, we intend to add limited prep engine options for each manufacturer in GTL, the Nissan L16 is the first of these for 2013. The proposed L16 specifications are: L16 (from Datsun 510) based on HP specs at 1950lbs: Comp. Ratio limited to 12.0:1, Valve lift limited to .450", 32mm IR choke(s) prepared to Production Category Level 2 rules, no SIR required. We would like input from drivers of cars in alternate manufacturers regarding specific limited prep engine packages. Please submit requests with supporting dynamometer and engine build data.

Lastly, we are interested in introducing a spec GT option into GTL. Our initial concept is to base this on a modified Spec Miata which would be allowed to:
1. reduce weight by 200-300 pounds through removal of components and replacement of body panels
2. run some spec alternative engine package. Perhaps limited to alternate spec cam and ECU or, alternately, with some spec turbo kit and restrictor on the current engine.
3. Free brakes
4. Racing tires

We are seeking input from members that are interested in pursuing this package and working with the CRB and GTAC to develop this specification for 2013.

American Sedan
1. #8507 (Dean Palmer) Allow 17x8 factory Mustang wheels.
Thank you for your request. The CRB and the American Sedan Advisory Committee are seeking feedback on whether the availability (or lack thereof) of 16 inch wheels for Full Preparation cars and Restricted Preparation cars running Full Preparation brakes, indicates a need to move to 17 X 8 wheels as the maximum wheel size for these cars. Please provide your comments for or against (including a suggested time frame) in a letter to the CRB through crbscca.com. The CRB will consider feedback

from active drivers and those actively building new American Sedan cars for any needed (or not needed) wheel size change beyond 2013. No current decision for the change, or a timeframe has been proposed.

MEMBER ADVISORIES

GCR

1. #8760 (SCCA Staff) Encourage Runoffs competitors to drill bolts for sealing engines.

The Club Racing Board, Runoffs Tech Workers, and National Staff would like to enhance compliance by using seals on competitors' engines at the 2012 Runoffs. Competitors are encouraged to drill holes in the heads of bolts prior to arriving at Road America. It is recommended that holes are drilled in intake manifold bolts, exhaust manifold bolts, valve cover bolts and carburetor/throttle body bolts. Competitors are also encouraged to drill holes in the heads of bolts for any other components of the car that receive inspection on a regular basis (At least two bolts should be drilled per component).

Sealing engines during qualifying is an undemanding process that takes modest time. This will decrease the competitor's time and effort spent in tech, reduce the cost of qualifying inspections for competitors, and increase the overall efficiency of the Runoffs Technical Inspections. The overall goal of sealing engines/components at the Runoffs is to limit the amount of time spent disassembling cars during qualifying sessions.

If you have any questions regarding this memo, please contact the National office at 800.770.2055 or send an email to tech@scca.com.

Note: Sealing competitors' engines is not required, only suggested. It should also be noted that this memo does not apply to classes/cars that compete with sealed motors from the engine builder (Spec Racer Ford, Formula Mazda, etc.).

Improved Touring

ITA

1. #8502 (Raymond Yergler) Explanation of Weight Increase for ITA 1.8 Miata

The ITAC and CRB are aware of the numerous discussions related to the recent change in weight for the ITA 1.8 Miata. Both bodies wish to make it clear this was not "reward" weight. Rather, a majority of both bodies felt that the incorrect stock horsepower number was used when using the IT process for setting the weight on the car. This has been corrected, and the resulting weight is within a small margin of that produced by using actual horsepower figures from dyno testing of IT builds.

NOT APPROVED BY THE CRB

GCR

None.

Formula/Sports Racing

FA

1. #8329 (Bruce Hamilton) Remove intake restriction from stock 2.3 L YDX

Thank you for your letter. While the performance of the Swift .016 continues to improve, the Swift .016 has yet to be developed to the level of well established engine/chassis platforms currently in the class. The CRB does not recommend allowing the Swift .016a to run unrestricted as this would create a significant advantage over the other engine/chassis platforms. The performance is and will continue to be closely monitored and competition adjustments will be made when data and performance warrant.

FC

1. #8043 (Mike Eakin) RFR subfloor attachment

Thank you for expressing your concern; however, the CRB has no plans to recommend a rule change.

Grand Touring

GTL

1. #8453 (Alan Hummel) remove fuel cell requirement

Thank you for your request. For safety reasons, the CRB has no plans to remove fuel cell requirements from any GT class.

2. #8536 (Club Racing Board) Minutes portion of letter 8452

Thank you for your request. The 2.2L engine is too large for GTL.

Improved Touring

ITB

1. #4253 (Robert Foley) IT Process and Arbitrary Weight Assignments and Multipliers

Thank you for your request. Please see letter #4229, June 2012 Fastrack.

IT

1. #4249 (Jake Gulick) Remove the 30% factor applied ITB/C cars in the ITACs ops man.

Thank you for your request. Please see letter #4229, June 2012 Fastrack.

Production
EP
1. #8243 (Rodger Grantham) clarify car listing of RX7 and porting definitions
Thank you for your letter. The engine this car was produced with (turbocharged) would not be eligible for classification in production.

HP
1. #8227 (Blake Meredith) Allow the use of the 2.0L engine in the 914
Thank you for your request. The 2.0 L engine is too large for HP.

Super Touring
STU
1. #8276 (Harley Johnson) Approve supercharged vehicle to compete in STU
Thank you for your request. The CRB does not recommend adding this car to STU at this time.

2. #8718 (Scott Ewing) Allow GT28RS turbo for Mini Cooper.
Thank you for your request. The CRB does not recommend turbo charging the Mini Cooper at this time in STU. The Mini is already available with Forced Induction in the Cooper S.

American Sedan
1. #8404 (Aaron Bailey) Allow use of aftermarket headers on the Restricted Preparation Camaro/Firebird
Thank you for your request. The CRB plans to watch the American Sedan class during 2013 with the newly implemented rule set to determine if additional performance modifications are required for 2014. Until results indicate such a need, headers are not planned for Restricted Preparation cars.

Touring/Showroom Stock
T
1. #8449 (Cheyne Daggett) Allow Spec Brakes in T2 and T3
Thank you for your input as the CRB develops all cars for Touring in 2013.

T2
1. #8505 (Marty Grand) Dual class Evo for 2013 season
Thank you for your input. The CRB has no plans to dual class the EVO in 2013.

T3
1. #8485 (Scott Ewing) Allow JCW head without JCW pulley
Thank you for your request. The JCW head for the Mini-Cooper is not within Touring class philosophy.

PREVIOUSLY ADDRESSED
None.

NO ACTION REQUIRED
GCR
None.

Formula/Sports Racer
1. (Multiple, 3 letters) SR1 / SR2 / SR3 GCR Specification Structure Request
Please see SCCA News June 7th, Board Votes on Club Racing Class Changes:

In the Sports Racing category, C and D Sports Racing will be combined beginning in 2014. This was the only part of the proposal for Sports Racing that was ratified by the BoD at the meeting.

In the Formula category, Formula Enterprises and Formula Mazda will remain separate classes.

2. (Multiple, 14 letters) Merger of C and D series
Please see SCCA News June 7th, Board Votes on Club Racing Class Changes:

In the Sports Racing category, C and D Sports Racing will be combined beginning in 2014. This was the only part of the proposal for Sports Racing that was ratified by the BoD at the meeting.

In the Formula category, Formula Enterprises and Formula Mazda will remain separate classes.

3. (Multiple, 71 letters) FE/FM Combination
Please see SCCA News June 7th, Board Votes on Club Racing Class Changes:

In the Sports Racing category, C and D Sports Racing will be combined beginning in 2014. This was the only part of the proposal for Sports Racing that was ratified by the BoD at the meeting.

In the Formula category, Formula Enterprises and Formula Mazda will remain separate classes.

4. (Multiple, 5 letters) Don't Change SRF Name
Please see SCCA News June 7th, Board Votes on Club Racing Class Changes:

In the Sports Racing category, C and D Sports Racing will be combined beginning in 2014. This was the only part of the proposal for Sports Racing that was ratified by the BoD at the meeting.

In the Formula category, Formula Enterprises and Formula Mazda will remain separate classes.

ASR
1. #7912 (Corey Shaw) Immediate SR2 Flat Bottom Defined

Please see SCCA News June 7th, Board Votes on Club Racing Class Changes:

In the Sports Racing category, C and D Sports Racing will be combined beginning in 2014. This was the only part of the proposal for Sports Racing that was ratified by the BoD at the meeting.

In the Formula category, Formula Enterprises and Formula Mazda will remain separate classes.

The FSRAC will not have information on the definition of an SR2 Flat Bottom until the SR2 ruleset is complete. If you would like to volunteer to be part of the committee defining the rules, please submit your resume through crbscca.com.

FV
3. #8168 (David Bowman) FV weight change
The weight proposal was rejected, thank you for your input.

Grand Touring
GTL
1. #8300 (Charles Leonard) Add additional prep line for Nissan A-14 & A15 engines
Thank you for your request. Please see letter #8749.

Improved Touring
IT
1. #4315 (Raymond Blethen) Where to get stock HP numbers?
Thank you for your letter. The committees consider all credible data collected when reviewing a request.

2. #4317 (Stephen Blethen) Reprocess the weight of the 1981-1984 Coupe with the WE engine.
Thank you for your letter. Please see letter #4315.

3. #4360 (John VanDenburgh) Please re-run 84-87 Audi Coupe GT
Thank you for your letter. Please see letter #4315.

4. #4361 (John VanDenburgh) Please classify/rerun 80-83 Audi Coupe GT
Thank you for your letter. Please see letter #4315.

Production
1. #8492 (Rick Henschel) Clarify quarter window removal.
Thank you for your letter Given the definitions of door and quarter windows the removal of the rearmost side windows on this car is allowed by the rules.

EP
1. #8084 (Robert Doernberg) Clarification of #7663 from April Fast Track
Thank you for requesting a clarification. The current rule allows the protective screen to be installed behind the stock grille even if the grille is less than 2" behind the stock opening.

Super Touring
STO
1. #8510 (Charles Rodholm) Porting of throttle body

Thank you for your request. Porting of throttle bodies in Super Touring is not permitted. The CRB is drafting a plan to aid in parity for STO for 2013.

STU
1. #8568 (James Spurling) Class euro market 3 liter motor
Thank you for your request. The STCS specifies "North American" engines, and this engine was used in the Canadian market. Thus, the engine is already compliant to the GCR. However, the CRB reminds that it is the competitor's responsibility to possess sufficient documentation on request of Scrutineering, per 9.1.4.G.

ST
1. #8683 (Dale Shoemaker) Reduce STL rear wheel drive weight adjust to 1.5 percent
Thank you for your request. The CRB does not recommend this change at this time. The CRB will continue to monitor performance.

2. #8753 (Chuck Fernandez) Floppy-Paddle-Shifters
Thank you for your letter. Sequential shifting cars are allowed in STO, with no restriction on method of actuation (manual or electronic). In addition, the car in question, the Aston Martin N24, is classified at its FIA GT4 weight, which is significantly more than what it would be given its known horsepower. Finally, at least one other car, the Ferrari 430 Challenge, also has electronic shifting.

While we appreciate your concerns, the CRB accepts that the level of preparation and equipment in STO can be significantly "higher tech" than other classes.

American Sedan
1. #8257 (Brian LaCroix) Fuel Injection
Thank you for your request. This idea is an excellent one which potentially can be considered for implementation in 2014. The CRB recognizes that with the major re-organization of the American Sedan rules for 2013, that adding this concept needs tabling for probably one year, so that the proposed rules for 2013 can be implemented and observed to continue working toward an even playing field for all cars.

However, the CRB also recognizes that this concept would indeed reduce costs for Full Preparation cars and the CRB is interested in any additional information you have that could help flesh out this concept. The ASAC will contact you directly for your ideas relating to implementation and any issues you envision with installation.

Spec Miata
None.

Touring/Showroom Stock
T2
1. #8056 (William Moore) Comments on Touring rules for 2013
Thank you for your input. The CRB is still evolving the class plans for Touring and will take your comments into consideration. Please look for updates soon.

2. #8413 (Alan Lesher) Inclusion in new T-2 specs.
Thank you for your letter. Please see the March 2012 Fastrack, Technical Bulletin, page 12. The current GCR allows the Strano package for your car.

T3
1. #8520 (Scott Ewing) Allow 205-45-16 tires
Thank you for your input. Please refer to the current GCR. 9.1.10.7.b: "All cars are allowed a section increase or decrease of 10mm or 20mm (e.g., 195 may use 175, 185, 195, 205 or 215). All cars are allowed an aspect ratio increase or decrease of 5 or 10 (e.g., 55 may use 45, 50, 60 or 65)."

SSB
1. #8409 (Alex Phelps) Competition adjustments for class consolidation
Thank you for your letter. There are changes being considered such as intakes, weight, etc. for 2013 Please check the Touring spec lines (http://scca.cdn.racersites.com/prod/assets/T-SSreorg.pdf) for current plans for your cat. This website will be updated on an as needed basis throughout 2012. The can be your early source for competition adjustment information.

RESUMES

None.

CLUB RACING TECHNICAL BULLETIN

DATE: July 20, 2012
NUMBER: TB 12-08
FROM: Club Racing Board
TO: Competitors, Stewards, and Scrutineers
SUBJECT: Errors and Omissions, Competition Adjustments, Clarifications, and Classifications

All changes are effective 8/1/2012 unless otherwise noted.

GCR
None.

Formula/Sports Racer
F5
1. #7527 (Wayne Dixon) F500 Piston Rule Correction
In section 9.1.1.E.14, correct as follows:
H.
1. ~~Kawasaki and Rotax 494/493,~~
Kawasaki: Wiseco # 2084M06800
Rotax 494:Wiseco # 2381M06950
Rotax 493: Wiseco # 2436M06950
~~2~~ Rotax 593 ~~(standard bore)~~: Wiseco # 2411M07600
~~3. Rotax 593 (0.010" overbore): Rotax P/N 420889171~~
J. Overbore pistons
3. ~~Rotax 593 engine only: see 9.1.1.E.14.I.3. K.~~ Rotax 593 engine only: Rotax OEM 0.010" overbore piston P/N420889171 is permitted. ~~Engines may be overbored as specified by Rotax so that this piston may be fitted.~~
~~L.~~ 4.The following aftermarket replacement cylinder sleeves manufactured by Los Angeles Sleeve of Santa Fe Springs, CA are for the
Rotax 493 and 494 respectively:
Rotax 493~~:~~ Part Number FL-1286 (69.5mm)
Rotax 494~~:~~ Part Number FL-1224 (69.5mm)
Note: the appearance of the port is machined as opposed to the as-cast port of the OEM sleeve and the sleeves are machined to size after installation in the cylinder casting.

Grand Touring
GT2
1. #8466 (Doug Gill) Change BLMI listing
In GT2, BLMI Model/Cars and Engines listings, change the heading as follows: ~~BLMI~~ *BMC thru Rover Group*
In GTL, BLMI Model/Cars and Engines listings, change the heading as follows: ~~BLMI~~ *BMC thru Rover Group*

GTL
1. #8452 (Alan Hummel) Clarify the GCR listing on pages 376-377
In GTL, Toyota Cars, classify the Toyota MR2 as follows:

Model	Years	Body Style	Drive-line	Wheel-base (in)	Notes
Toyota MR2	*85-89*	*2DR*	*RWD*	*91.3*	*Hood bulge allowed*

2. #8512 (Kyle Disque) Please add the GT3 Tercel wheelbase options to GTL
In GTL, Toyota Cars, Tercel, add a 95.3" wheelbase option to the spec line.

Model	Years	Body Style	Drive-line	Wheel-base (in)	Notes
Toyota Tercel	91-	2dr, 3dr	FWD	91.3/*95.3*	

Improved Touring

ITR

1. #4181 (Demetrius Mossaidis) Classify the 2004-06 Acura TSX in IT
Classify the Acura TSX in ITR as follows:

ITR	Engine Type	Bore x Stroke(mm)/ Displ. (cc)	Valves IN & EX (mm)	Comp. Ratio	Wheel-base (inch)	Wheel Dia. (inch)	Gear Ratios	Brakes Std. (mm)	Weight (lbs)	Notes:
Acura TSX (04-08)	*4 cyl DOHC*	*87 x 99 2345*	*(I) 35.15 or 36.15 (E) 30.15*	*10.5:1*	*105.1*	*17*	*3.267, 1.880, 1.355, 1.028, 0.825, 0.659*	*(F) 300 x 23 Vented Disc (R) 260 x 9 Solid Disc*	*2760*	

ITA

1. #4318 (Stephen Blethen) reprocess using the process
Correct weight of the 1987 Audi Coupe GT 2.3L in ITA to 2230:

ITA	Engine Type	Bore x Stroke(mm)/ Displ. (cc)	Valves IN & EX (mm)	Comp. Ratio	Wheel-base (inch)	Wheel Dia. (inch)	Gear Ratios	Brakes Std. (mm)	Weight (lbs)	Notes:
Audi GT Coupe (1987)	*5 Cyl SOHC*	*82.5 x 86.4 2309*	*(I) 39.5 (E) 31.0*	*8.0:1*	*99.8*	*15*	*2.85, 1.52, 0.97, 0.70, 0.54*	*(F) 256 Vented Disc (R) 245 x 10 Solid Disc*	*2230*	

2. #4869 (Demetrius Mossaidis) Classify the 2003-2005 Honda Accord DX/LX/EX 4cyl
Classifying the 03-05 Honda Accord in ITA as follows:

ITA	Engine Type	Bore x Stroke(mm)/ Displ. (cc)	Valves IN & EX (mm)	Comp. Ratio	Wheel-base (inch)	Wheel Dia. (inch)	Gear Ratios	Brakes Std. (mm)	Weight (lbs)	Notes:
Honda Accord DX/LX/EX (03-05)	*4 cyl DOHC*	*87 x 99 2345*	*(I) 35.15 (E) 30.15*	*9.7:1*	*107.9*	*16*	*3.266, 1.769, 1.147, 0.872, 0.659*	*(F) 282 x 23 Vented Disc (R) 260 x 9 Solid Disc*	*2895*	

3. #6114 (walt williams) Request classification
Classify the following Saturns in ITA as follows:

ITA	Engine Type	Bore x Stroke(mm)/ Displ. (cc)	Valves IN & EX (mm)	Comp. Ratio	Wheel-base (inch)	Wheel Dia. (inch)	Gear Ratios	Brakes Std. (mm)	Weight (lbs)	Notes:
Saturn SL2 (91-95)	*4 cyl DOHC*	*82 x 90 1901*	*(I) 32.3 (E) 27.4*	*9.5:1*	*102.4*	*15*	*3.25, 2.01, 1.42, 1.03, 0.73*	*(F) 251 x 18 Vented Disc (R) 245 x 11 Solid Disc or 200 x 30 Drum*	*2360*	

ITA	Engine Type	Bore x Stroke(mm)/ Displ. (cc)	Valves IN & EX (mm)	Comp. Ratio	Wheel-base (inch)	Wheel Dia. (inch)	Gear Ratios	Brakes Std. (mm)	Weight (lbs)	Notes:
Saturn SL2 (96-98)	*4 cyl DOHC*	*82 x 90 1901*	*(I) 32.3 (E) 27.4*	*9.5:1*	*102.4*	*15*	*3.25, 2.01, 1.42, 1.03, 0.73*	*(F) 251 x 18 Vented Disc (R) 245 x 11 Solid Disc or 200 x 30 Drum*	*2360*	

ITA	Engine Type	Bore x Stroke(mm)/ Displ. (cc)	Valves IN & EX (mm)	Comp. Ratio	Wheel-base (inch)	Wheel Dia. (inch)	Gear Ratios	Brakes Std. (mm)	Weight (lbs)	Notes:
Saturn SC / SC2 (91-96)	*4 cyl DOHC*	*82 x 90 1901*	*(I) 32.3 (E) 27.4*	*9.5:1*	*102.4*	*15*	*3.25, 2.01, 1.42, 1.03, 0.73*	*(F) 251 x 18 Vented Disc (R) 245 x 11 Solid Disc or 200 x 30 Drum*	*2360*	

ITA	Engine Type	Bore x Stroke(mm)/ Displ. (cc)	Valves IN & EX (mm)	Comp. Ratio	Wheel-base (inch)	Wheel Dia. (inch)	Gear Ratios	Brakes Std. (mm)	Weight (lbs)	Notes:
Saturn SC2 (97-98)	*4 cyl DOHC*	*82 x 90 1901*	*(I) 32.3 (E) 27.4*	*9.5:1*	*102.4*	*15*	*3.25, 2.01, 1.42, 1.03, 0.73*	*(F) 251 x 18 Vented Disc (R) 245 x 11 Solid Disc or 200 x 30 Drum*	*2360*	

4. #4387 (Terry Schappel) Classify 1999 Acura CL 2.3 in IT
Classify the 98-99 Acura CL 2.3 in ITA as follows:

ITA	Engine Type	Bore x Stroke(mm)/ Displ. (cc)	Valves IN & EX (mm)	Comp. Ratio	Wheel-base (inch)	Wheel Dia. (inch)	Gear Ratios	Brakes Std. (mm)	Weight (lbs)	Notes:
Acura CL 2.3L (98-99)	*4 cyl SOHC*	*86 x 97 2254*	*(I) 34.15 (E) 29.15*	*9.3:1*	*106.9*	*16*	*3.285, 1.807, 1.193, 0.903, 0.685*	*(F) 260 x 23 Vented Disc (R) 260 x 10 Solid Disc*	*2715*	

Production
HP
1. #8035 (Kevin Ruck) Classify 92-95 Honda Civic DX into HP
In HP, classify the Honda Civic DX 1992-1995 as follows: see attachment

HP	Prep. Level	Weight (lbs.)	Engine Type	Bore x Sroke mm.(in.)	Displ. cc./(ci)	Block Mat'l	Head/PN & Mat'l	Valves IN & EX mm/(in.)	Carb. No. & Type	Wheelbase mm/(in.)	Track (F/R) mm/(in.)
Honda Civic DX (92-95)	*2*	*2350 * 2409 ** 2468*	*4 Cyl. SOHC*	*75.0x84.5 (2.95x3.33)*	*1493 (91.11)*	*Alum*	*Alum*	*(I) 29 (1.14) (E) 25 (.98)*	*Fuel injection*	*2621(103.2)2 and 4 door 2573(101.3) 3 door*	*F1582.4(62.3) R1572.3(61.9)*

HP	Wheels (max)	Trans. Speeds	Brakes Std. (mm/ (in.))	Brakes Alt.: mm/(in.)	Notes:
Honda Civic DX (02-05)	*13x6*	*5*	*(F) 240x21(9.45x.83) vented (R) 180(7.09)drum*		*Comp. Ratio limited to 11.0:1, Valve lift limited to .390".*

2. #8774 (Club Racing Board) HP Comp Adj to Porsche 914 (TB portion of Letter #8531)
In HP, Porsche 914-4 (1.8L), change the weight as follows:
~~2150 *2204 **2258~~ *2100 *2153 **2205*

Super Touring
STO
1. #8732 (Steve Raymond) Aston Martin GT4 list as 4.7L - 2800 lb.
Classify the Aston Martin GT 4 in STO at 2900 lbs with 4.7L engine.
In STO, Aston Martin Vantage N24 (07-08), change the weight as follows: ~~2900~~ *2800*

STU
1. #7961 (John De Barros) Remove restrictor and reduce weight
In STU, World Challenge table, increase all flat plate restrictors as follows:
Acura RSX Type S ~~52mm~~ *54mm*
Acura TSX (04-08) ~~50mm~~ *52mm*
Acura TSX(2009-11) ~~48mm~~ *50mm*
Mazda 6 ~~50.4mm~~ *52.5mm*

2. #8516 (Philip Royle) Battery requirement in Super Touring
Clarify section 9.1.4.L.1 as follows:
~~The battery may be replaced with any equivalent battery of the same type. Battery may be relocated, but must be secured by a tie-down bracket and positive terminal must be covered to prevent accidental sparking.~~
Batteries are free, subject to GCR 9.3.9.
Delete section 9.1.4.L.2 (battery location and mounting)

All other restrictions revert back to existing GCR 9.3.9, "Batteries":
ST
1. #8684 (Dale Shoemaker) Allow STL Miatas same trans Tunnel Mod as STU
Clarify section 9.1.4.E.5 as follows:

~~The chassis shall not be modified to make additional clearance for the driver's seat.~~ The driver's seat shall be located in the same lateral location as the OEM seat, unless otherwise allowed on a car's spec line. *The transmission tunnel may be modified for the purpose of installing a competition driver seat. The floor pan must remain in its original position.* The floor pan must remain in its original position. The driver's seat shall be located longitudinally.

In STU, Mazda Miata, remove the entire spec line:

~~Mazda Miata/All/Chart/The transmission tunnel may be modified for the purpose of installing a competition driver seat. The floor pan must remain in its original position.~~

American Sedan
None.

Spec Miata
1. #8730 (Jim Drago) Clarify the use of shot peening.
In section 9.1.8.C.1.c.1, clarify the crankshaft language by adding the following:
"The stock Mazda Miata crankshaft must be used with no modifications except for machining to allow the use of main and rod bearings as allowed in 2 below. *Shot peening to stress relieve the crankshaft after machining is permitted.* The following table lists the permitted crankshaft for each model year and the minimum weight (not including pilot bearing or hardware)."

2. #8804 (Club Racing Board) Engine Sleeve Rule Change effective 8/1/2012

Change 9.1.8.C.1.b.2 as follows: "Cast iron cylinder liners (sleeves) as previously permitted may be used in both Regional and National racing through ~~the 2012 season~~ *6/28/13.* ~~and may not be used at the 2012 runoffs or beyond.~~ Regions may continue to allow sleeved blocks via supplemental regulations."

Touring/Showroom Stock
T2
1. #8477 (david mead) Include the 2013 Mustang GT in specs
In T2, Ford Mustang GT 5.0L (11-12), update the model years as follows: (11-~~12~~ *13*)
In T2, Ford Mustang V6 (11-12), update the model years as follows: (11-~~12~~ *13*)
In T3, Ford Mustang V6 (11-12), update the model years as follows: (11-~~12~~ *13*)

SSB
1. #8057 (Michael Collins) Rules Clarity on new spec sheet
In SSB, Mazda MX-5 Touring/Grand Touring (09-11), clarify the classification as follows:
Mazda MX-5 ~~Touring/Grand Touring~~ (09-11)
Add to the gear ratios: *3.14, 1.89, 1.33, 1.00, 0.81 (5 spd)*
Add to the notes: "*Detachable hardtop shall be installed (latches shall be replaced w/ positive fasteners), convertible top shall be removed. Factory bolt-in roll bar/cross member may be removed to facilitate roll cage installation.*"

2. #8389 (Lee Niffenegger) Revisit 2012 Honda Civic Si Classification Specification
In SSB, Honda Civic Si (2012), make the following changes:
weight: ~~3000~~ *3250*
Notes: "~~39mm flat plate restrictor required.~~"

SSC
1. #8417 (robert schader) car improvements 01-05 miata
In SSC, Mazda MX-5 / Miata (01-05), change the weight as follows: ~~2700~~ *2650*
In SSC, Toyota MR-2 Spyder 16V DOHC (01-05), change the weight as follows: ~~2650~~ *2600*

CLUB RACING COURT OF APPEALS

JUDGEMENT OF THE COURT OF APPEALS
Cooper MacNeil vs. SOM COA Ref. No. 12-07-GL
July 5, 2012

FACTS IN BRIEF

Following race 1 on Sunday, June 3, 2012 at Mid Ohio, William Moore, T2 #5, protested T2 #46 for blocking multiple times on the last lap. The COA notes the protested driver's name is not stated on the protest.

The Stewards of the Meeting (SOM), Debra LaFond, Duane Harrington, Verne Wandell, Fred McAninch, and James Green, Chairman (CSOM), held a hearing, heard witnesses, viewed a video,, and found Cooper MacNeil, driver of T2 #46, in violation of 2012 General Competition Rules (GCR) 6.11.1.B. and 6.11.1.C. According to the written decision submitted with the Observer's Report, Mr. MacNeil was moved to third (3rd) finishing position in class and placed on a four (4) event probation. Three (3) penalty points were assessed against his competition license. Mr. MacNeil appealed the SOM ruling.

DATES OF THE COURT

The SCCA Court of Appeals (COA) Jack Marr, Rick Mitchell, and Michael West, Chairman, met on June 20 and 27, and July 5, 2012 to review, hear and render a decision on the appeal.

DOCUMENTS AND OTHER EVIDENCE RECEIVED AND REVIEWED

1. Appeal letter from Cooper MacNeil, received June 12, 2012.
2. Official Observers Report and related documents including a video from Mr. MacNeil's car, received June 12, 2012.
3. E-mail statement from John Peterson (CS), received June 25, 2012.
4. E-mail statements from James Green (CSOM), received July 3 and July 5, 2012.

FINDINGS

In his appeal Mr. MacNeil asserts that the actions by the SOM were not in accordance with the 2012 GCR. Specifically he questioned:

- the timeliness of the protest
- the delay between the end of the race and notification by the SOM that he had been protested
- the severity of the penalty
- the SOM advisory to him that they had used the "2012 National Minimum Penalty Guidelines" in arriving at their assessment and the Guidelines are silent on penalties for "blocking"
- that he was not provided with the written SOM ruling following the decision.

In the course of its investigation, the Court found the following:

1. The CS failed to complete the acceptance section of the Protest form leaving it blank. The CS indicated he posted the time of filing in the upper right hand corner and initialed same which the COA found and acknowledges.
2. Mr. Moore did not enter Mr. MacNeil's name in the protested driver section on the protest form and Mr. MacNeil's address was not listed. The information was not added as part of the hearing.
3. The SOM failed to enter the date and time they received the protest from the CS. Both the CS and the SOM chair stated in follow up testimony that the form was delivered to the SOM within minutes of being accepted by the CS.
4. According to the SOM's written ruling, Mr. MacNeil was moved to third (3rd) finishing position in class. The driver notification portion of the protest decision form also reflects Mr. MacNeil was moved to 3rd in class. According to the scoring sheets from the event, Mr. MacNeil crossed the finish line 3rd in class at the end of the race. The final race results (obtained from the organizing region's website) reflect that Mr. MacNeil was moved to fourth (4th) finishing position in class based on a directive from the SOM.
5. The driver notification portion of the hearing decision form was not sent by the SOM direct to Mr. MacNeil, but to the Club Racing office. The notice was subsequently delivered to Mr. MacNeil at Road America by Joanne Jensen, Chief Steward of the June Sprints. The SOM Chair testified this was done to ensure Mr. MacNeil surrendered his competition license.

The Court spent considerable time investigating these issues to ensure all parties received a full and just hearing. The Court also extensively reviewed the video and written evidence.

The Court determined:

- Although the documents were not correctly annotated with date, time, name, etc., the Court accepts the CS and SOM Chair's testimony regarding filing time and concludes Mr. Moore's protest form was tendered within the timeframe set forth in the 2012 GCR.
- Based on testimony from the SOM Chair and review of the file documents, it is determined the SOM immediately began trying to contact Mr. MacNeil and hold a hearing. The Court determined there was no inappropriate delay in beginning the hearing process.
- Entries on the protest form and decision form were omitted, incomplete, written over, and/or incorrect in multiple places thus casting substantial doubt upon the proceedings and ruling.
- While the Court does not believe the SOM intended to impose a penalty different from their written decision, the improper action and resulting consequences are not acceptable.

DECISION

The Court of Appeals overturns the decision of the SOM in its entirety based on procedural errors. Mr. MacNeil's original finishing position will be restored, the probation penalty is vacated, and all penalty points will be removed from his license. Mr. MacNeil's competition license will be returned to him.

Mr. MacNeil's appeal is well founded and his appeal fee, less the administrative fee retained by SCCA, will be returned.

TIME TRIALS ADMINISTRATIVE COUNCIL

TTAC Minutes | July 11, 2012

The Time Trials Administrative Council met via conference call on 7/11/2012 at 7:30 PM CST.

The following members participated:

TTAC Chairman / CENDIV	Tony Machi
NORPAC	Dave Deborde
NEDIV	Matt Rowe
SWDIV	Kent Carter
SEDIV	Joe Oliviera
GLDIV	Jerry Cabe
SOPAC	Roy Mallory
BOD Liaison	Brian McCarthy, Dick Patullo Bob Horansky

Reports

Approval of Minutes (JUNE, 2012) (TONY MACHI)

Brian McCarthy advised that the marketing study was done. It was noted that none of the Council members were talked to about the various program within time trials.

Old Business

Operations Manual: Dave Deborde has setup the basic manual. The rest of the council will review to determine any additions that may be needed. Council hopes to have the final draft in place by November meeting.

Drop down tab on National Web site: the council had more discussions as the difficultly in finding information about Time Trials on the National website.

It was noted that the pop-up "What can I do with my car does not mention Time Trials.

New Business

1.Strategic Plan the Council is working on a strategic plan that looks toward maintaining the program and growth. Tony Machi submitted a first draft. The Council will review and make changes. The goal is to have it to the Board of Directors by the November meeting.

2.Discussion was had on several topics that administrators felt needed to be addressed.

a) Marketing tool:(Dan Goodman-RMDIV) What we do here for maintaining pdx/CRT is direct marketing to the folks that have attended in the past, then try to get them to bring a friend. In addition we offer a free pdx session for workers . For growth we try and tap into the autocross market - very strong here. Last time we used a half price deal for them. This worked well and reacquainted some folks with the program.
   Worker incentive works very well in the SEDIV at Road Atlanta.

b) What is the best procedure for signing off a Time Trials Driver's Log Book so that the driver gets credit toward his Club Racing competition license? Book states Chief Steward and Chief Instructor need to sign this book at each event. Is this the correct procedure? (Chuck DeProw- MIDDIV)
   The consensus of the Council was that it should be sign by the Chief Steward of the event with input from the Chief Instructor.

c) Matt Rowe-NEDIV reported he had to send some volunteers home for having alcohol present and open at a corner station at a recent NEDIV event. The problem was made more difficult because the TTR doesn't address the use of alcohol. After discussion it appeared that there is currently no reference to the use of alcohol or drugs in the TTR at any level.

Motion by Rowe, seconded by Olivera that based on *errors and omissions* that all levels of the TTR be amended to add the following language to the section entitled "General Event Guidelines" (generally found in Section 3 of the rules):

3. GENERAL EVENT GUIDELINES

***. Alcoholic Beverages, Narcotics, and Dangerous Drugs*

1. No driver, entrant, or crew may consume alcohol until all practice, racing, or track time for his group is finished for the day.

No official may consume alcohol until his duties have been completed for the day. Anyone who has consumed any alcohol on the day of an event, other than following the conclusion of his activities, shall not participate on that day, may be excluded from the balance of the event, and may be penalized. Alcohol may not be consumed until after all the day's on track activities are concluded.

2. The use at an event by any participant of any federal Schedule 1 controlled substance (including marijuana), or other drugs that affect the ability of the participant to safely participate in the event or may otherwise adversely affect the safety or integrity of the event, is specifically prohibited. Any

participant who violates this prohibition

- *shall not seek to participate in the event*
- *may be excluded from the event by the Chief Steward, Safety Steward, or the Chief of an official's specialty*
- *may be removed from the grounds by the order of the Chief Steward or Safety Steward.*

As a condition of continued participation and/or retention of any SCCA license, the participant may be required to submit to such testing procedures that may be established by SCCA in its sole discretion. Failure or refusal to submit to such testing shall be deemed a violation of the above prohibitions. However, SCCA assumes no obligation or duty to establish such testing procedures and/or to test participants on a random basis or in a specific case.

Passed unanimously

It is noted that this is an adaptation of the same rule that is in place in the GCR for Club Racing

Minutes submitted by: Tony Machi - TTAC Chairman

Comments regarding items addressed in these minutes should be directed to timetrials@scca.com

SOLO EVENTS BOARD

SOLO EVENTS BOARD | June 27, 2012

The Solo Events Board met by conference call June 27th. Attending were SEB members Dave Feighner, Bryan Nemy, Steve Hudson, Mike Simanyi, Erik Strelnieks, Richard Holden, and Dave Hardy; John Walsh and Brian McCarthy of the BOD; Doug Gill and Howard Duncan of the National Staff. These minutes are presented in topical order rather than the order discussed.

Unless noted otherwise the effective date for all rule, class, and listing change proposals herein is 1/1/*2013*

Comments regarding items published herein should be directed via the website www.sebscca.com.

COMPLIANCE

- The SEB and Staff are exploring options for additional penalties to be imposed for rule violations which involve tampering with electronic control units.

SAFETY

- The following clarification has been provided by the SSC, in response to inquiries from event organizers with regard to who may be on course: modify the first portion of 2.2.M (preceding "The Solo Safety Steward shall…") to read:

  "*All* non-participants, and participants *not currently assigned to be working,* must be kept at a safe distance from the course, particularly at the outside of turns and at the start and finish *areas*. Unless protected by substantial barriers, non-participant areas must be roped off. *Only assigned workers may be on the course unless specifically authorized by the SSS. Course workers may be positioned in areas without barriers*." (#8699)

- The SSC and SEB have reviewed the following items, and thank these members for their input:
  - Roll bar / cage comments: #7734, 7735, 7741, 7747, 7748, 7759, 7762, 7776, 7853, 8007, 8265, 8266, 8321

TIRE RACK SOLO NATIONAL CHAMPIONSHIPS

- Section D.7 of the Supplemental Regulations has been revised to read as follows:

  "7. A minimum of five minutes must have elapsed between runs for any car. This includes reruns or runs for another driver of the same car. A Grid official will be specifically assigned to handle two-driver cars and will keep a time log to assure compliance with the five-minute minimum between runs. The time shall be measured from the time the car returns to its assigned Grid space until the time that Grid personnel direct it to the Start line for its next run.

  It shall be noted that the five minute interval is a minimum; additional time between a car's runs is permissible but less is not." (#8317)

- The following has been added to the Supplemental Regulations:

  "*Formula SAE cars powered by an electric motor(s) and Formula Hybrid cars will be allowed to participate provided they comply with the safety requirements of the Solo Rules. See Section 18.5 of the Solo Rules for requirements for FSAE cars. Electric and hybrid cars will run for exhibition only, will be scored separately, and are not eligible for trophies in the FSAE class."*

AWARDS

- Nominations are requested from the membership for the Solo Cup and Driver of Eminence awards. Descriptions of these awards and lists of past winners may be found in Appendix K of the Solo rule book.

STOCK

- The SAC and SEB have reviewed the following items, and thank these members for their input:
  - #7703, 8252, 8253; BRZ classing. This car was classed in last month's Fastrack, Tech Bulletin #1.
  - #8153, Porsche strut top allowances.

STREET TOURING

- Vacancies exist on the Street Touring Advisory Committee (STAC), and the SEB encourages interested Club members to submit their qualifications in writing via www.sebscca.com.

- The STAC and SEB have reviewed the following items, and thank these members for their input:
  - #7213, 7224, 7981; motor mount comments
  - #7881, 7884, 8074, 8385, 8421; tire comments
  - #7900, 7901, 8102; catalytic converter comments

STREET PREPARED

- The following rule change proposal has been provided by the SPAC and is published here for member review and comment:
  - Add new subsection L to 15.8 as follows:

    L. Steering stops may be added provided they serve no other purpose. This does not permit modification of the steering column. (#8456)

- The SPAC has provided the following proposed set of reclassifications and listing modifications for member review and comment:
  - Current listing items:

    DSP
    - BMW
      - 3 Series (16v, NOC)
    - Chevrolet, Pontiac, Buick, Oldsmobile, & Geo
      - Storm GSi (1985-89)
    - Fiat & Bertone
      - X1/9 (all)
    - Toyota
      - Corolla FX16
    - Volkswagen
      - Corrado (all)
      - Golf & Jetta (VR6)

    FSP
    - BMW
      - 318i (NOC)
    - Chevrolet, Pontiac, Buick, Oldsmobile, Geo, & Suzuki
      - Storm (12v, base model) (1989-93)
    - Ford
      - Focus SVT
      - Focus (NOC)
    - Mazda
      - 323 (non-turbo)
      - Protégé (1989-98)
      - Protégé (1999-2003)
    - Toyota
      - Corolla GTS (AE86) (1984-87)
      - Corolla GTS (AE92, FWD) (1990-91)
    - Volkswagen
      - Rabbit, Jetta, Scirocco, Cabriolet, & Pickup (8v, A1 chassis) (1975-92)
      - Scirocco (16v)
      - Golf & Jetta (8v, A2 chassis) (1985-93)
      - Golf & Jetta (16v, A2 chassis)

- Proposed listing items:
    - *FSP*
        - *BMW*
            - *318i & 318is (E30 chassis)*
            - *318i, 318is (E36 chassis)*
        - *Chevrolet, Pontiac, Buick, Oldsmobile, Geo, & Suzuki*
            - *Storm (all)*
        - *Ford*
            - *Focus (all) (1999-2007)*
        - *Fiat & Bertone*
            - *X1/9 (all)*
        - *Mazda*
            - *323 non-turbo (1986-1989)*
            - *323, Protege, MX-3 4 cyl. (1990-1994)*
            - *Protege (1995-1998)*
        - *Toyota*
            - *Corolla FX16*
            - *Corolla GTS (all) (1984-91)*
        - *Volkswagen*
            - *Rabbit, Jetta, Scirocco, Cabriolet, & Pickup (all, A1 chassis) (1975-92)*
            - *Golf & Jetta (all, A2 chassis)*
            - *Corrado (all)*
            - *Golf, Jetta (VR6, A3 chassis)*
            - *Golf, Jetta (VR6 NOC, A4 chassis)*

- The SPAC and SEB have reviewed the following items, and thank these members for their input:
    - #7517, 7521, 7685, 7731, 8428; FSP comments. A related proposal appears elsewhere herein.
    - # 8376; aero proposal comments
    - #8457, 8458, motor mounts

STREET MODIFIED

- Vacancies exist on the Street Modified Advisory Committee (SMAC), and the SEB encourages interested Club members to submit their qualifications in writing via www.sebscca.com.

- The SEB continues to monitor SMF participation, and anticipates recommending it to the BOD for National class status in 2013, pending continued high and increasing participation numbers for the remainder of 2012.

PREPARED

- The PAC and SEB have reviewed the following item, and thank this member for the input:
    - #8407, XP weights. This subject was addressed in a previous proposal published in response to item #7239 (July Fastrack).

MODIFIED

- The MAC and SEB have reviewed the following item, and thank this member for the input:
    - #7587, Solo Vee comments

KART

- The KAC has provided the following rule change proposal for member review and comment (#8728):
    - Change 19.2.A.1 to read as follows:

        19.2 FORMULA JUNIOR

        A. CLASSES

        1. Junior A (JA)

        a. AGE: 12 years to 18 years

        b. ENGINES:

        1. Briggs & Stratton Raptor

        A. FUEL: *Gasoline*

        B. WEIGHT: *275 lbs*

C. OTHER: Balanced and blueprinted engines are allowed, but no Controlled Stock, Modified, Limited Modified or Open Motors

2. Yamaha KT-100, only heads with OEM casting "Yamaha" and cylinders with Y3 or Y4 and 787 are legal

A. FUEL: Gasoline and oil

B. WEIGHT: *315 lbs*

C. CARBURETOR: Walbro WB3A

D. EXHAUST: RLV SSX-V (4-hole)

3. Briggs & Stratton World Formula: As homologated except it is permissible to use an alternate chain/sprocket/gear (type 35).

A. FUEL: Gasoline

B. WEIGHT: 285 lbs

C. Battery may be removed

D. Older versions of the Briggs & Stratton World Formula engines may be upgraded by exchanging the ignition module and flywheel with the current production PVL ignition system (Briggs & Stratton part # 557127).

4. Rotax Mini-Max

A. FUEL: Gasoline and oil

B. WEIGHT: *315 lbs*

NOT RECOMMENDED

Stock

- #8293, move TT Quattro to GS. The SAC believes this car meets the competitive philosophy of DS.
- #8515, Mustang/Camaro move to DS. The SAC believes the previous generations of the V8 Mustangs and Camaros meet the competitive philosophy of FS at this time.

Street Touring

- #6234, Boxster in STR. The STAC believes this would negatively impact the competitive balance in the class.
- #7623, displacement allowance. The STAC does not believe this change is necessary.
- #7684, 8080, 8236, radiator allowances. The STAC does not believe these changes are consistent with the preparation philosophy of the category.
- #7690, 8375; steering wheel changes. The STAC does not believe these modifications are consistent with the preparation philosophy of the category.
- #7737, Kia Rio classing. The STAC does not believe this car is within the performance parameters of the STF class.
- #7802, 7804, steering wheel from different model. The STAC does not believe this is consistent with the preparation philosophy of the category.
- #8146, brake proportioning valve. The STAC does not believe this is consistent with the preparation philosophy of the category.
- #8294, oil windage tray. The STAC does not believe this is consistent with the preparation philosophy of the category.
- #8381, Sentra move to STF. The STAC does not believe this car is within the intended parameters of the STF class.

Street Prepared

- #8234, camber plate usage. There is no allowance for additional modifications to the center clearance hole. The SPAC does not believe such an allowance would be desirable.
- #8459, sunroof conversion. This subject was also covered in the June Fastrack.
- #8464, supercharger pulley changes.

Formula Junior

- #7318, 7393, 7856; FJ spec engine. The KAC continues to look at data related to this subject.

- #8432; 80cc kart class. The KAC feels this could dilute current participation, and the engines are now exceedingly rare; it is not recommended to create a separate class for this engine.
- #8482; FJ engine ban for Rotax. At this time, the KAC does not feel banning the Rotax would be appropriate. This engine package is popular in different parts of the country for wheel to wheel racing and the committee feels it should be an option.

TECH BULLETINS

Road Tire

1. Effective immediately upon publication, after consideration of member input the SEB has amended the specifications for the Road Tire supplemental classes such that the minimum treadwear rating is 180. (7918, 7945, 7953, 7986, 7995, 8004, 8014, 8020, 8026, 8030, 8032, 8051, 8083, 8100, 8115, 8214, 8283). The SEB believes that a higher treadwear rating for RT than for ST is consistent with the differences in levels of preparation.

Stock

2. Errors and Omissions: Per the SAC, the previously-published item (Tech Bulletin #2, July Fastrack) regarding the Mustang Shelby GT500 was incorrect in that the 2007-2012 is in BS, while the 2013 is intended to be in AS. Thus the correct new listing item should have read:

   Ford Mustang Shelby GT500 (2013) *AS* (#8255)

3. Per the SAC, the second paragraph of 13.4 is clarified as follows:

   "Wheel spacers are permitted, provided the resultant combination complies with the offset requirements of this section. Wheel studs, lug nuts, *valve stems (including pressure-relief type),* and/or bolt length may be changed."

Street Touring

4. Per the STAC, the following new listings, effective immediately upon publication, are added to Appendix A:

   Volkswagen Golf/Cabrio 2.0 8V (1999-2006) *STF* (#6932)
   Volkswagen Corrado (all) *STX* (#7619)
   Subaru Impreza 1.8L FWD (1993-1996) *STC* (#7637)
   Note: The STAC does not believe this model fits within the intended parameters of STF.
   Subaru Legacy (1990-1994) *STC* (#7651)
   Note: This provides specific classing which matches the current NOC catch-all, to allow the car to run National-level events.
   Hyundai Genesis 2.0 turbo (2010-2012) *STX* (#8217)

5. Per the STAC, further clarify 14.10.F, 5th sentence, to read as follows:

   "Any *OE OBDII (or newer)* communications port functionality must remain." (#7578)
   Note: In addition to the previously published clarification (in the April Fastrack) regarding the use of the word "standard" to mean "OE", this further refines the application to OBDII and newer systems only. Earlier systems (sometimes called OBDI), as well as proprietary car-specific ports, are not required to operate as designed. The committee's rationale is that OBDII cars are typically smog tested by plug-in checks, while earlier vehicles are tested using a tailpipe sniffer. The goal is to minimize any performance advantage that a "trailer queen" could have over a daily driver in a smog-checked area (excepting CA). Additionally, this limits stand-alone units masquerading as piggybacks.

6. Per the STAC, add to 14.8.A prior to the final sentence:

   "*Coil springs may incorporate spring rubbers.*" (#7693, 7694)

7. There is no allowance in the ST rules for the addition of heat shields to the body. (#7764)

8. The allowances of 14.9.A do not permit the shortening of a battery cable in conjunction with a battery relocation. (#7786)

9. Tech Bulletin #6 in the April Fastrack, in response to item #6978, addressed the question of non-OE engine management sensors (#7787)

Street Prepared

10. Per the SPAC, the following new listing, effective immediately upon publication, are added to Appendix A:

    Subaru Impreza 2.0i (2012) *FSP* (#7522)
    Chevrolet Camaro ZL1 (2012) *ASP* (#8327)
    Fiat 500 Abarth (2012) *DSP* (#8350)

11. Per the SPAC, there is no requirement that anything be used to replace the air conditioning condenser when the a/c system is removed (as allowed by 15.1.E), so any substitute ducting could be used to connect the blower to the heater provided it serves no other purpose. This could be considered comfort and convenience. (#8167)

RALLYCROSS BOARD

RALLYCROSS BOARD MINUTES | July 5, 2012

The RallyCross Board (RXB) met via conference call July 5. Attending were Ken Cashion, Chairman, Bob Ricker, Brent Blakely, Karl Sealander, Warren Elliott, Stephen Hyatt and Ron Foley. Also in attendance were Stephen Harris and Todd Butler, BoD liaisons, and Brian Harmer from the National office.

The Secretary acknowledges that these minutes may not be in chronological order.

Committee Reports

- RallyCross Safety Committee (Bob Ricker): Bob Ricker sent the Safety Steward Training presentation to RXB for review. Ken Cashion requested that the RXB quickly provide any feedback to Ricker. Some changes will be made regarding incident reporting. The PowerPoint presentation should be ready for use by the membership within a week.

  Ricker is working to get a Safety Steward licensed in the Indianapolis Region so that the Region can sanction events without the need of out-of-Region Safety Stewards.

  The RXB is considering the use of Safety Steward trainers in cases where Divisional Stewards may not be licensed Safety Stewards. The Rocky Mountain Division is one such case. Ken Cashion requested that Karl Sealander contact Tommy Kilpatrick to arrange a training session where the Rocky Mountain Divisional Steward would be a Safety Steward trainee.

- RallyCross Rules Committee (Warren Elliott): Warren Elliott reported that the Tuner Class proposal is ready other than it needs to be typed up. At that point it will be forwarded to the RXB for review.

  The rules proposal deadline is past and the Committee is considering the following submitted proposals:
  - Dress-up and convenience items allowed in Prepared, such as audio systems
  - Oil coolers allowance in Prepared
  - A reworking of tire allowances
  - Camber adjustment allowance in Prepared for vehicles with double wishbone suspensions
  - Adjustments to allowances on shocks in Stock.

  Highlighting of the mandatory sections will be incorporated into the 2013 RallyCross Rules (RXR).

  Tire size allowances in Stock have been questioned at the forums. The RallyCross Rules do not state that a competitor in Stock may deviate from the OEM tire size. The general consensus of the RXB is that the intent of the rule is to allow any size tire that fits the rim and that doesn't interfere with body or suspension parts. Brian Harmer suggested adding the word "any" to the rule would fix the confusion. The committee will clean up the language for the 2013 RXR. Todd Butler suggested using a Tech Bulletin to clarify the rule in the meantime.

  The SCCA and Rally America are discussing the running of an SCCA RallyCross in conjunction with a Rally America event. The first possible date would be November 17th in New Jersey.

- National Championship Committee (Brent Blakely): Brent Blakely summarized progress of National Championship planning. The schedule and worker positions are being filled.

  RXB consensus is for a larger event tent this year. Brian Harmer and the national staff will work to find one.

  Brian Harmer requested that entry payments for the National Championship be processed the Monday prior to the event rather than at the event. This practice would avoid payment problems normally encountered. Harmer also requested that the event avoid cash transactions at the event.

  Information to meet the TripleCross Award requirements will be needed prior to the National Championship. Blakely will work with the National staff to send out emails to all registered competitors prior to the event requesting information about 2012 victories at Regional and Divisional events.

- Marketing Committee (Ron Foley): Ron Foley is continuing to search for RallyCross videos without music for posting at the SCCA website.

  Foley is also working to get all results posted from past 2012 National Challenge events.

- Divisional Steward Liaison (Stephen Hyatt): No Divisional RallyCross Stewards meeting was held last month due to Jerry

Doctor's illness.

Work continues towards a replacement for the Southwest Division Steward. The current Steward has chosen an individual as a replacement. Hyatt will make the necessary contacts to get the replacement process underway.

Stephen Hyatt is encouraging all Stewards to choose a deputy as soon as possible. Recent events have accentuated the need to have a deputy steward program in place in each Division.

Recent discussions of the volunteer incentive program have suggested that it could be as simple as year-end accolades in public forums such as *SportsCar* magazine.

- Forum Activity: Some discussions at the forums have included Stock tire size allowances and numbering protocol at the National Championship.

Old Business

- Indianapolis Region scheduling: The scheduling conflicts, which were brought about in part from a lack of a Safety Steward in the Region, are practically resolved as Bob Ricker is working towards licensing a Safety Steward there. Steve Harris has been involved with the Region to resolve the issue and feels their program will be strong and cooperative in future. Ron Foley suggested that it might be time to have scheduling rules in place.

- Class champs list: Ken Cashion will gather the necessary information by next meeting.

- RXB Chairman successor: Ken Cashion will accept another two-year term as Chairman. A co-chairman is deemed not necessary by the RXB. Bob Ricker suggested that preparing a successor during last year of the term would be a good practice.

New Business

- I-80 Speedway availability: Howard Duncan sent an email to the RXB suggesting that the I-80 Speedway would be a good successor to Tulsa site. Its ownership would be amenable to hosting a National Championship and would work well on the planned 3-year rotation schedule. The site seems to hold up well to degradation, which would allow more runs with fewer course changes.

- Jerry Doctor's condition and replacement: Jerry Doctor is in long-term care and has requested that the RXB find someone to take his place as Midwest Divisional RallyCross Steward and Chairman of the stewards group. The RXB discussed several possible individuals for the two positions. Ron Foley will make those contacts at the Divisional level and Stephen Hyatt will work with the Divisional Stewards to appoint a new Chairman.

- Attendance at National Challenges: In the email to the RXB from Howard Duncan, he noted seemingly low average attendance to the National Challenges so far in 2012. He suggested reducing the number of Challenge events for 2013 and incorporating National office support for those events. The RXB discussed the situation and the options. The general sentiment of the RXB is to give the current formula a chance, but that there should also be careful examination of RallyCross statistics and demographics before making a decision. Feedback from the Divisional RallyCross Stewards at end of the season would be helpful. Howard Duncan will be on the next RXB meeting agenda to discuss the proposal further.

- National numbering 1-99: Car numbering at the National Championship has been questioned on the forums. Registration is currently set up for no duplicates of any one number across all classes. Brain Harmer proposed that the numbers 1-99 used for the first driver with the second driver adding 100. This would be applied to each class, allowing duplicate numbers between classes. After much discovery discussion, the RXB agreed to leave the car numbering as it is currently set up in registration (no duplicates of any one number across all classes), and then after the event discuss the possibility of making the numbering changes discussed above.

- Regional programs conference call: Stephen Hyatt proposed the idea of hosting a large conference call with all Regional program directors on a semi-annual basis. Discussion of the proposal is tabled until the next RXB meeting.

Next meeting: August 1, 2012

Submitted by Karl Sealander, RXB Secretary

ROAD RALLY BOARD

ROAD RALLY BOARD MINUTES | June 5, 2012

The RoadRally Board met via conference call on June 5, 2012.

In attendance: Chairman Jim Wakemen, Jeanne English, Eva Ames, Clarence Westberg, Chuck Hanson, Rich Bireta, Sasha Lanz, BOD liaisons Steve Harris and Bob Lybarger; not in attendance: Howard Duncan and Deena Rowland, National Office.

1. May Minutes approved (Hanson/Ames).

2. National Committee Report – Clarence says nothing to report. Chuck has 8 teams for his two nationals.

3. Regional Committee Report – Len Picton volunteered. Chuck says we should invite Wendy Harrison, esp on GTA committee. No other known volunteers.

4. Rich Bireta's Rally Growth document: Should we publish it? in full? in part? Eva says that if we publish in full, we are likely to get mostly nit-picky feedback. We want to solicit helpful suggestions, not criticisms; present as "This is a collection of ideas. We are soliciting ideas. Growing is a priority for the RRB." We need to keep things focused.

Steve Harris addressed strategic plans, saying they are living documents that change with input, that things get added and deleted, it should be a path to achieving goals; this Rally Growth document has ideas, but doesn't address the challenge of getting non-rally SCCA members and get non-members engaged; we need to think globally -- how do we bring in people through road rally? Where do we start? How make the rally program more visible to other programs and non members? Suggestion – Put an article about the Richta App in *Sportscar*.

How much of the Rally Growth document to publish? Rich/Sasha, move that pages 2 and 7 be stricken and the remainder of document be posted on the SCCA Forum. We are asking for additional ideas per page 20. Vote results - 4/1 in favor; Rich will give Eva the edited version, Jim will write what will go with it. Additional motion: Eva/Jeanne, move to post as four main topics (per page 3) in addition to full document; approved.

5. New business: none

6. Old business: tracker program installed by our next meeting, Jim will have training document for us, will post it in the DropBox when ready.

7. NORPAC steward – nothing to report; Eva will refresh/repost.

Meeting adjourned at 8:32.

Respectfully submitted,

Jeanne English, RRB secretary

QUICK LINKS

The following items have been removed from regular inclusion in Fastrack News and can be found on SCCA's Web site at the following links:

CLUB RACING

Runoffs Event page: http://www.scca.com/runoffs
Accredited Driver Licensing Schools: http://www.scca.com/clubracing/content.cfm?cid=50864
Forms: http://www.scca.com/downloads/#club
Technical Forms: http://www.scca.com/clubracing/content.cfm?cid=44472
General Competition Rules (GCR): http://www.scca.com/clubracing/content.cfm?cid=44472

SOLO

40th Tire Rack SCCA Solo National Championships: http://www.scca.com/solonationals
Forms: http://www.scca.com/downloads/#solo
Rulebook: http://www.scca.com/downloads/#solo

RALLY

Forms: http://www.scca.com/downloads/
Rulebooks: http://www.scca.com/downloads/

SCCA NATIONAL CONVENTION

Event page: http://www.scca.com/events/index.cfm?eid=4495

EVENT CALENDAR; http://www.scca.com/events/

Fastrack® news
official SCCA member notification
EFFECTIVE FIRST DAY OF THE MONTH UNLESS OTHERWISE NOTED September 2012

CONTENTS

BOARD OF DIRECTORS	**1**
CLUB RACING	**3**
CRB Minutes	3
Technical Bulletin	9
Court of Appeals	11
Time Trials Admin. Council	14
SOLO	**16**
SEB Minutes	16
RALLY	**20**
RallyCross	20
RoadRally	22
LINKS	**24**

BOARD OF DIRECTORS

SCCA Board of Directors Minutes | August 6, 2012

SCCA Board of Directors held a conference call Monday 6-August 2012 commencing at 7PM CDT.

Directors participating were: Dick Patullo, Jerry Wannarka, Robin Langlotz, Steve Harris, Bob Lybarger, Lisa Noble, R. David Jones, Bill Kephart, Brian McCarthy, John Walsh, Phil Creighton and Todd Butler. Michael Lewis was unable to attend due to travel. Wannarka as Chair carried proxy vote for Lewis. Jeff Dahnert, President and CEO and Terry Ozment, Vice President of Club Racing also participated in the call.

The meeting was called to order at 7PM by Chairman Wannarka.

Creighton briefed BoD on concerns and issues happening in SE Division's TTAC program. One issue is personnel related. The other issue is bringing TTAC program responsibilities and delegation of responsibilities into alignment with other Club elements such as SEB and CRB. Staff supported the delegation of responsibilities.

> **Motion**: Creighton/Langlotz. To remove the current TTAC Representative for the SE Division (Joe Olivera). Approved, Unanimous .
>
> **Motion:** Creighton/Langlotz. Appoint Craig Farr as TTAC Representative for SE Division as interim for the rest of the term ending Dec 31, 2012. Approved, Unanimous.
>
> **Motion**: Creighton/Harris. To ask the TTAC to restructure their Divisional Representative Qualification so that the TTAC Representative and the Program Manager(s) function for a Division <u>may</u> be separated. Approved, Unanimous

Lybarger and Harris briefed the BoD on current status and activities of Road Rally program and RRB. Current RRB chair Jim Wakeman has resigned.

> **Motion:** Lybarger/Harris: Approve Rich Bireta to replace Jim Wakemen as Chairman of the Road Rally Board effective immediately. Approved, Unanimous.

The Board of Directors wishes to thank Jim Wakeman for his years of service on the Road Rally Board.

Butler/Harris briefed BoD on the current status of RallyCross and specifically the RXC BoD. There was a unanimous request to replace two RXC Divisional Stewards. Both stewards resigned their current positions due to various personal reasons.

> **Motion:** Butler/Harris: Approve the recommendation of the RallyCross Board to appoint Damon Cuccia for the position of Southwest Division RallyCross Steward replacing Jim Miller and that the BoD also approve the recommendation of the RallyCross Board to appoint Jim Rowland for the position of Midwest Division RallyCross Steward replacing Jerry Doctor. Both recommendations effective immediately. Approved, unanimous.

The Board of Directors wishes to thank Jim Miller and Jerry Doctor for their years of service in RallyCross.

Patullo reviewed the clarification memo that will be circulated to membership regarding the treatment of STL at the Runoffs. STL will run with STU at the Runoffs. STL will not be crowned a class specific national championship for 2012 but they will be honored with a separate podium ceremony to recognize their Runoffs event achievements. No issues raised, agreement that this is as discussed by BoD previously.

Kephart gave an update from the Planning committee which has held multiple meetings. Director of Club Racing, Butch Kummer was hired and rapidly coming up to speed on the program. Learning from 2012 Majors pilot is being factored into the 2013 rollout. Majors will be 4 zones going forward not 3 as previously discussed.

Wannarka/Noble to discuss with SCCA Inc. staff and SCCA Pro on possible clarification of statements regarding technical clarification for car preparation rules.

Harris attended a National Solo Tour event and was very impressed with the organization and event.

Motion: Kephart/Lybarger To adjourn. Approved, Unanimous.

BoD Meeting concluded 7:40PM CDT.

CLUB RACING BOARD

SCCA Club Racing Board Minutes | August 4, 2012

The Club Racing Board met face-to-face on August 4, 2012. Participating were Jim Wheeler, Chairman; Chris Albin, Tony Ave, Fred Clark, Jim Drago, Peter Keane, Mirl Swan, and Pam Richardson, secretary. Also participating were: Todd Butler and Richard Patullo, BoD liaisons; Terry Ozment, Vice President of Club Racing; Butch Kummer, Director of Club Racing; John Bauer, Technical Manager, Club Racing; and Ryan Miles, Technical Coordinator, Club Racing. The following decisions were made:

SUGGESTED RULES FOR 2013

The following subjects will be referred to the Board of Directors for approval. Address all comments, both for and against, to the Club Racing Board. It is the BoD's policy to withhold voting on a rules change until there has been input from the membership on the presented rules. Member input is suggested and encouraged. Please send your comments via the form at www.clubracingboard.com or www.crbscca.com.

GCR

1. #7814 (Terry Ozment) Insurance Waiver for Alternate Driving Schools

Thank you for your letter. In Appendix C, add new item 2.7.E.5.d: *The driving instructor for the alternate school may witness participating student(s) sign the SCCA insurance waiver for that event.* Then change subsequent items in 2.7.E.5 from d., e., f., to: *e., f., and g.*

2. #7829 (Richard Templeton) Split Start

Thank you for your letter. Here is the recommended language which is intended to deal with the situation when a car in one segment of a split start cannot leave the grid when his segment is released but can begin before the next segment is released. This would enable that car to start at the back of his segment rather than having to wait until the end of the field.

In 6.5.2.D.6 add*: A driver in one segment who is unable to leave the grid when directed but is able to get underway before the first car in the next segment is released, may join the back of his segment at the direction of the Grid official. Otherwise, he relinquishes his grid position and will be held until the end of the last segment. For the purpose of 6.4. and 6.5.1., the field is defined as all segments.*

Formula/Sports Racer

FF/FC

1. #5636 (Formula/Sports Racer Advisory Committee) FF/FC Rules Re-write and Combination

The FSRAC submits the rule set found at: http://www.scca.com/clubracing/content.cfm?cid=44472 as a proposed rule set for FF/FC in 2013. The CRB is actively seeking feedback on this proposed rule set. Please send all feedback through the CRB letter system at crbscca.com.

Grand Touring

None.

Improved Touring

None.

Super Touring

STO

1. #8811 (John Slinkard) Turbo Charger Custom Parts Kit Numbers

Add to notes for the Honda S2000 in STO: *May use:*

1. *SST Racing Turbo Kit (roadrace) #sktur-rr*
   a. *Precision Turbo 505-5858b/505-5558b, or*
   b. *Garrett Turbo 803713-1/803712-1*
2. *SST racing exhaust manifold (roadrace) #s2kman-rr*
3. *SST racing intercooler pipe kit #s2kicp-rr*
4. *SST racing down pipe #s2kdp-rr*

STU

1. #8975 (Club Racing Board) Adjust Lotus in STU (REC Portion of 8740)

In Table A. Alternate Vehicle Allowances, STU, for Lotus Elise SC1 Lotus Exige SC, change Notes: ~~Open pulley and injectors; OEM camshaft lift at 2400 lbs. Stock SC pulley, and injectors permitted at 2200 lbs.~~ *Minimum Supercharger pulley of 2.7" diameter is allowed.*

STL
1. #8756 (ST Committee) Disallow Compression Over 11:1 in STL (TB part is 8990)

Change 9.1.4.3.D.5: 5. Compression ratio is limited to 11.0:1. ~~If an STL-eligible car has an~~

~~OEM compression ratio higher than 11.0:1 the vehicle may retain~~

~~the OEM compression ratio.~~

Production
None.

American Sedan
None.

Spec Miata
None.

Sports Racing
None.

Touring/SS
None.

WHAT DO YOU THINK?

None.

MEMBER ADVISORIES

None.

NOT APPROVED BY THE CRB
GCR
1. #8308 (Jim Creighton) Running Lights Required for ALL Cars
Thank you for your request. For those classes where rear running lights are not required, competitors may run them if they choose to. The CRB has no plans to mandate that all cars must run them.

2. #8310 (GCR Committee) Event Level E&O
Thank you for your letter. The CRB feels this can be handled within the current COA process and that no modification to the GCR is needed.

3. #8441 (John Havnen) Allow Alternate Roll Cage Designs
Thank you for your request. Please build your roll cage to the specifications in the GCR so that it will be compliant at any SCCA event. The SCCA does not issue waivers for alternate designs.

4. #8574 (Ted Johnson) accountability of advisory committee and crb officials
Thank you for your letter; however, there are sufficient controls and language in the SCCA Operations Manual to address your concerns.

5. #8856 (Richard Crowell) Allow Remote Fillers on OEM Fuel Tanks
Thank you for your letter. In classes that allow OEM fuel tanks, the entire fuel tank system must remain stock (OEM). The CRB has no plans to allow modifications to stock fuel tank systems.

Formula
None.

Grand Touring
GT
1. #8437 (Peter Zekert) Allow Taller Rear Spoilers in GT2/3/L.
Thank you for your request. The CRB has no plans to increase rear spoiler height in the GT classes.

GT2
1. #8643 (James Rogerson) Add Alternate Transmission Options
Thank you for your request. The CRB has made recent performance enhancements for the Panoz and plans to monitor these changes before considering additional changes to the Panoz spec line.

Improved Touring
ITR
1. #8798 (Dale Lagasse) Classify the 1985 Mustang.
Thank you for your request, however, this car exceeds the performance potential of ITR.

ITS
1. #8418 (Rory Osborne) Allow Non-Metallic Sunroof in IT
Thank you for your request, however, your request is not consistent with class philosophy.

ITA
1. #8433 (Mitch Schwartz) Differential Housing Rule (9.1.3.D.4.a) Change
Thank you for your request, however, your request is not consistent with class philosophy.

IT
1. #8816 (Mike Ogren) Rescind the Fuel Test Port rule for Regional Races.
Thank you for your input. The CRB has no plans to change this rule.

Super Touring
None.

Production
1. #8801 (Michael Ogren) Air Dam/Screen, Simplification
Thank you for your request. The PCS currently allows certain holes in the body work that are created by the removal of headlights, bumpers, etc. to be covered with solid panels or screen. However, if the holes exist in the stock configuration of the car and are not the result of the permitted removal of components they must remain, subject to permitted coverage by air dams, bumpers/replicas, etc.

American Sedan
1. #8566 (Jerry Hooten) Allow Aftermarket K Member
Thank you for your request. The 2013 proposed American Sedan ruleset for both Full and Restricted Preparation cars allows any oil pan or motor mounts which should solve your problem with the K-member interfering with the stock oil pan. The CRB has no plans to allow alternate K-members for any American Sedan car.

2. #8679 (B. Thomas Himes) Edelbrock Cylinder Head Specs (Define Max Port Volumes)
Thank you for your request. The CRB has no plans to list the Edelbrock Aluminum head port volumes in the American Sedan rules because the manufacturer has not agreed to provide that information officially to the SCCA.

3. #8742 (Ted Johnson) Separation of Restricted Prep and Full Prep cars
Thank you for your request. The CRB has no plans to split or create two American Sedan classes.

4. #8743 (Ted Johnson) Power to Weight Ratio
Thank you for your request. The CRB has no plans to use power to weight ratios for SCCA's American Sedan class for any purpose.

Spec Miata
None.

Sports Racing
None.

Touring/Showroom Stock
T2
1. #8548 (William Moore) Restrictor Plate/Weight
Thank you for your input. The car is classified correctly.

SSC
1. #8734 (Mark McCaughey) Proposed Restrictor Sizes and Weight Celica GTS
Thank you for your request. The car is competitive as classed.

PREVIOUSLY ADDRESSED
GCR
1. #8847 (Terry Ozment) Accept VDCA Vintage Licenses
This request was handled in RM 12-07.

Formula
None.

Grand Touring
None.

Improved Touring
None.

Production
FP
1. #8775 (Bob Maples) Classify the BMW E30 318is in FP for 2012
This was taken care of in Racing Memo RM 12-06.

American Sedan
None.

Spec Miata
None.

Sports Racing
None.

Touring/Showroom Stock
None.

NO ACTION REQUIRED
GCR
1. #8144 (Tracey Gauper) Credit Toward License Novice Permit vs. Regional
Thank you for your question. The two different ways license race credits are administered for fully licensed competitors versus Novice Permit holders is deliberate. The Club wants Novice Holders to experience full race sanctioned events as part of their learning process, and optimally that can occur on separate weekends. Fully licensed competitors will have already received those learning opportunities in their prior racing career.

2. #8302 (GCR Committee) CoA's Ability to Increase or Change a Penalty
The rule allowing the Court of Appeals to nullify, mitigate, affirm, increase, or impose a different penalty (GCR 8.4.5.A.1) enables it the latitude to respond appropriately and in proper proportion to any matter presented for consideration. The question was raised regarding the Court's ability to increase a penalty. When, for example, the SOM give an offending driver a mild penalty and the offended driver appeals, the CoA needs the ability to increase the penalty if that is appropriate. Or, when non-compliance rises to the level of deliberate cheating, the CoA needs to be able to increase a penalty. This is an authority which is traditionally exercised only sparingly.

Many Stewards enumerate the full list of potential outcomes when counseling parties with respect to the appeals process. A potential unintended consequence is that a competitor might interpret the explanation as a veiled threat which might dissuade him from appealing. This is a training issue which was referred to the Chairman of the Stewards' Program and the Executive Stewards on their July conference call.

3. #8361 (Fred Cummings) Rule Clarification
Thank you for your comments. The distinction is between refusing to submit to impound inspection versus refusing to allow teardown in the event of a mechanical protest, RFA, or CSA. The first situation is the base level which is more easily handled by an RFA or CSA but the second is a higher level circumstance which merits an automatic penalty. The other category of automatic penalties is in true spec classes where a premium is placed on cars being as nearly identical as possible.

4. #8403 (Anne Kumor) GCR 5.10.4
Thank you for your letter. GCR 5.10.4.A. does not specify that the Chief of T&S is responsible to make the PA announcement that provisional results are posted, it only requires that a PA announcement be made. Each race organization will manage that process differently and it may be that in some places, the Chief of T&S will make that announcement, but in others not.

Formula
None.

Grand Touring
None.

Improved Touring
IT
1. #8251 (Bowie Gray) Open up Ballast Rules
Thank you for your request. The rule is adequate as written.

Super Touring
STL
1. #8925 (Brian Laughlin) Add STL as a National Championship Class for 2012
Thank you for your inquiry. The Board of Directors decided to allow STL to compete at the Runoffs in 2012, but will not crown a champion until 2013.

STO
1. #8575 (Maurizio Cerasoli) Classify car for STO (Porsche 944 Turbo)
Thank you for your request. Please see letter #8580 (Technical Bulletin)

STU
1. #8820 (Chris Jurkiewicz) Intake Clarification Needed
Thank you for your question regarding throttle bodies in STU. Modification of throttle bodies in Super Touring is not permitted. It is permitted to use the OEM intake and throttle body for either the chassis or the installed engine. The S54 engine is not eligible for STU because it is over 3.2 Liters.

2. #8963 (John DeBarros) Reduce Weight and Restrictor Mazda 6 WC
Thank you for your input. The CRB will continue to monitor the competitiveness of all cars in the class.

3. #8976 (Gino Carini) Reduce Weight 300 lbs on the 2008 Acura TSX
Thank you for your input. The CRB will continue to monitor the competitiveness of case within the class.

Production
1. #8800 (Michael Ogren) Please Make Side Windows Optional
Thank you for your letter. 9.1.5.E.9.a.8.C permits the removal of all side window glass.

American Sedan
1. #8509 (Scott Sanda) Limited Prep Coolers
Thank you for your letter. Add changes to Proposed Rules located at: http://scca.cdn.racersites.com/prod/assets/Proposed2013ASRules.pdf:
Change 9.1.6.D.3.a.5: Transmission coolers are ~~not~~ permitted. *Dry Sump transmission coolers are not permitted.*

Change 9.1.6.D.3.a.11: Transmission coolers ~~may be~~ are permitted. ~~(Refer to vehicle specification line)~~ *Dry Sump transmission coolers are not permitted.*

Add 9.1.6.D.3.c.9 and 9.1.6.D.3.c.15: *Differential coolers are permitted. Dry Sump differential coolers are not permitted.*

2. #8567 (Jerry Hooten) Just say no to 16X8 wheel rule
Thank you for your request. Add to Proposed Rule Specification lines located at: http://scca.cdn.racersites.com/prod/assets/Proposed2013ASSpecLines.pdf in the Notes section for Chevrolet/Pontiac Camaro and Firebird (98-02) Restricted Preparation: Maximum wheel size 17X9.

3. #8571 (Dwaine Koscielniak) Allow Seam / Stitch Welding in AS
Thank you for your request. The CRB has determined that since the recent roll cage changes, allowing seam/stitch welding for all American Sedan cars will not provide a competitive advantage and will make cars last longer. Add to Proposed Rules located at: http://scca.cdn.racersites.com/prod/assets/Proposed2013ASRules.pdf, 9.1.6.D.7.g.4: *Seam/stitch welding is permitted.*

4. #8601 (Mark Wheaton) 2013 Proposed AS Rule Changes
Thank you for your letter. Fasteners for all American Sedan cars are free; therefore, camber bolts are permitted. See 9.1.6.D.10.a.1 in the rules proposed for 2013.

The CRB has decided not to police ECUs in American Sedan, other than the requirement that the ECU communicate through the stock OBD reader port. The CRB will add to 9.1.6.D.1.c.4, *ECUs must be able to communicate through the stock OBD reader port.*

5. #8615 (Kevin Smith) AS Rules Changes, Specifically 5.a.7
Thank you for catching this. Change 9.1.6.D.5.a.7 in the Proposed Rules located at: http://scca.cdn.racersites.com/prod/assets/Proposed2013ASRules.pdf: Mounting brackets shall be of a ~~ferrous~~ *metallic* material.

6. #8617 (Kevin Smith) Section 7.a.4 Seems to Add a New Restriction
Thank you for catching this. Change 9.1.6.D.7.a.4 in Proposed Rules located at: http://scca.cdn.racersites.com/prod/assets/Proposed2013ASRules.pdf: Any non-metallic fender liners may be used *or removed*.

7. #8620 (Smith Kevin) Request Change to GM Block Min Deck Height
Thank you for your request. In the Proposed Rules located at: http://scca.cdn.racersites.com/prod/assets/Proposed2013ASRules.pdf change 9.1.6.F ENGINE BUILD SHEETS, Block Deck Height: GM: ~~9.0070"~~ *8.9970"*-9.0430"

8. #8621 (Kevin Smith) Request Text on 4 Bolt Bearing Caps Be Moved to Block Section
Thank you for your request. In 9.1.6.F ENGINE BUILD SHEETS change Proposed Rules located at: http://scca.cdn.racersites.com/prod/assets/Proposed2013ASRules.pdf: Move

> 3. Steel main bearing caps and four bolt main bearing caps may be fitted provided no other modifications are made to any approved part or specified dimension. Blocks may be machined to accept four bolt bearing caps.

from the CRANKSHAFT section to the BLOCK section.

Spec Miata
1. #8079 (Bill Agha) Approval of OE Style Front Lip
The author requested that this letter be withdrawn.

Sports Racing
None.

Touring/Showroom Stock
T1
1. #8685 (Chuck Mathews) SCCA Club Racing T1 Class for 2013
Thank you for your input.

T2
1. #8786 (Joey Wang DeFilippis) EVO 8/9 Competitiveness With T2 Mustang
Thank you for your input.

2. #8802 (John Tecce) Adhere To the Rules and Guidelines of the Touring Category!
Thank you for your input. The CRB understands your position. Your suggestions will be taken in consideration for 2013.

RESUMES
1. #7593 (Matthew Green) Renewing Interest in ITAC
Thank you for your resume. The CRB will keep your resume on file.

CLUB RACING TECHNICAL BULLETIN

DATE: August 20, 2012
NUMBER: TB 12-09
FROM: Club Racing Board
TO: Competitors, Stewards, and Scrutineers
SUBJECT: Errors and Omissions, Competition Adjustments, Clarifications, and Classifications

All changes are effective 8/31/2012 unless otherwise noted.

GCR
None.

Formula/Sports Racer
None.

Grand Touring
None.

Improved Touring
ITB
1. #4729 (Brooke Fairbanks) Reduce the weight of the 83-88 VW Scirocco II 8V by 181 lbs.
In ITB, Volkswagen Scirocco II 8V (83-88), change weight as follows: ~~2130~~ *2080*

Production
None.

Super Touring
ST
1. #8990 (Club Racing Board) Classify cars in STU and STL (TB portion of 8756)
STU: Add to 9.1.4.2 Table A. "Alternate Vehicle Allowance"
Vehicle/Displacement/Weight/Notes
Scion FR-S/2000/Chart/4U-GSE engine may use OEM 12.5:1 compression ratio
Subaru BRZ/2000/Chart/FA20 engine may use OEM 12.5:1 compression ratio
STL: Add to 9.1.4.3 Table A. "Alternate Vehicle Allowance"
Engine/Displacement/Restrictor/Notes
Toyota 2ZZ-GE/1796/none/May use stock 11.5:1 compression ratio.

STO
1. #8580 (Maurizio Cerasoli) Corection to previous request sent 944 turbo
In STO, classify the *Porsche 944* with a displacement of *2500cc* at *2700 lbs*. Notes: *May use Jayco super 50 Turbo.*

2. #8746 (James Spurling) Please class the BMW Z3 in STO
In STO, BMW E46 M3 & E36, add the *BMW Z3* to the spec line.

STU
1. #8740 (ST Committee) Adjust Lotus in STU (REC Portion of this letter is 8975)
In STU, Lotus Elise SC / Lotus Exige SC, make the following changes:
Weight: ~~2400~~ *2200*

American Sedan
None.

Spec Miata
None.

Touring/Showroom Stock

T2

1. #8688 (randy tauro) restrictor plate - 370 Z

In T2, Nissan370Z(09-11) /370Z NISMO Edition(09-11), change the restrictor as follows:

(2) ~~40mm~~ *50mm* flat plate restrictors required.

2. #9008 (T-SS Committee) Alter Camaro restrictor verbage.

1LE-SS Track Pack permitted, Tower Brace 22756880, oil-air separator 12653074, Single Inlet Restrictor 57 mm(max) ID x .060" +/- .005", must be placed in the front of the factory throttle body manifold opening. The plate must seal the opening so that all air entering passes through the restrictor.

T3

1. #8479 (david mead) restore 275 max tire size

In T3, Ford Mustang GT (01-04) incl. Bullitt (2001), change notes to read:

H&R Race Springs (79-04 Mustangs) part #47200, includes 750-850 (progressive), 260-280 (progressive, solid axle) permitted at 3400 lbs. and *MAX* tire size ~~245~~ *275*.

CLUB RACING COURT OF APPEALS

JUDGEMENT OF THE COURT OF APPEALS
Martin Musial vs. SOM COA Ref. No. 12-08-CN
August 2, 2012

FACTS IN BRIEF

On June 17, 2012 at the June Sprints, Cooper MacNeil, driver of car #75 T2, filed a protest against car #09 T2 (Mitsubishi Evolution X) driven by Martin Musial, asking that the inlet restrictor size be verified and that various components be examined and compared to a stock unit:

- turbo inlet restrictor
- turbo inlet housing
- turbo inlet impellor
- turbo exhaust impellor
- turbo exhaust housing
- exhaust manifold

The protest was timely and filed properly.

The Stewards of the Meeting (SOM), Lin Toland, Sarah Bonnier, Ron Poth, Steve Smith and Earl Hurlbut, Chairman, held a hearing and set a bond of $930. Various parts were removed from the car by the driver. They were impounded by the SOM and delivered on June 18, 2012 to the SCCA National Office in Topeka for examination.

John Bauer and Ryan Miles of the SCCA Technical Services department measured the inlet restrictor and found it to be compliant with the 2012 General Competition Rules (GCR) and the appropriate specification pages. They then examined the components from Mr. Musial's car and compared them with stock parts provided by Mitsubishi. With the exception of the "air inlet tube" (Mitsubishi part number 1542A042), all components were found to be compliant with the GCR.

The SCCA technical staff reported the casting process used to manufacture parts of the turbo charger and the inlet tubes will leave varying amounts of flashing on the inner surface which is sometimes removed by hand grinding at the factory. The inlet tube removed from Mr. Musial's car was found to have grinding marks on the inner surface that varied from those found in the stock sample provided by Mitsubishi.

Based on the report received from the SCCA technical staff, the SOM ruled the inlet tube to be non-compliant. The SOM disqualified car #09 T2 from the event. They also placed Mr. Musial on probation for a period of three (3) months. Four (4) penalty points were assigned to his license per GCR 7.4.A & C.

Mr. Musial appealed the SOM ruling.

DATES OF THE COURT

The SCCA Court of Appeals (COA) Rick Mitchell, Tom Hoffman and Jack Marr, Chairman, met on July 26 and August 2, 2012 to review, hear and render a decision on the appeal.

DOCUMENTS AND OTHER EVIDENCE RECEIVED AND REVIEWED

1. Appeal letter from Martin Musial received July 24, 2012.
2. Letter with parts breakdown illustration from Mr. Jake Niergarth, Technical Director at TiAL Products (Garrett Performance Distributor) included with the appeal.
3. Letter from Mr. Melvin Bautista, Product Manager, Mitsubishi Motors North America included with the appeal.
4. Official Observers Report and related documents including a written report from Technical Services, received July 24, 2012.
5. E-mail statement from Earl Hurlbut (CSOM), received July 27, 2012.
6. E-mail statements from John Bauer, received July 26 & 27, 2012.
7. E-mail statement from Nonda Van Gulden (ACS Tech), received July 31, 2012.

FINDINGS

In his appeal Mr. Musial contends that the SOM erred by impounding and examining the inlet tube. He argues that the protest specifies various parts including "turbocharger inlet housing", but the "inlet tube" is not mentioned.

Mr. Musial also asserts the inlet tube is not an included part of the turbocharger assembly.

A thorough investigation by the COA shows:

- The inlet tube is a separate Mitsubishi part, is assigned a unique part number, and is not a component of the turbocharger assembly.
- There is nothing in the original protest that includes the inlet tube.
- Additionally, it is not a "manifold" as defined in the 2012 GCR Appendix F. Technical Glossary ("A passive device for conveying gases into or out of an engine, generally to achieve the connection of differing numbers of ducts.") The device in question does not fall under portions of the inspection request referencing manifolds.

The Court of Appeals therefore finds that the inlet tube was outside the scope of the protest, and should not have been impounded or inspected.

DECISION

The Court of Appeals overturns the decision of the SOM in its entirety. Mr. Musial's finishing position is restored, his probation is lifted and the penalty points assigned to his license are removed.

Any expense charged to Mr. Musial shall be returned to him. The entire bond set by the SOM ($930) is to be collected from Mr. MacNeil and distributed as follows:

- $200 to SCCA for technical services rendered.
- The amount needed to cover the return shipping of parts to Mr. Musial and Mitsubishi.
- Remaining balance to Mr. Musial.

All parts are to be returned to Mr. Musial and Mitsubishi.

Mr. Musial's appeal is well founded and his appeal fee, less the administrative fee retained by SCCA, will be returned.

CLUB RACING COURT OF APPEALS

JUDGEMENT OF THE COURT OF APPEALS
Ramon Niebla vs. SOM COA Ref. No. 12-09-NP
August 9, 2012

FACTS IN BRIEF

On July 7, 2012, following the Sonoma Sprints Group 5 race at Infineon Raceway, Paul Hill, Assistant Chief Steward (ACS), filed a Request for Action with the Stewards of the Meeting (SOM) to investigate a pass by Ramon Niebla, SM #8 on Tony D' Alessandro, E3 # 79. The SOM Dick Raymond, R. J. Gordy, Larry Svaton, Andrew Barron and Skip Yocom, Chairman, interviewed witnesses, viewed video evidence, and determined that Mr. Niebla violated 2012 GCR 6.11.1. (On Course Driver Conduct). The SOM reprimanded Mr. Niebla and assigned one penalty point to his competition license.

Mr. Niebla appealed the penalty.

DATES OF THE COURT

The SCCA Court of Appeals (COA) Tom Hoffman, Jeffrey Niess, and Michael West, Chairman, met on August 2, 2012, and August 9, 2012 to review Mr. Niebla's petition.

DOCUMENTS AND OTHER EVIDENCE RECEIVED AND REVIEWED

1. Appeal letter and related document from Ramon Niebla postmarked (U. S. Postal Service) July 25, 2012, and received August 1, 2012
2. Official Observers Report and related documents, received August 1, 2012
3. E-mail statement from Skip Yocom (SOM Chairman), received August 2, 2012

FINDINGS

2012 GCR 8.4.3.A.3. stipulates that appeals must be received by the National Office via U. S. Government postmarked mail, packets registered with a carrier service such as UPS or Federal Express, fax, or email within 10 days following delivery of the decision. The SOM delivered the decision to the appellant on July 7, 2012. The delivery date was confirmed by Mr. Niebla when he included a copy of the SOM's notification with his appeal. Mr. Niebla's appeal period began July 8, 2012, and ended with the close of business July 17, 2012. Mr. Niebla's request for appeal was submitted well after the end of the 10-day filing period as confirmed by the postmark date.

Mr. Niebla's request for appeal is not timely.

DECISION

The Court of Appeals declines to hear Mr. Niebla's appeal and his petition is returned unheard. Mr. Niebla's appeal fee will be returned.

CLUB RACING COURT OF APPEALS

JUDGEMENT OF THE COURT OF APPEALS
Steven Schuh vs. SOM COA Ref. No. 12-10-NE
August 9, 2012

FACTS IN BRIEF

On July 15, 2012, following the MARRS 8 Group 1 race at Summit Point, Kathy McLeod, Assistant Chief Steward (ACS), filed a Request for Action with the Stewards of the Meeting (SOM) to investigate a pass and contact by SRF cars #51(Daniel Hewes), #81 (Steven Schuh), and #86 (Frank Clark) at Turn 1 early in the race. The SOM Fred Brinkel, John Deonarine, and Peter Roberts, Chairman, interviewed witnesses, viewed video evidence, and determined that Steven Schuh, SRF # 81 violated 2012 GCR 6.11.1.c. & d. (On Course Driver Conduct). The SOM penalized Mr. Schuh with a three (3) event weekends probation and assigned 3 penalty points to his competition license.

Mr. Schuh is appealing the penalty.

DATES OF THE COURT

The SCCA Court of Appeals (COA) Rick Mitchell, Jeffrey Niess, and Michael West, Chairman, met on August 2, 2012, and August 9, 2012, to review Mr. Schuh's petition.

DOCUMENTS AND OTHER EVIDENCE RECEIVED AND REVIEWED

1. Appeal letter and related document from Steven Schuh received via fax submission July 30, 2012.
2. Official Observers Report and related documents, received August 1, 2012.
3. E-mail statement from Peter Roberts (Chairman, SOM), received August 2, 2012.

FINDINGS

2012 GCR 8.4.3.A.3. stipulates that appeals must be received by the National Office via U. S. Government postmarked mail, packets registered with a carrier service such as UPS/Federal Express, fax, or email within 10 days following delivery of the decision. The SOM delivered the decision to the appellant on July 15, 2012. The delivery date was confirmed by Mr. Schuh when he included a copy of the probationary license, dated July 15, 2012, with his appeal. Mr. Schuh's appeal period began July 16, 2012, and ended with the close of business July 25, 2012.

In his appeal letter Mr. Schuh states he learned of additional video evidence that might be available that would support his position. He delayed filing his petition while trying to obtain the video evidence. The Court of Appeals (COA) notes his statement, but also notes he did not advise the National Office, event officials, or the COA of his desire to appeal and request an extension of time for filing. Mr. Schuh's request for appeal was submitted after the end of the 10-day filing period as confirmed by the printed date on the fax, and he did not ask for or receive any extension of the filing period.

Mr. Schuh's request for appeal is not timely.

DECISION

The Court of Appeals declines to hear Mr. Schuh's appeal and his petition is returned unheard. Mr. Schuh's appeal fee will be returned.

TIME TRIALS ADMINISTRATIVE COUNCIL

TTAC Minutes | August 8, 2012

The Time Trials Administrative Council met via conference call on 8/8/2012 at 7:30 PM CST.
The following members participated:

TTAC Chairman / CENDIV	Tony Machi
NORPAC	Dave Deborde
SWDIV	Kent Carter
GLDIV	Jerry Cabe
SOPAC	Roy Mallory
SEDIV	Craig Farr
RMDIV	Dan Goodman
MIDDIV	Chuck DeProw
BOD Liaison	Brian McCarthy,

Also participating Phil Creighton, Robin Langlotz, Bob Horansky, and Deanna Flanagan of the National staff.

Minutes approved as submitted.
Safety Committee: (J Cabe) the committee has continued it discussions on Pop-up roll over protection and the confusion on roll bar construction between the GCR and TTR. They also talked about the request to change the rule requiring long sleeve shirts. They do not have any recommendation to the TTAC on the issues as yet.

BOD report: Phil Creighton advised the council that the BOD voted to remove Joe Olivera from the TTAC and replace him in the voting position with Craig Farr. Craig Farr has been a member at large from the SEDIV on the TTAC. The Council voted to accept him.

The BOD submitted a proposed rule change by motion: To ask the TTAC to restructure their Divisional Representative Qualification so that the TTAC Representative and the Program Manager(s) function for a Division may be separated. Reason: the TTAC rep should act like the SEB or CRB members and be involved in the overall program rules etc.

Phil Creighton explained the program manager should be responsible for the program, licensing, event supps, etc. as defined below. In many Divisions this may be the same person - the SE is too diverse and large for one person. It is also our intention to have a Program Manager for level 1 and 2 and for 3 and 4 - again because of the diversity within the Division and its size. We have successful Hillclimbs and a Track Trials Series that require different skill sets to the Level1/2 PDX etc. We would like the TTACs help in achieving the correct rules/wording to make that happen. The rule sections in question are:

From page 6 TT Rules

2.4. TT DIVISIONAL PROGRAM MANAGER - The individual appointed by the TTAC to supervise and administer SCCA policies and standards for designated classes of events and to train SCCA Stewards within each Division.

From Appendix 1 of the TT Rules MEMBERS OF THE TIME TRIALS ADMINISTRATIVE COUNCIL SHALL BE SELECTED AS FOLLOWS:

1. Each Division may designate up to two (2) representatives to serve on the TT Admin Council.

2. One of these representatives shall be designated the TT Divisional Program Manager. The other representative will serve as a member-at-large. Only TT Divisional Program Managers have voting rights on the TT Admin Council.

3. Members interested in serving as a TT Program Manager or Member at Large shall send a resume to the TT Admin Council. The appointment of each position will be reviewed by the TT Admin Council and the Club Racing Manager and their recommendation given to the Board of Directors for final approval of the appointment.

4. Each year each member of the TT Admin Council will come up for renewal review by the TT Admin Council and the Club Racing Manager.

5. All terms shall begin January 1 and end December 31.

6. Prior to January 1 each year, the TT Admin Council and the Club Racing Manager shall select a chairperson for the following year. If this person is not the TT Divisional Program Manager for that year, they shall preside in a non-voting capacity.

7. The TTAC shall be the main governing body for the Time Trials program. The TTAC will report directly to the SCCA Board of Directors via the Club Racing Manager or a liaison designated by the Board of Directors

The consensus of the TTAC was to make the changes need with the the review of the rule for 2013.

OLD BUSINESS:
Operations Manual: (D. Deborde) Dave and Roy Mallory are doing the drafting. The manual is to explain the operation of the TTAC. The philosophy is for the TTAC to have responsibility not to run events but rather to review compliance with the rules. Discussion on the wording re the Safety "Council" Committee. Jerry' Cabe noted that the TTSC is working on training and a charter for the Committee. Action – TTAC needs to review Dave's latest Draft

Strategic Plan: Tony Machi has put out a draft of the strategic plan. He asked the Council to review it. He would like to have it finished on approved for the next conference call.

NEW BUSINESS:
With three board members on the call, the chair, Tony Machi, reviewed with them the request of the TTAC to have a pull-down tab on the SCCA Website home page. It was also point out that the feature "What can I do with my car?" does not reference Time Trial activities. They promised to address it.

Dave Deborde nominated Scott Knauf to be the NORPAC representative on the TTSC. Most of the Council members had not had a chance to review his resume, but all felt that he could be approved.

Motion by Deborde, 2nd by Cabe, to approve Scott Knauf as NORPAC representative on the TimeTrials Safety Committee. Approved

Subcommittee assignments:
Secretary – Roy Mallory
Safety Committee – Jerry Cabe
Operations Manual – Dave Deborde, Roy Mallory
Rules - Jerry Cabe and Matt Rowe
Officials and Licenses- Craig Farr and Dave Deborde

Deanna reported that the National office is going to produce a flyer for Time Trial events. She asked for input and photos to use in it.

Submitted by Chairmen Tony Machi

Meeting adjourned at 8:55 PM CDT

SOLO EVENTS BOARD

SOLO EVENTS BOARD | July 25, 2012

The Solo Events Board met by conference call July 25th. Attending were SEB members Dave Feighner, Bryan Nemy, Steve Hudson, Mike Simanyi, Erik Strelnieks, Richard Holden, and Dave Hardy; John Walsh and Brian McCarthy of the BOD; Doug Gill and Brian Harmer of the National Staff. These minutes are presented in topical order rather than the order discussed.

Unless noted otherwise the effective date for all rule, class, and listing change proposals herein is 1/1/*2014*

Comments regarding items published herein should be directed via the website www.sebscca.com.

GENERAL

- The SEB will have at least one vacancy at the end of 2012. Interested members are invited to submit their qualifications in writing via www.sebscca.com.

SAFETY

- The SSC and SEB have reviewed the following items, and thank these members for their input:
  - #7570, 7574, 7722; rollover comments

TIRE RACK SOLO NATIONAL CHAMPIONSHIPS

- The SEB and Staff discussed various alternatives for compliance checks during Impound at the National Championships.

STOCK

- Vacancies exist on the Stock Advisory Committee (SAC), and the SEB encourages interested Club members to submit their qualifications in writing via www.sebscca.com.
- The SAC and SEB have reviewed the following items, and thank these members for their input:
  - #3340; ECU modifications and policing
  - #7882, 7920, 7925; ST tire comments
  - #8770; Road Tire classing
  - #8829; ECU tuning and compliance. As previously noted, the SEB is considering additional penalty options for violations of this nature.
  - #8576, 8590, 8592, 8594, 8596, 8603, 8605, 8606, 8608, 8610, 8638, 8640, 8660, 8675, 8677, 8689, 8691, 8692, 8705, 8721, 8754, 8758, 8767, 8771, 8777, 8782, 8797, 8805, 8830, 8834, 8845; Stock class move comments

STREET TOURING

- Vacancies exist on the Street Touring Advisory Committee (STAC), and the SEB encourages interested Club members to submit their qualifications in writing via www.sebscca.com.
- The SEB has withdrawn the proposal published in the July Fastrack to put the Toyo Proxes R1R 195/50-15 tire on the exclusion for the Street Touring Category in 2013. The performance of this tire has generated significant controversy and kept the Internet boards and forums humming. Despite some SEB members' concerns about the performance of this tire, the overwhelming majority of member input supported keeping it as an option for the Street Touring Classes. As a result, the SEB will not put the tire on the exclusion list for 2013.

  This does not affect the recent rule change in Road Tire to raise the tread wear rating to 180 effective 1/1/2013.

STREET PREPARED

- The SPAC and SEB have reviewed the following items, and thank these members for their input:
  - #8376; SP aero comments

STREET MODIFIED

- Vacancies exist on the Street Modified Advisory Committee (SMAC), and the SEB encourages interested Club members to submit their qualifications in writing via www.sebscca.com.
- The SMAC is seeking feedback on the following potential weight change proposal regarding class SMF:
  - Change Appendix A, Supplemental Class SMF, items under Minimum Weight Calculations to read:

    "2-seater: *1810* lbs + 125 lbs per liter"

    "4-seater: *1750* lbs + 125 lbs per liter"

"*Turbocharged or supercharged versions of all SMF engines will be classified on a basis of adding 1.0L to the actual displacement.*"

Rationale behind these changes:

A base weight increase of 200 lbs has been applied to the current SMF rule set in response to SMF competitor input, to pursue improvements to promote the growth of this supplemental class. Pre-1991 Hondas seem to be the only chassis that can easily and cost effectively reach minimum weights under the current rules. The SMAC believes a base weight increase will serve to level the playing field as well as to entice many of the later model chassis to compete (target chassis include: '96-'00 Honda Civics, '94-'01 Acura Integras, '95-'05 Dodge Neons).

When looking at weight adjustments to SMF, it also became apparent that the current SM forced induction adder may be a bit aggressive for FWD vehicles. The SMAC recommends reducing the 1.4L adder under the current SM rules to 1.0L for SMF vehicles. Useable power levels for FWD vehicles are much lower and FWD vehicles typically have lower displacement engines. For these reasons, SMF vehicles should have a forced induction adder that is more specific to their configurations.

PREPARED

- The previously-published proposal to move certain BP cars into FP has been withdrawn per recommendation of the PAC (#8599, 8612, 8645, 8651, 8663, 8723, 8744, 8773).
- The PAC has recommended the following package of rule change proposals for 2014, which is provided here for member review and comment:
  - Revise Section 17.11.A. to read as follows:

    17.11.A. Vehicles prepared *to either the current Club Racing GT or Production category rules* are permitted to compete in their respective Prepared classes. Minimum weight will be 110% of the Solo® minimum weight from Appendix A, plus any Solo® weight penalties (wheel size penalties, etc.). *Vehicles taking advantage of this allowance may only use the Current Club Racing GCR (General Competition Rules) allowances.*

  - Add the following allowances immediately prior to the Appendix A car listings for C Prepared:

    The following allowances are permitted but shall incur an additional 10% weight penalty over the Appendix A Min weights:

    Wheelbase variation in excess of 17.8.B.4.

    Subframe and frame replacement (tube frame vehicles)

    Replacement of body panels in excess of 17.2.S.

    Non stock engine placement. The #1 spark plug cannot be placed behind the front spindles.

    Front splitters that extend up to 2" beyond the bodywork when viewed from above.

  NOTE: These changes more fully separate the Solo Rules from the Club Racing GCR, with specific focus on eliminating the mix-and-match allowance of 17.11.A.

- The PAC and SEB have reviewed the following items, and thank these members for the input:
  - #8314; Fiat 500 listing proposal
  - #8581; steering column comments

MODIFIED

- In response to member input, the MAC has provided the following amended version of its previously-published proposal package regarding Solo Vees:
  - Move subsection B in its entirety from under Modified Class F into Modified Class C.
  - Move subsections C, D, and E from under Modified Class F into Modified Class C.
  - Remove the "Solo Vee" under subsection F under Modified Class F, and create a corresponding item under the Solo Vee rules as moved into Modified Class C.

    Comment: The MAC neither intends nor expects the competitive position of the FF platform to change with this move. (#8586, 8593, 8595, 8602, 8622, 8626, 8628, 8629, 8632, 8637, 8652, 8655, 8661, 8680, 8681, 8698, 8704, 8745)

- The following rule change proposals have been recommended by the MAC, in response to member input, and are published here for review and comment:
  - Change 18.1.F.5 to read as follows:

"Closed undersides or belly pans (lower surface) are permitted. The entire length of the underbody may be closed off to smooth the underside of the car. The belly pan shall be flat within 1 inch total deviation. No tunnels or other underbody aerodynamic features are permitted. Chassis rake is free. Additionally, no side skirt or body side, etc., may extend more than 1 cm below this lower surface anywhere on the car to the rear of the front axle unless specifically permitted by these rules." (#8425, 8494, 8498)

- Add to 18.1.F.5, immediately after "...within 1 inch total deviation." as follows:

  "*The belly pan width may not extend beyond the top view outline of the floor pan, except as part of a SCCA-approved GT-1 bodywork package for the specific make and model.*"

  Comment: the constraints on floor pan width are covered in 18.1.C.1.h and 18.1.C.2.d.

NOT RECOMMENDED

Safety

- 7853; roll hoop proposal

Stock

- #8277; shock adjustment allowance. Per the SAC, the addition of allowances regarding modification to standard structural components for the purpose of shock adjustment is not in keeping with the spirit of the Stock category.
- #8625; Audi RS4, S4, S5 classing. Per the SAC, the Audi vehicles currently classed in BS do not fit the current competitive balance of FS, given their horsepower and drivetrain configurations. The SAC will continue to monitor additional vehicles that may be in keeping with the competitive balance of the proposed FS moves.
- #8696; Miata move to ES proposal. Per the SAC, the 1999-2005 Mazda Miata does not fit within the current competitive balance of ES.
- #8772; S2000CR classing. The SAC believes this car is consistent with the current competitive balance of BS.
- #8823; clutch allowance. Per the SAC, the allowances found in the preamble of Section 13 authorizing normally expendable parts(including clutch disks) being replaced with factory equivalent replacements adequately serves the needs of the Stock Category.
- #8828; Honda Fit EV classing. The 2013 Honda Fit EV does not have any published measurement data that enable an SSF calculation. Its height is more than its average track and therefore it is not classed due to current guidelines regarding rollover safety.

Modified

- #8055; FM width allowance. The MAC prefers to retain the current extent of GCR compatibility for these cars.
- #8425; remove aero allowances. Some of these topics are covered elsewhere herein.
- #8494; remove aero allowances. Some of these topics are covered elsewhere herein.

TECH BULLETINS

Stock

1. The following is provided as a clarification to 13.2.J: Add after the third sentence as follows:

   "*Removable seat headrests may be repositioned using the original mounting hardware, only if the OE components permit it with no modifications. This includes removing a headrest and reinstalling it backwards.*"
   NOTE: this allows a removable driver's headrest to be reinstalled facing backwards, to facilitate wearing a helmet. (#8841)

2. The 2013 Ford Mustang GT500 was classed in a the July Fastrack, Tech Bulletin #2. (#8759)

Street Touring

3. The previously-published (May Fastrack) Tech Bulletin which lists the Fiat 500 in STF does not include the Abarth model. The STAC is presently determining the most appropriate class in which to place the Abarth.

Street Prepared

4. Per the SPAC, 15.1.E contains no requirement that anything be used to replace the a/c condensor, so anything could be used to route ducting to the heater provided it serves no other purpose. This could be considered a comfort and convenience item. (#8167, 8879)

Prepared

5. Per the PAC, effective immediately upon publication, the following new listing is added in Appendix A in class G Prepared:

Geo

Metro 13BA (1989-1994) 13x7 1.42/1.18 58.4/57.4

1298cc 1300

Fuel Inj

Comp ratio limited to 11.0:1, valve lift to 0.450"

NOTE: this car is very similar to the already-classed Suzuki Swift.

Formula Junior

6. Effective immediately upon publication, Section 19.2.A.2.a is amended to read as follows:

   "a. AGE: 8 years to *12* years"

   NOTE: This permits an FJ driver who is 12 years of age to run either FJA or FJB. The SEB felt it was unfair to force a FJB driver to move up to FJA as soon as they turn 12. Their birthday can be in the middle of the season and the change can be very disruptive.

Modified

7. Per the MAC, the last sentence of section 18.1.F.1 is clarified to read as follows:

   "No bargeboards, ramps, vanes, wickerbills, or other aerodynamic devices are allowed except as specified *herein or as part of a SCCA-approved GT-1 bodywork package for the specific make and model*." (#8398)

   Comment: This clarifies the intent to provide consistency with the GT-1 specific bodywork allowances of 18.1.F.2.

8. Per the MAC, The recognizability requirement of 18.1.B.1 applies to the car as a whole, not to individual views from specific directions. A zoomed view from a particular angle of a portion of the bodywork may not be immediately recognizable as the applicable make and model, but the car can still meet the requirement if wider views of the whole car show enough to readily identify it. Specific recognizability features are not defined; each Protest Committee must determine if a protested vehicle meets their expectations in this regard. (#8426)

9. Per the MAC, the allowances and restrictions of 18.1, including 18.1.F.1 and 18.1.F.5, do not permit underbody vanes or other airflow devices to be implemented on a belly pan, regardless of whether their maximum heights/depths are within a total variation of 1 inch. The flat belly pan 1 inch deviation allowance of 18.1.F.5 is provided to account for incidental manufacturing variations, not aerodynamic features. (#8398, 8497, 8498)

10. Per the MAC, the allowances of 18.1.F.5 permit a fuel cell to be shaped to contribute to diffuser flow, but the length of the shaped portion of the cell is included in determining the overall effective diffuser length, which is limited to a total of 25 inches. (#8398, 8497, 8498)

RALLYCROSS BOARD

RALLYCROSS BOARD MINUTES | August 1, 2012

The RallyCross Board (RXB) met via conference call August 1. Attending were Ken Cashion, Chairman, Brent Blakely, Karl Sealander, Warren Elliott, Stephen Hyatt and Ron Foley. Also in attendance were Todd Butler, Stephen Harris, and Brian McCarthy, BoD liaisons, and Brian Harmer from the National office.

The Secretary acknowledges that these minutes may not be in chronological order.

Committee Reports

- RallyCross Safety Committee: The Safety Steward Training presentation will be completed within the next two weeks and then given to the National office staff to make available at the website.

  The process of getting an Indianapolis Region Safety Steward licensed remains pending.

  Karl Sealander contacted Tommy Kilpatrick to arrange a Safety Steward training session in Colorado. This will occur in August or September in conjunction with an event.

- RallyCross Rules Committee (Warren Elliott): The rules proposals for 2013 are posted at the forum and ready for member comment. Member comment period is August 1 through September 15.

  The Tuner class rules proposal was sent to RXB for comment. Brian Harmer from the National office suggested a few clarifications that he thought could be accomplished by defining up front the philosophy of the class. Elliott will make changes in preparation for posting to the forums. If there is enough interest (minimum 5 entries) an exhibition class may be offered at the 2012 National Championship.

  A tech bulletin will be issued clarifying that for the Stock Categories any tire size is allowed as long as it fits on the stock rim and doesn't interfere with suspension or body parts.

- National Championship Committee (Brent Blakely): Brent Blakely has nearly all the worker positions filled and should soon have an organizational chart ready to distribute to the RXB. The RXB discussed possible course designers for the event. The RXB also discussed using local Safety Stewards to assist the event Safety Stewards.

  Blakely has been in contact with the local organizers who have indicated that more land may be available to the event this year. This could provide a dedicated area for the Test and Tune and thus a larger area for the event courses.

  The schedule is being finalized. A town hall discussion is being planned for Saturday night with a moderator assigned as a worker assignment.

- Marketing Committee (Ron Foley): Ron Foley is working with Ken Cashion to publish an open invitation to the National Championship in the next issue of *SportsCar*. Foley will work with Warren Elliott to do another "Who's Going to Win" thread on the forums.

  Foley has recruited the help of Jacob Perkins to provide appropriate RallyCross videos for the SCCA website. He is proactive and his videos are good.

  Foley is working with Team O'Neil Rally School to provide a school certificate given as the Hard Luck Award at the 2012 National Championship.

- Divisional Steward Liaison (Stephen Hyatt): Vacancies in the RallyCross Steward positions in the Southwest Division and the Midwest Division were discussed by the RXB and concluded with the following motions.

  Motion: To recommend to the Board of Directors the appointment of Damon Cuccia as Southwest Division RallyCross Steward. Hyatt/Foley. Not present: Ricker. **PASSED unanimously.**

  Motion: To recommend to the Board of Directors the appointment of Jim Rowland as Midwest Division RallyCross Steward. Hyatt/Foley. Not present: Ricker. **PASSED unanimously.**

  Hyatt reported that three Division RallyCross Stewards have chosen deputy stewards and the others are working to find deputies. Hyatt will get all deputy stewards included on future Steward conference calls.

Hyatt reported that a new Divisional Stewards' chairman has not yet stepped forward. The RXB discussed those Stewards best qualified for the position and requested that the respective liaisons contact their Stewards to encourage them to volunteer for the position. Hyatt is currently assuming the role in conducting the monthly conference calls.

Hyatt will organize a Regional programs conference call beginning the first week of September and recurring every 4 months after that. This will be a conference call where all Regional program directors can meet and discuss various RallyCross topics and their programs' needs. Ken Cashion will moderate the call.

Due to scheduling challenges, the Northeast Division has requested that their National Challenge be permitted to take place in late October after the National Championship. The RXB discussed the request and concluded that although it is not ideal it will be permitted based on the circumstances.

- Forum Activity: The discussions at the Forum in the past month have been light but have increased as the proposed 2013 RallyCross Rules changes were released for member comment.

Old Business

- Indianapolis Region scheduling: The scheduling issues in the Indianapolis Region have been worked out. Coordination of Safety Stewards within the Division will be required until the Region has its own licensed Safety Steward.

- Class champs list (Ken Cashion): All information has been gathered except for 2006. Ron Foley will forward that year's results to Cashion for its inclusion. All class champions will be listed in the next edition of the RallyCross Rules.

New Business

- 2013 National Challenge proposal (Howard Duncan): Tabled until next meeting.

Next meeting: September 5, 2012

Submitted by Karl Sealander, RXB Secretary

ROAD RALLY BOARD

ROAD RALLY BOARD MINUTES | July 3, 2012

The RoadRally Board met via conference call on July 3, 2012.

In attendance: Chairman Jim Wakemen, Jeanne English, Clarence Westberg, Chuck Hanson, Rich Bireta, Sasha Lanz, Howard Duncan and Deena Rowland, National Office, BOD liaisons Steve Harris and Bob Lybarger; not in attendance: Eva Ames.

June minutes approved.

1. Wakemen announced that because of other commitments he is stepping down as chairman. Motion (Hanson/Westberg): Rich Bireta be named vice-chairman of the RRB. Passed. (As Vice-chair, Rich can take over for Jim for the rest of the year without needing BOD approval.)

2. Motion by Bireta via email: I move that the RRB accept the recommendation in Chuck Hanson's memo dated 7/1/2012 and allow the Indianapolis Region to rescore the International Road National Course Rally as indicated, distribute the revised results as they appear in the Dropbox and arrange for the redistribution of awards. Bireta/Westberg; passed.

3. Restructure the National Events Committee – Motion (Lanz/Hanson): That the structure of the National Events Committee be changed from a composition of three RRB members, to a composition of 3 SCCA members plus a liaison from the RRB. Passed. Chuck and Clarence both volunteered to be the liaison, send your vote to Rich by Monday, July 9. Re the National Subcommittee Motion (in the Dropbox, revised July 3) – calendar requests go to Deena in the Rally/Solo Dept., who will then forward the dates to the NEC; the NEC will work to develop *and manage* the National Program and Championship, which includes setting procedures. Comment from Steve Harris – the BOD appoints the RRB, the RRB is free to create its own committees.

4. Proposal for 2013 (from Bob DeMeritt, in Dropbox, originally posted on Yahoo list), comments:

1: simplify/streamline paperwork for regionals and non-scca groups interested in joint events; move info on-line; multi-purpose single form (combine Audit, Results, and Weekend Member reporting into a single form); Chuck will come up with a form proposal (final decision was to wait on this because such a form is already in development).

2. all 'Rally' – just one championship? This is good item for new national committee – Hanson/Lanz: move that item 2 go to NEC. Passed.

3, 4, 5 – all sort of the same issues…

Motion (Hanson/English): Give the whole proposal to the new National Events Committee, let them set their own timetable and agenda. Passed. Duncan – SCCA might be able to pay for a face-to-face meeting of this committee. Also, after this committee gets going, we need to get to work on Regional event growth.

5. Motion (Lanz/Hanson): That the structure of the Publicity Committee be changed from a composition of an RRB member as Chairman, to a composition of a number of SCCA members plus a liaison from the RRB. Passed.

6. Old Business – issues tracker, Jim was to do it, not done yet, Rich will contact Brian (national office) to set it up.

Next meeting Tuesday, August 7, 2012, via conference call.

Meeting adjourned at 9:22 pm CDT.

Respectfully submitted,

Jeanne English, RRB Secretary

ROAD RALLY BOARD

ROAD RALLY BOARD MINUTES | August 7, 2012

The RoadRally Board met via conference call on August 7, 2012; called to order at 7:32 pm CDT.

In attendance: Chairman Rich Bireta, Jeanne English, Chuck Hanson, Sasha Lanz, Eva Ames, Deena Rowland from the National Office, BOD liaisons Steve Harris and Bob Lybarger; not in attendance: Clarence Westberg, Jim Wakemen, Howard Duncan.

Steve Harris reported that the BOD approved Rich Bireta as Chairman to lead us "onward and upward". He also reported that the BOD does not think that rally is dead; they want to make SCCA the premier rally organization in the country.

1. July minutes approved (Hanson/Lanz/passed)

2. Old Business:
   1) Issues Tracker: Rich talked to Jim after our July meeting, and found that it's an open source software package on the web used to assign "to do" items; Rich suggest that we table this for the indefinite future; Sasha commented that we have 'lost' some items in the past, which is why tracker was suggested; Chuck commented that with RRB turnover, it is easy to lose track of things (such as Lifetime Points basis of scoring), that whenever something is introduced, we need to keep track of it; Rich agreed with Sasha and Chuck, and thought that, in fact, the list should be made public. Sasha took an action item to send the list of issues that he has passed around before to Rich, to be updated and published. Rich asked that everyone commit to doing something for the RRB (see closing item).
   2) National Events Committee liaison and membership: Clarence has been selected as the RRB liaison; Mike Thompson and Bob Demerritt have volunteered to serve as members; we need one more member – Jeanne will talk to someone in Southern California about joining this committee, and we will also repost it to the SCCA Forum. Chuck said that he had some concerns about the lack of geographic and disciplinary diversity, but that the person being suggested as an addition would help. More diversity is really needed!
   3) 2013 USRRC Location: No Region has stepped forth as of this date; Chuck reported that Indianapolis is not ready for 2013 but may be for 2014, they want to do another double national first. We will repost the solicitation for regions to host the 2013 USRRC on the SCCA Forum. We will review the format of the event in September; do we need to change the format? Drop GTA? The On Rallying column in the current issue of *Sportscar* was fairly negative about the future of rally. Chuck and Jeanne both said that national rallies need to be simpler/easier (people make their own traps) and fun, so that people will come back; the National Events Committee needs to be on the same track. **Motion** (Hanson/Lanz/passed): Repost on the SCCA Forum the invitation to host the 2013 USRRC, and that the RRB is open to the region proposing a format that is not necessarily 1 course rally, 1 tour rally, and 1 GTA rally.
   4) The 'What Can I Do With My Car' part of the SCCA website still does not show road rally as something that all cars can do; Deena has been asking to get this done, and will keep nagging the tech folks to get this done.
   5) National events: Jeanne reported on the recent Tucson nationals, there were a number of problems (but great scenery!); Clarence reported (via email) that Oktoberally is done, measured, and ready for precheck which will most likely be Labor Day; no report from Jim about the DC events; Chuck will be doing the prechecks for the USRRC events; Sasha has nothing to report for the Hurdle GTA rally.

3. New Business:
   1) We reviewed the process for getting the RRB Minutes published in FasTrack; the deadline to submit them to Melissa in the National Office is the 13th of the month; Jeanne will get the minutes done in a more timely manner.
   2) Rich asked about an annual RRB calendar, listing what recurring tasks need to be done in which months. Is there already such a list? Each of us is to make a list, forward it to Rich, he will compile a list, which we will discuss at our Sept meeting.
   3) Are there any rules changes for 2013? Chuck said that the Experience Based Categories proposal, based on other than Lifetime points, is still to be done; it was posted on the Forum (Experience Categories Proposal by Jim Wakemen, Feb 22, 2012); is there time to do this for next year? Chuck will look at the comments on the Forum, and report back to us at next meeting; and then we will tell Rules Committee. No other changes for next year.
   4) Rally calendar at scca.com/forms. There was discussion about types of calendars, what they do, what is on the calendars; the Rally Events list on the SCCA Rally page (sanctioned items listed one after the other), Jeanne's calendar (an 'at a glance' spreadsheet that has any events she has heard about/been notified of); both are useful; Jeanne will get hers up to date, with posting once a month.

Closing remarks from Rich: thanks for the opportunity, and vote of confidence, in choosing me as the RRB Chairman; we need to devote ourselves to keep the national program going, with emphasis on growing regional programs; let's focus on the positive - not that only 0.4% of SCCA members do rally, but rather that 10% of regions have rally programs; Rich will serve thru December of 2013, and can be reached at rbireta@us.ibm.com or 785-691-7437 cell; he hopes to talk each RRB member offline at least once a month. Finally, let's all commit to doing something for the RRB this month.

Next meeting Tuesday, Sept 4, 2012, via conference call.

Meeting adjourned at 9:11 pm CDT (Jeanne/Chuck/passed)

Respectfully submitted,

Jeanne English, RRB Secretary

QUICK LINKS

The following items have been removed from regular inclusion in Fastrack News and can be found on SCCA's Web site at the following links:

CLUB RACING

Runoffs Event page: http://www.scca.com/runoffs
Accredited Driver Licensing Schools: http://www.scca.com/clubracing/content.cfm?cid=50864
Forms: http://www.scca.com/downloads/#club
Technical Forms: http://www.scca.com/clubracing/content.cfm?cid=44472
General Competition Rules (GCR): http://www.scca.com/clubracing/content.cfm?cid=44472

SOLO

40th Tire Rack SCCA Solo National Championships: http://www.scca.com/solonationals
Forms: http://www.scca.com/downloads/#solo
Rulebook: http://www.scca.com/downloads/#solo

RALLY

Forms: http://www.scca.com/downloads/
Rulebooks: http://www.scca.com/downloads/

SCCA NATIONAL CONVENTION

Event page: http://www.scca.com/events/index.cfm?eid=4495

EVENT CALENDAR: http://www.scca.com/events/

official SCCA member notification

Fastrack news

EFFECTIVE FIRST DAY OF THE MONTH UNLESS OTHERWISE NOTED October 2012

CONTENTS

BOARD OF DIRECTORS	**None**
CLUB RACING	**1**
CRB Minutes	1
Technical Bulletin	8
Court of Appeals	11
Time Trials Admin. Council	12
SOLO	**14**
SEB Minutes	14
RALLY	**28**
RallyCross	28
RoadRally	30
LINKS	**32**

CLUB RACING BOARD

SCCA Club Racing Board Minutes | September 4, 2012

The Club Racing Board met by teleconference on September 4, 2012. Participating were Jim Wheeler, Chairman; Chris Albin, Fred Clark, Jim Drago, Peter Keane, Mirl Swan, and Pam Richardson, secretary. Also participating were: Todd Butler and Richard Patullo, BoD liaisons; Terry Ozment, Vice President of Club Racing; Butch Kummer, Director of Club Racing; John Bauer, Technical Manager, Club Racing; and Bob Dowie, Advisor to the CRB. The following decisions were made:

SUGGESTED RULES FOR 2013

The following subjects will be referred to the Board of Directors for approval. Address all comments, both for and against, to the Club Racing Board. It is the BoD's policy to withhold voting on a rules change until there has been input from the membership on the presented rules. Member input is suggested and encouraged. Please send your comments via the form at www.clubracingboard.com or www.crbscca.com.

GCR

1. #7812 (Terry Ozment) Change in 15-year old Licensing
Change Appendix C, 2.6.B, D and E:

2.6 15 Year Old Novice Permits *and Licensing*

B. A 15 Year-Old Novice Permit will be issued in the form of a Novice Permit with a distinctive cover. It must be used for all driver school and regional race events until the driver reaches the age of 16. If the requirements for a *Regional or* National license are satisfied before the permit holder turns 16, the 15 Year-Old Novice Permit shall be returned to the Club Racing Office, with the appropriate license fee, to be replaced by a *Regional or* National license. If the requirements for a Regional license are not fulfilled by the time the driver reaches the age of 16, the 15 Year-Old Novice Permit shall be returned to the Club Racing Office to be replaced by a Novice Permit. Any successfully completed Driver Schools and races will be transferred to the Novice Permit.

D. At every driver school and every race *before the permit holder is licensed*, ~~the permit must be presented~~ *he must present the Novice Permit* to the Chief Steward before participating in any on-track session. The Chief Steward will complete the appropriate permit page at the end of the event.

E. At any event before the permit holder is licensed (school or race), the Chief Steward may recommend revocation of the permit.

2. #8702 (Terry Ozment) Review of Annual Tech Timelines
Thank you for your suggestion. Delete from 5.9.2.C: C. Re-inspection
~~o. The Vehicle Logbook indicates no competition for 3 months or more during the current year;~~

3. #9046 (SCCA Staff) Require minimum windshield thickness in GCR section 9
Change GCR section 9.1.4.F.8: 8. All vehicles must use a stock, OEM equivalent, safety glass windshield, or ~~0.25 inch~~ *a 6 mm* minimum thickness *polycarbonate (*Lexan-*type)* replacement, mounted in the stock location, at the stock angle and maintaining the stock profile.

Add GCR section 9.3.56 as follows:

9.3.56 ALTERNATE WINDSHIELDS/REAR WINDOWS
Polycarbonate windshields and rear windows such as Lexan are allowed except in Improved Touring, American Sedan, B-Spec, Spec Miata, and Touring. Alternate windshields must be of 6mm minimum thickness. In those classes where polycarbonate windshields and rear windows are allowed, the following is required:

A. Alternate windshields must be of 6 mm minimum thickness.
B. Windshield safety clips and rear window safety straps shall be installed on all closed cars.

C. Three clips (3 inch X 1 inch X 1/8 inch) shall be bolted or riveted to the body at the top of the windshield.
D. Two clips (3 inch X 1 inch X 1/8 inch) shall be bolted or riveted to the cowl and exend over the bottom edge of the windshield. Clips shall be spaced a minimum of 12 inches apart.
E. It is required that three 1 inch wide strips of steel or aluminum be installed behind the windshield to support it from collapsing inwards if it becomes damaged. The rear window shall be secured with two metal straps (1 inch wide X 1/8 inch thick) bolted or riveted to the body at the top and bottome of the rear window.

Formula/Sports Racer
FA
1. #9030 (David Arken) FA Engine Table
The CRB recommends the following changes to the FA engine table based on member input the committee has received. Although the new engine table restricts the class to specific engines, the intent is not to eliminate any current engines in FA. Furthermore, the CRB recognizes the desire by some drivers to develop new engines for the class, and the CRB will consider all proposals for specific engine combinations that are submitted to the CRB on a case by case basis. The proposals shall include a proposed SIR and weight combination along with any data supporting potential horsepower and torque numbers for the specific engine.

Change 9.1.1.A.2.a.: a. Engines shall be derived from automobiles and may be prepared for competition in accordance with SCCA GT preparation rules, except as specified in the Table below. *OEM blocks and heads must be used except when noted in the FA Engine Tables.*

Change 9.1.1.A.2.b.19: 19. The compression ratio may be increased by machining, using any head gasket(s), or eliminating of head gasket(s), *unless otherwise noted in the FA Engine Table at http://www.scca.com/clubracing/content.cfm?cid=44472.*

S2
1. #8799 (Tony Sleath) Mazda Engine Rules Updates
Thank you for your letter. The CRB agrees that, since this class is part of the SR reorganization for 2014, these changes can be made for 2013. Change 9.1.9.B:

6. Engine (Mazda MZR)

b. Pistons, crankshaft, and connecting rods may be replaced only with standard, original Mazda production parts. The connecting rods may not be bored or remanufactured in any way. Standard oversize and undersize main or connecting rod bearings are permitted. Reduction of the width of the standard bearings is not permitted. Replacement main bearings must be standard Mazda or Cosworth KK3481. Replacement connecting rod bearings must be standard Mazda or Cosworth KK3483. *Any rod bolts may be used.*

e. Flywheel: The minimum weight is 5 pounds. Any *one piece flywheel may be used.* ~~weight removed from the flywheel must come from the clutch plate surface. Only the Mazda LFG2-11-500 ('05-'08), Mazda LF9G-11-500 ('09), Quartermaster 505307, or Cosworth 20001019 flywheels may be used.~~ *Flywheel bolts are free.*

i. Intake restrictor: 1.205 inch diameter restrictor plate per intake port. ~~The restrictor plates must be obtained from Quicksilver RacEngines or Elite Engines. The restrictor plates must not be modified in any way.~~

j. *Exhaust system and manifold are unrestricted, within SCCA safety regulations.* ~~The exhaust system manifold tubing inside dimension must be 1.625 inches, and the manifold tubes must be a minimum of 24 inches in length, terminating into a single exhaust pipe through a 4-into-1 collector. The collector angles must be 15 degrees (30 degree included angle), with an exit diameter of 2.250 inches. The tail pipe must be a minimum of 24 inches in length. The tail pipe includes a muffler, if present, as long as the inlet and outlet pipes of the muffler are the same diameter as the tail pipe. 4-into-2-into-1 exhaust collectors and reduced diameter venturi sections are prohibited.~~

Grand Touring
GT
1. #8749 (GT Committee) GTAC-GTLite Rule Change Proposal
The CRB recommends the following changes to the GTL Mini Cooper to improve the straight line speed performance. Add to the Notes on the GTL Cars - BLMI, Mini Cooper: *Full flat bottom floors are permitted. Rear valance panel may be removed or modified. Rain gutters may be modified.*

The CRB recommends the following in an effort to provide additional flexibility for participants running SIR engines: Add 9.1.2.F.4.k:

k. GTLite Rules Concerning Alternate Weights and SIRs
1. Allow currently restricted 2V and 3V engines <1400ccs to run unrestricted at a 100 lb weight penalty.
2. Allow all 2V and 3V restricted engines less than 1600ccs to run 1mm larger SIR as an option at a 125 lb weight penalty.
3. Allow all 4V restricted engines less than 1600ccs to run 1mm larger SIR as an option at a 175 lb weight penalty.

4. Competitors running the alternate SIR must display "+1mm" on the side of their car next to their new weight.
5. Competitors running the unrestricted option must display "UNR" on the side of their car next to their new weight.
6. Limit compression ratio to 15:1 for SIR restricted engines effective 1/1/2014.

GT1
1. #8716 (Bill Rozmajzl) Allow aluminum V6 engine blocks.
Thank you for your request. Change 9.1.2.D.1.e.3: V-6 and V-8 General Motors engines are permitted: Buick, Chevrolet, Oldsmobile, Pontiac, *aluminum V-6 GM bow tie block,* Brodix, Brownfield, Dart, Edlebrock, Pro Action 14-degree, or Airflow Research 210, 215, 220, and 227 cylinder heads of cast iron or aluminum. All Pro cylinder head, part # 270-LM-13 is permitted Any cylinder head(s) utilized shall be of a conventional design (siamesed intake ports, two (2) valves per cylinder, all valves inline), direct replacement type. General Motors SB-2 cylinder heads are permitted.

Improved Touring
None.

Super Touring
None.

Production
None.

American Sedan
1. #8955 (Ted Warning) Proposed 2013 American Sedan Rules Feedback
Thank you for your request. In 9.3.55, change: 9.3.55. WINDSHIELD CLIPS/REAR WINDOW STRAPS
Windshield safety clips and rear window safety straps shall be installed on
all closed cars (except *American Sedan,* Showroom Stock, Spec Miata, Touring, Improved
Touring, and Super Touring).

This will remove the requirement for window clips and straps for all American Sedan cars, as the CRB believes they are not effective for American Sedan. Should this rule be approved by the Board of Directors, the proposed ruleset for American Sedan for 2013 will be adjusted to remove the reference.

Thank you for your vote on the wheel size "What Do You Think." Your vote will be retained with others until the CRB determines whether or not to adjust the base wheel size.

Spec Miata
None.

Touring/SS
None.

WHAT DO YOU THINK?
Formula/Sports Racer
FM
1. #9155 (Club Racing Board) Future of FM Engines
The CRB requests input, from FM drivers, owners and builders, on the issue of FM Spec engines.

1. Should FM remain a sealed, spec engine class.
2. If so, should alternate engine builders be included as official suppliers of spec engines?
3. If FM should not remain a sealed engine class, what engine specifications would the class embrace for the future?

MEMBER ADVISORIES
Improved Touring
IT
1. #8729 (IT Committee) Revise IT Operations Manual
The Improved Touring Advisory Committee is revising their Operations Manual. The process by which IT cars are assessed weights has been a great tool for the ITAC, CRB, and membership. The ITAC is making the following changes to that process known.

In Section 2, Published Horsepower: Strike the second paragraph and change the third as follows:

~~Specifically, all cars should be assumed to gain 25% above stock horsepower in IT trim, except that multivalve engines in ITB and ITC should be assumed to gain 30%.~~

If nothing is actually known about this engine when built to the limit of the IT rules, ~~but yet,~~ *a 25% default gain is recommended. Multivalve engines in ITB and ITC should be considered carefully to ensure they do not exceed the performance potential of the class, and a 30% default adder is suggested for these engines in the absence of data. If* the ITAC believes that the ~~25% or 30%~~ default number is in error, then one ITAC member should present a case as to what the correct "power multiplier" should be, and then the remaining ITAC members should each register a "confidence vote" in that number. If collectively the ITAC believes with 75% confidence that the alternate number is likely to be more accurate, then that number can be used. Note that if conclusive dyno results are being considered, then the "known horsepower" method should be used, and not the "published horsepower" method. *Non-standard gain numbers can also be used to adjust the weight of a classified car using the same method described above and data collected from cars built to the IT rules.*

The current IT "Operations Manual" is available as a PDF for download by members logging in to scca.com and navigating to Resources, File Cabinet. The file is titled "Advisory Committee Addendum - IT Process" under Club Racing.

NOT APPROVED BY THE CRB

GCR

1. #8809 (Eric Heinrich) Intentional Disabling of Transponder During a Timed Session

Thank you for your request; however, the CRB does not believe there is a proven need.

2. #8908 (Terry Hanushek) Qualifying Races for National Events

Thank you for your request. At the present time, the CRB has no plans to change this rule.

3. #8921 (Terry Hanushek) Double National Criteria Proposal

Thank you for your request. At the present time, the CRB has no plans to change this rule.

4. #9000 (Tom Himes) Change course configuration for the RO's at RA
Thank you for your request.

Formula/Sports Racer
FS
1. #8578 (Jon Staudacher) Reduce FS Weight to Re-homologate #S-12, DSR to FS
Thank you for your request. The minimum weight is not subject to exemption since ballast may be added to achieve the minimum.

FF
1. #3793 (Club Racing Board) Use of Term "Cockpit"
Thank you for your request. The definition of cockpit in the Glossary is adequate as written.

Improved Touring
ITS
1. #9067 (Fred Brett) Allow Alternate Upper Control Arms for 99-00 Civic
Thank you for your request. Alternate control arms are not within the IT philosophy. Please consider using commonly available offset bushings which are IT compliant.

2. #9068 (Fred Brett) Reduce Weight of 99-00 Honda Civic by 60 lbs
Thank you for your request. The car's weight is correct as classified and does have the low torque deduction of 50 lbs implemented in the published weight.

ITA
1. #8250 (Bowie Gray) Add 100lbs to the 1.6 Miatas
Thank you for your input request. The CRB will continue to monitor the car's performance before deciding to make any weight changes.

IT
1. #3682 (Josh Sirota) Consider Reducing Weight of E46 325i
Thank you for your request. The CRB has no plans to make weight changes for this car at this point.

Super Touring
None.

Production
None.

American Sedan
None.

Spec Miata
None.

Touring/Showroom Stock
T3
1. #8859 (Chad Gilsinger) Remove Restrictor from Honda S2000
Thank you for your input. The car is competitive as classed. The CRB will continue to monitor the performance.

PREVIOUSLY ADDRESSED
None.

NO ACTION REQUIRED
GCR
1. #8443 (Adam Miller) Participation Requirements for Officials
Thank you for your thoughtful letter. The GCR language is adequate as written. The CRB suggest that when considering applications from members who have multiple specialty licenses, Regional and Divisional Administrators discuss the upgrade and renewal process with the applicant. The Divisional Administrators are appointed by the Division's Executive Steward, who would be the person to develop a resolution to any such issue.
Formula/Sports Racer
FB
1. #7859 (Robert Laverty) Feedback for Restrictors in FB
Thank you for your feedback. Your comments are being considered by the CRB and the FSR Advisory Committee.

2. #8090 (S. Jay Novak) engine HP of FB race cars
Thank you for your feedback. Your comments are being considered by the CRB and the FSR Advisory Committee.

3. #8109 (Dave Gomberg) Response to #7130 WDYT Engine Restrictions
Thank you for your feedback. Your comments are being considered by the CRB and the FSR Advisory Committee.

4. #8122 (James Michael) FB Engine Restriction
Thank you for your feedback. Your comments are being considered by the CRB and the FSR Advisory Committee.

5. #8137 (Terry Biner) No Engine Restrictors!
Thank you for your feedback. Your comments are being considered by the CRB and the FSR Advisory Committee.

6. #8140 (William Wald) HP Restrictions to 175 HP
Thank you for your feedback. Your comments are being considered by the CRB and the FSR Advisory Committee.

7. #8142 (Keith Roberts) Engine Restrictor Input
Thank you for your feedback. Your comments are being considered by the CRB and the FSR Advisory Committee.

8. #8160 (JEREMY HILL) FB INLET RESTRICTORS
Thank you for your feedback. Your comments are being considered by the CRB and the FSR Advisory Committee.

9. #8286 (William Wald) FB Horsepower Restrictors
Thank you for your feedback. Your comments are being considered by the CRB and the FSR Advisory Committee.

FC
1. #8087 (Steve Demeter) Restricted Regionals
Thank you for your input. You are encouraged to contact your Region's leadership regarding any concerns with restricted regionals in your Region.

FM
1. #8274 (Mike Williams) Spec Motor Builder
Thank you for your letter. The CRB is looking into the future of the FM spec engine, and will be requesting member input.

Grand Touring
GTL
1. #8817 (Bryan Floyd) Input to Proposed Changes to GTL
Thank you for your letter. Please see letter #8749.

2. #8840 (Steve Sargis) 2.5% Weight Increase for Independent Suspension
Thank you for asking for clarification. The intent is that the weight penalty applies to all RWD cars running IRS by choice or OEM design.

3. #8926 (Joe Harlan) Member Input on Fastrack
Thank you for your letter. Please see letter #8749.

4. #8927 (Chaney Les) Against the Spec GTL Engine/Car program
Thank you for your letter. Please see letter #8749.

5. #8933 (Isaac Preston) GTL What Do You Think?
Thank you for your letter. Please see letter #8749.

6. #8934 (Don Kadunc) Spec Engine, Mazda
Thank you for your letter. Please see letter #8749.

7. #8935 (Charles Leonard) Member Input Request #8749 GTLite Rule Change
Thank you for your letter. Please see letter #8749.

8. #8954 (Tom Sterrett) Approve Letter #8749
Thank you for your letter. Please see letter #8749.

9. #8974 (G. M. Higgs) Response to the 8749 Section of the Fastrack News
Thank you for your letter. Please see letter #8749.

10. #8983 (Van McDonald) #8749 GTLite Rule Change Proposal
Thank you for your letter. Please see letter #8749.

Improved Touring
ITA
1. #8281 (Robert Luke) Mid Year Spec Change
Thank you for your input. The CRB can implement weight changes throughout the year to make performance adjustments for all classes, both National and Regional.

IT
1. #6292 (Travis Nordwald) Create IT"U" class
Thank you for your input.

Super Touring
STU
1. #8938 (Steven Simpson) Allow Modification and Use of Non-OEM Steering Shaft
Thank you for your request. Please review GCR 9.1.4.N for information about steering components.

ST
1. #8939 (Steven Simpson) Allow Modification to Facilitate Mounting Pedal Box, Remote Res
Thank you for your request. Please review GCR 9.1.4.2.G for information about master cylinders and pedals.

Production
FP
1. #8994 (Harold Flescher) Balance LP Big Motor Torque With Full Prep Small Motor HP
Thank you for your perspective on this issue.

American Sedan
1. #8850 (Kevin Smith) Reinstate the Maximum Tolerance for GM Deck.
Thank you for catching this. In Proposed Rules located at: http://scca.cdn.racersites.com/prod/assets/Proposed2013ASRules.pdf, re-instate the maximum deck height, 9.1.6.F, GM ~~9.0070~~ *8.9970"* - 9.0430"

Spec Miata

None.

Touring/Showroom Stock
T1
1. #9029 (John Buttermore) Remove Weight Penalty for 4 Piston Brakes
Thank you for your input. This will be taken into consideration for the 2013 class realignment.

RESUMES

None.

CLUB RACING TECHNICAL BULLETIN

DATE: September 20, 2012
NUMBER: TB 12-10
FROM: Club Racing Board
TO: Competitors, Stewards, and Scrutineers
SUBJECT: Errors and Omissions, Competition Adjustments, Clarifications, and Classifications

All changes are effective 10/1/2012 unless otherwise noted.

GCR
1. #9006 (Terry Ozment) Accept Grand Am licenses in Regional Races
In GCR section 3.1.5.C, add a new section as follows:
20. Grand American Road Racing Association (Grand-Am)

2. #9007 (Greg Amy) Fuel Filler Trap Door, Stock Tanks
In GCR section 9.3.27, add a new section as follows:
"5.On vehicles where a stock fuel tank is allowed, the unleaded fuel filler trap door and restrictor plate in the filler neck may be removed."
In SMCS 9.1.8.C.I.1 and SMX5CS 9.1.11.B.15.a, remove the following language:
~~The unleaded fuel filler trap door and restrictor plate in the filler neck may be removed.~~

3. #9009 (jim wheeler) 9.3.32 clarification
In GCR section 9.3.32, clarify as follows:
"Exposed glass headlights shall be taped. Rear brake lights may be taped with transparent tape. Turn signals, front parking lights, backup lamps, and side marker lights may be taped or painted. Lights mounted on or below the bumper shall be removed, and all resulting holes shall be covered to prevent air passage through said holes. *Lights mounted within the bumper may be removed or covered and any resulting holes shall be covered to prevent air passage through said holes.*"

4. #9024 (SCCA Staff) Correct omission 9.4.5.E.10
In GCR section 9.4.5.E.10, clarify as follows:
"Single seat cars may compete with an approved MSA (Motor Sports Association UK) National Single Seater Roll Structure Certificate. All related engineering drawings and documents shall be submitted to SCCA Technical Services with the homologation request*. SCCA homologation will only be approved for designs that incorporate a main hoop having a minimum tubing size of 34mm x 2mm wall thickness."*

Formula/Sports Racer
FF
1. #8244 (Lee Niffenegger) Update parts application for Honda Fit Engine
In GCR section 9.1.1.D.3.b, make the following updates:

b. Block
1. The only permitted cylinder ~~block~~ ***blocks*** are Honda PNs:
11000-RP3-810 ***(2009-2010)***
11000-RTW-810 (2010-2012)

In GCR section 9.1.1.D.3.f, make the follwoing updates:

f. Cylinder Head
1. The only permitted heads are Honda PN:
12200-RB0-G00 ***(2009-2010)*** (US spec)
12200-RP3-A00 (2011-2012) (US spec)
~~and~~
12200-RB0-000 (Japan Spec).

Grand Touring
GT2
1. #8915 (SCCA Staff) Clarify the 20B porting allowance.
In GT2, Mazda engines, 20B, clarify the porting by adding the following:

Engine Family	Engine Type	Bore x Stroke (mm)	Disp. (cc)	Head Type	Valves / Cyl.	Fuel Induction	Weight (lbs)	Notes
20B		*Street / Bridge / Peripheral Port*	3924			40mm SIR	2230	

Improved Touring
ITR
1. #8270 (Christopher Childs) Update Specline
In ITR, Ford Mustang (05-06), add the 2007 model year.

Production
HP
1. #8885 (Matt Brannon) Reduce weight of L2 Fiat X19 (1300 and 1500)
In HP, Fiat X-1/9 1300 Level 2, change the weights as follows:
~~1725 *1768 **1811~~ *1695 *1737 **1780*
In HP, Fiat X-1/9 and Bertone 1500, change the weights as follows:
~~1900 *1948 *1995~~ *1840 *1886 **1932*

2. #9132 (Prod Committee) Spitfire track specs
In HP, Triumph Spitfire Mk. I & Mk. II, change the track as follows:
~~52.6/51.5~~ *53.0/51.9*

Super Touring
STO
1. #8932 (Cheyne Daggett) Classify
In STO, Ford 4.0L V6, change the spec line as follows:
Ford ~~4.0L~~ V6

2. #9013 (SCCA Staff) Check STO spec Line: Chevrolet 5733cc 2950 lbs
In section 9.1.4.1.J, change the GM 5733cc engine notes as follows:
5733 2950 GM V-8 engines with OEM specs 4.00" bore x ~~3.75"~~ *3.48"* stroke; e.g., LT1, LT4, L98, etc.

ST
1. #8937 (steven simpson) add EPS to available steering options
In section 9.1.4.N.12.d, clarify as follows:
d. An OEM electric-assisted steering ~~rack~~ *system* may be used.

American Sedan
None.

Spec Miata
None.

Touring/Showroom Stock
1. #8905 (david mead) Clarify the existing brake duct rule.
In section 9.1.10.D.6.a.5, clarify as follows:
5. Any brake ducts are permitted, but they must serve no other purpose ~~and must mount without modification to any components, except for the creation of duct intake openings~~. *Fender liners may be modified solely for routing and attachment of brake ducts.* Duct intake openings may only be created by the removal of an auxiliary or fog light assemblies. A total of 2 light assemblies may be removed. The stock headlamp location is not permitted for brake ducting. If car is not equipped with an auxiliary or fog light assemblies, 2 alternative duct openings may be created by the removal of 2 sections up to 14.5 square inches of stock false grills originally located in the front fascia. No part of the fascia may be modified. The ducting must not be visible from outside the car.

T2
1. #8844 (SCCA Staff) Clarify T2 & T3 Mustang rear spring relocation is permitted.
In T2, Ford Mustang GT 5.0L (11-12), clarify the notes as follows:
"17626-AA, GT/CS Rear Fascia #AR3Z-17F828-AA, Ford Accessories Spoiler #AR3Z-6344210-CA, 14" Brembo Brake Kit #M-2300-S, Rear Axle Cover #M-4033-K, Spring Kit #M-5300-A (M-5310-A front, M-5560-A rear *(rear spring relocation to shock permitted with use of this kit)*), Strut Tower Brace #M-20201-S197, Swaybar Kit #M-5490-A, Jounce Bumper Kit # M-5570-A, Panhard Bar #M-4264-A, Rear Lower Control Arms #M-5649-R1, Rear Upper Shock Mount #M-18197-A. 57mm flat plate restrictor required. Ford Racing oil pan #M-6675-M50BR permitted. Driveshaft from The Driveshaft Shop part number FDSH22-

A-CV1 is allowed."

In T3, Ford Mustang V6 (11-12), clarify the notes as follows:

"The following parts are allowed: Ford Accessories Spoiler #AR3Z-6344210-CA Rear Axle Cover #M-4033-K, Spring Kit #M-5300-A *(M-5310-A front, M-5560-A rear (rear spring relocation to shock permitted with use of this kit)*), Strut Tower Brace #M-20201-S197, Swaybar Kit #M-5490, Jounce Bumper Kit # M-5570-A, Panhard Bar #M-4264-A, Rear Lower Control Arms #M-649-R1, Rear Upper Sho18197-A. The Driveshaft Shop part number FDSH18-A is allowed."

CLUB RACING COURT OF APPEALS

Judgment of the Court of Appeals
Selin M. Rollan vs. SOM COA Ref. No 12-11-SE
August 30, 2012

FACTS IN BRIEF
On August 12, 2012, following the Central Florida Region Double SARRC Regional Race for Group 1 (Race 7) at Daytona International Speedway, Thomas Burt (SM #00) protested Selin Rollan (SM #87) for violating 2012 GCR Section 6.11.1. Mr. Burt alleged that Mr. Rollan did not allow racing room and forced his car off the track and into a guard rail at the exit of Turn 6 (identified in subsequent documents as Turn 5). The Stewards of the Meeting (SOM) Richard Babcock, Doug Puckett, Norm Esau, Martyn Eastwood, Sandy Jung, Pax Lemmon, and William Merrill, Chair, heard evidence and reviewed witness statements from Mr. Burt, Mr. Rollan, and two crew members. The SOM upheld Mr. Burt's protest and placed Mr. Rollan probation for three (3) race weekends, disqualified him from the Group 1 race (adding four (4) penalty points to his competition license) , and voids any points he earned from the race.

Mr. Rollan appealed the decision of the SOM.

DATES OF THE COURT
The SCCA Court of Appeals (COA) Rick Mitchell, Jeffrey Niess and Michael West, Chairman, met on August 23 and August 30, 2012 to review, hear and render a decision on the appeal.

DOCUMENTS AND OTHER EVIDENCE RECEIVED AND REVIEWED

1. Letter of Appeal from Selin Rollan including an additional witness statement from Jamie Tucker (SM # 97) and an in-car video from Mr. Tucker's car, received August 14, 2012.
2. Official Observer's Report and related documents, received August 21, 2012.

FINDINGS
In his witness statement to the SOM, Mr. Burt stated that Mr. Rollan "hit my back right tire extremely hard and continued to push my car until I lost control. I was forced off the track into the outside wall." Two additional witness statements, reviewed by the SOM, supported Mr. Burt's testimony that he was "pushed" off the track by Mr. Rollan at the exit of Turn 5.

In his appeal, Mr. Rollan asserts that as he reached the apex of Turn 5, he was "essentially door-to-door" in his attempt to pass Mr. Burt. He reports that the only contact between his car and Mr. Burt's car was a "slight touch at the rear fenders." Mr. Burt contends he left "sufficient racing room" at the apex of Turn 5 for both cars to have made the corner without incident. In support of his assertions, Mr. Rollan submitted with his appeal two new pieces of evidence not available to the SOM: a witness statement from Jamie Tucker, driver of SM #97, and an in-car video from Mr. Tucker's car.

In the video clip, which begins prior to Turn 4 and ends well past Turn 5, Mr. Rollan (car #87) is behind Mr. Burt (car #00) as both cars enter the right-hand Turn 5. Mr. Burt remains on driver's left and Mr. Rollan moves to driver's right establishing a side-by-side position with Mr. Burt as both cars continue into the turn. Mr. Burt then moves right, toward the apex, where Mr. Rollan is already positioned holding a steady line into the apex of Turn 5. Both drivers appear to realize they are converging at which point Mr. Burt turns slightly left and Mr. Rollan turns slightly right. There appears to be very light contact at the rear wheels when both drivers react. After the apex, Mr. Burt trails off the track on driver's left and Mr. Rollan remains on driver's right on the track and is never near the right side of Mr. Burt's car again.

The video evidence clearly shows that Mr. Rollan made a clean and controlled entry into the turn, that Mr. Rollan maintained a consistent line on driver's right through the turn, and that Mr. Burt moved from driver's left to driver's right as he sought to take the turn. The rear fender- to-fender contact was an incidental result of both drivers attempting to avoid contact and was unavoidable. Mr. Rollan did not push Mr. Burt off the track.

The COA recognizes the SOM made a decision based on the evidence presented at their hearing and their decision was proper given what they knew at that time.

DECISION
The Court of Appeals overturns the decision of the SOM in its entirety. Mr. Rollan's original finishing position is restored, his championship points are restored, the three race probation penalty is vacated, and points added to Mr. Rollan's competition license are removed. Mr. Rollan's competition license shall be returned to him.

Mr. Rollan's appeal is well founded and his appeal fee, less administrative costs retained by SCCA, will be returned.

TIME TRIALS ADMINISTRATIVE COUNCIL

TTAC Minutes | September 12, 2012

The Time Trials Administrative Council met via conference call on 9/12/2012 at 7:30 PM CST.
The following members participated:

TTAC Chairman / CENDIV	Tony Machi
SWDIV	Kent Carter
GLDIV	Jerry Cabe
SOPAC	Roy Mallory
SEDIV	Craig Farr
RMDIV	Dan Goodman
MIDDIV	Chuck DeProw
BOD Liaison	Brian McCarthy,

Also participating Deanna Flannigan of the National staff.

Reports

- Approval of Minutes (AUGUST, 2012)(TONY MACHI)
- Report from the Safety Committee (Jerry Cabe)
- BOD director report- (Brian McCarthy)
- Chairman's comments (Tony Machi)

Old Business

- Operations Manual (Dave Deborde) No discussion manual due to Dave Deborde being unable to attend call
- Strategic Plan The Council will continue to review it. Will have a finalized plan for the BOD prior to the convention. Key points are aimed at Maintaining the program and growth.
- Rule changes for 2013

  Clothing long sleeve shirts and cotton material discussed – Motion (Matt Rowe, Kent Carter second) to remove rules on clothing from TTR for Level 1-PDX and Level 1-Club Trials events. Motion passed 4-3. The specific change would be in effect with the 2013 rules. It is noted that a region may require long sleeves, etc. if they desire in their event's supplementary regulations. (Chicago Region, George Laws #8849)

  Emergency vehicles requirements discussed. The TTR requires a BLS ambulance on site. Need to review/include information regarding safety equipment and response vehicle and or ambulance requirements

  Roll bar construction and " pop-up" type factory roll-over protection in Level 1-PDX andLevel 2-Club Trials events are under review. Member input is requested. The Safety committee to continue to look at this issue.

  The level of car prep that would be allowed in Level 1-PDX and Level 2-Club Trials events was discussed. The council sees that there are a lot of vehicles that might be OK to participate, but the TTR does not specifically allow them (ie: vintage prepped production cars). While Level 1- PDX is designed to be driver training there are a number older racecars than might be appropriate for these events. Member input is requested.

- Sub-committee assignments

  Secretary – Roy Mallory???
  Safety Committee – Jerry and Chuck Deprow will rotate as liaison
  Operations Manual – Dave Deborde
  Rules - Jerry Cabe and Matt Rowe
  Officials and Licenses – Craig Farr and Dave Deborde

- List of barriers in our respective divisions to growing our programs

  A number idea about some of the barriers to growth were submitted to Brian McCarthy. Some of them were branding of Level 1-PDX and Level 2-Club Trials as they compare to Level 3 and 4 events. SCCA web site not friendly to Time Trials in the "What can I do with my car" options. Another is the price disadvantage that we face from race track run programs.

New Business:

- NEDIV Safety Committee Rep. (Matt Rowe) He submitted the name of Jen DeHart to be the safety committee representative.

- Convention:
    a. Nominations for awards. The Council is seeking nominations for the Time Trials event of the year and the Rick Shafer participant of the year.

Submitted by Chairmen Tony Machi

Meeting adjourned at 8:55 PM CDT

SOLO EVENTS BOARD

SOLO EVENTS BOARD | August 22, 2012

The Solo Events Board met by conference call August 22nd. Attending were SEB members Dave Feighner, Bryan Nemy, Steve Hudson, Mike Simanyi, Erik Strelnieks, Richard Holden, and Dave Hardy; John Walsh and Brian McCarthy of the BOD; Doug Gill of the National Staff. These minutes are presented in topical order rather than the order discussed.

Unless noted otherwise the effective date for all rule, class, and listing change proposals herein is 1/1/*2014*

Comments regarding items published herein should be directed via the website www.sebscca.com.

GENERAL

- The SEB will have at least one vacancy at the end of 2012. Interested members are invited to submit their qualifications in writing via www.sebscca.com.
- Nominations are needed for the Rookie of the Year and Driver of the Year awards. Descriptions of these awards and lists of past winners are found in the Solo Rules in Appendix V.

STOCK

- Vacancies exist on the Stock Advisory Committee (SAC), and the SEB encourages interested Club members to submit their qualifications in writing via www.sebscca.com.
- The following class change proposals have been submitted by the SAC and are provided here for member review and comment (#8966):
  - Move from FS to *DS*: Lexus SC400 (1992-2000)
  - Move from FS to *GS*: Lexus SC300 (1992-2000)

STREET TOURING

- The SEB has approved the addition of David Whitener (#6094) and Matt Murphy (#6108) to the STAC.
- The STAC and SEB have reviewed the following items, and thank these members for their input:
  - #6100, 6127, 8868; STAC positions. Thank you for the interest in serving on this committee. The vacant positions have been filled.

STREET PREPARED

- The SPAC and SEB have reviewed the following items, and thank these members for their input:
  - #8342, 8343, 8344, 8345, 8346, 8348, 8349, 8351, 8352, 8353, 8354, 8362, 8364, 8365, 8369, 8371, 8373, 8377, 8378, 8379, 8380, 8384, 8386, 8395, 8396, 8400, 8405, 8406, 8408, 8410, 8424, 8429, 8434, 8435, 8436, 8438, 8439, 8440, 8442, 8444, 8445, 8447, 8455, 8460, 8462, 8465, 8481, 8483, 8486, 8490, 8525, 8550, 8551, 8627, 8715, 8727, 8750; SP aero comments

STREET MODIFIED

- Vacancies exist on the Street Modified Advisory Committee (SMAC), and the SEB encourages interested Club members to submit their qualifications in writing via www.sebscca.com.
- The SEB is recommending to the BOD (see below) that SMF become a full National class as of 1/1/2013.

PREPARED

- Vacancies exist on the Prepared Advisory Committee (PAC), and the SEB encourages interested Club members to submit their qualifications in writing via www.sebscca.com.

KART

- The following proposal has been provided by the KAC and is published here for member review and comment:
  - Change 19.1.A.4 to read as follows:

    "4. Minimum weight for entrants in 125cc shifter karts is 385 lbs as raced, including driver, regardless of driver gender or class entered. Weights for entrants with karts having other engines are as listed in Section 19.1.D.3. *Minimum weight for ladies class is 20lbs less than the corresponding open class."* (#7842)

NOT RECOMMENDED

Stock

- #8973, Mini Countryman AWD classing. Per the SAC, the Mini Countryman does not have a published SSF and its height is more than its average track width, therefore it does not meet the current minimum rollover safety requirements for Solo competition.

TECH BULLETINS

Stock

1. The following is a clarification to a previously-published new listing:

   Fiat 500 Abarth (*2012*-2013) GS (#8931)

2. The listing clarification has been recommended by the SAC and approved by the SEB:

   In class F Stock under Lexus, change "400" to "*SC400 (1992-2000)*" (#8966)

Street Touring

3. While the Fiat 500 (non-Abarth) is not allowed to run in Stock category due to failure to meet rollover requirements, the car may be run in STF if it meets the height/track requirements of 3.1. (#8634)

4. Aftermarket T-bar clamps in the induction system are considered higher performance than OE parts and are therefore not allowed by 13.0. NOTE: The additional clamping force may serve to withstand the higher boost pressures which can be developed through Street Touring allowances. (#8673)

5. The following new listings, effective immediately upon publication, have been recommended by the STAC and approved by the SEB:

Scion iQ CVT	STF (#7831)
Saturn Astra	STF (#8682)
Fiat 500 Abarth	STC (#8862)
Lexus SC 300	STC (#8967)
Subaru BRZ / Scion FR-S	STX (#7582, 7596)

Street Prepared

6. The following new listings, effective immediately upon publication, have been recommended by the SPAC and approved by the SEB:

   Mercedes SLK55 (2004-2011) (R171 chassis) ASP

7. Errors and Omissions: The following is a correction to a previously-published Tech Bulletin (#8167, 8879): Per the SPAC, 15.1.E contains no requirement that anything be used to replace the a/c *evaporator*, so anything could be used to route ducting to the heater provided it serves no other purpose. This could be considered a comfort and convenience item. (#9052)

Street Modified

8. Change Appendix A, Class SMF, items under Minimum Weight Calculations to read:

   2-seater: 1810 lbs + 125 lbs per liter
   4-seater: 1750 lbs + 125 lbs per liter
   Turbocharged or supercharged versions of all SMF engines will be classified on a basis of adding 1.0L to the actual displacement.

RECOMMENDED TO THE BOD

The following previously-published items have been recommended to the BOD with an effective date of 1/1/2013. Items are shown grouped by category and by month of Fastrack publication.

GENERAL

April

- Replace 1.3.2.K with the following (adapted from the GCR):

  1. No driver may consume alcohol until they have completed all their runs and completed their work assignment for the day. No official may consume alcohol until his duties have been completed for the day. Alcohol may not be consumed in the grid until after all the day's competition activities are concluded. Violators may be penalized

as provided in Section 9.

Nothing in this section shall override site-specific alcohol restrictions.

2. The use at an event by any participant of any federal Schedule 1 controlled substance (including marijuana), or other drugs that affect the ability of the participant to safely participate in the event or may otherwise adversely affect the safety or integrity of the event, is specifically prohibited. Any participant who violates this prohibition

• shall not seek to participate in the event

• may be excluded from the event by the event chairman

• may be removed from the grounds by the order of the event chairman or chief steward

• may be penalized as provided in Section 9.

As a condition of continued participation, the participant may be required to submit to such testing procedures as may be established by SCCA in its sole discretion. Failure or refusal to submit to such testing shall be deemed a violation of the above prohibitions. However, SCCA assumes no obligation or duty to establish such testing procedures and/or to test participants on a random basis or in a specific case.

- Delete Section 4.9 in its entirety.

  Comment: The SEB believes it can effectively serve the needs of the program by monitoring the class structures and participation levels, and dealing with issues on a case-by-case basis as they arise.

- Revise Appendix I to read as follows:

  Sound Measurement at SCCA National Solo Events

  The maximum limit will be 100 dBA.

  The measurement will be taken at a point where the vehicle can reasonably be expected to be under load at full throttle. The measuring point will be 50 feet from the edge of the course using an ANSI Type 2 sound meter set to "A" weighting, "Slow" response. The microphone will be 3 to 4 feet above ground level, positioned perpendicular to vehicle direction of travel. The microphone will be away from structures (e.g., buildings, etc.) as is practical.

  If a vehicle exceeds 97 dBA, the Chief Steward or his/her designated representative will be notified by the Sound Control Steward or representative. The Chief Steward or representative will notify the driver of any measurement over 97 dBA.

  If a vehicle exceeds 100dBA, the driver will be allowed an attempt to reduce the sound level of the vehicle before his/her next scheduled run that day. (A "mechanical delay" per Solo Rules 6.8.D may be used.) If a viable remedy has been attempted in the judgment of the Chief Steward or representative, the driver will be allowed a "second chance" for the next scheduled run. If the driver declines any "repair action" or the "repair" is deemed inadequate by the Chief Steward or representative, the driver will forfeit all subsequent runs in the vehicle (unless an adequate "repair action" is completed before the next scheduled run). If the vehicle exceeds 100 dBA again on the "second chance" run, the driver will be allowed another attempt as before to reduce the sound level. The Chief Steward or representative may approve a final "third chance" run after another remedy to reduce the sound level. If the limit is exceeded on the "third chance" run, the run will be scored a DNF.

  Any "repair actions" to reduce the sound level of a vehicle may not be removed (including the next day of the event) and may be subject to re-inspection by the Chief Steward or representative. If the "repair" has deteriorated after passing the sound level requirements at the measuring point, it must be addressed again. The Chief Steward or representative has the right to disallow a repeat of the "repair action" that deteriorated. The "repair action" may be changed or modified to improve the quality of the "repair" and/or further reduce the vehicle sound level. Drivers that receive a DNF for non-compliant sound limits must make further "repair actions" to reduce the sound level to compliant readings before starting runs the next day.

  These general sound limit regulations WILL NOT override specific local area and/or SCCA Regional sound limit requirements, regulations, and/or penalties.

May

- Change the second sentence of 4.1.A to read as follows:

  Any underage driver who has the legal authority (license or permit) to operate an automobile with restrictions on a public road may compete at Solo events, as long as the restrictions of the driving license or permit are met, and the event allows a passenger.

  Also add to the end of 4.1.A as follows:

  The provisions of 4.1.D provide event officials discretion with regard to the entry of any driver.

- Change the first three sentences of 8.4 to read as follows:

  The protest *should* be decided on the day of the event by a PC of at least three members, within a reasonable time following completion of the event. If the protest cannot be decided on the day of the event, the PC must resolve it within *10 calendar days unless agreed to by the parties*. The delayed protest decision will be *forwarded to* both parties of the protest in *a mutually agreed upon method of either email or certified mail*.

  Also change the second sentence of 8.4.1 to read as follows:

  Members of the PC may also be drivers in the same event, but *at the National Championship* will not perform any other duties than those of the PC.

November

- Replace the latter portions of Section 3.1, beginning with "Rollover Potential Guidelines" with the following:

  a. Rollover Potential Guidelines

  The SSC has reviewed the allowance of competing cars with higher roll centers and has prepared the following chart to be used as a guideline for assisting Regional members in determining whether a vehicle has a higher than average potential to roll over in Solo® competition. Vehicles falling into the acceptance range still have the probability to roll over but they are less likely to roll over than those that are not in the acceptable range are. This chart is for all vehicles specifically listed in Appendix A.

  An approach of this type is required to help event officials assess the rollover risk potential of vehicles which fall in a gray area between traditional Solo® cars and those which clearly have a "high center of gravity". While it is imperfect, it should strike a balance between risk reduction and admission of the most vehicles to Solo® while introducing a consistent procedure for doing so.

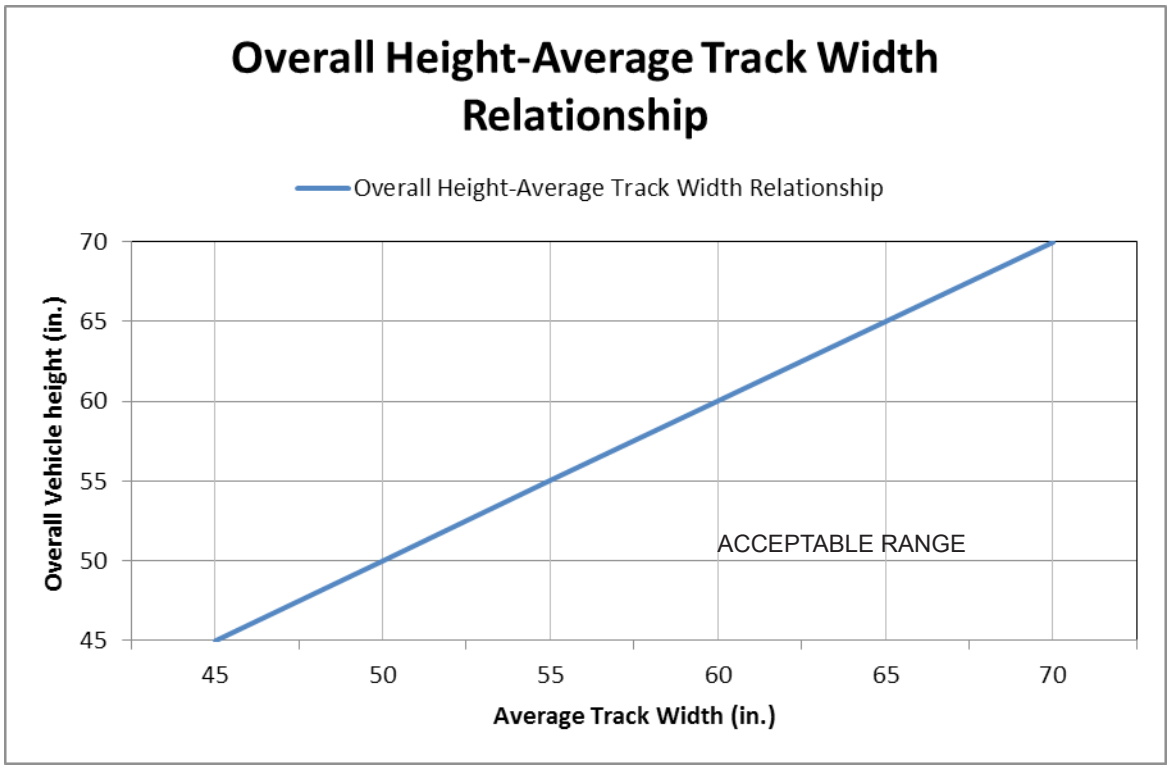

The measurements are to be taken from the ground to the tallest point of the vehicle for the Overall Vehicle Height and the normal track measurement as stated in Section 12.5 for the Average Track Width.

The SEB may use Static Stability Factor (SSF) for classing new vehicles. Static Stability Factor is defined as one half the track width divided by the height of the center of gravity above the road. Vehicles with an SSF of less than 1.30 should not be permitted to compete in our Solo® events due to their higher risk of roll over.

b. Physically disabled drivers may use alternate vehicle controls and preparation items appropriate for the nature of their disability. In the case of a driver using alternate controls, extra care should be taken to ensure that the driver does have adequate control of the vehicle and that the control mechanisms can stand up to competition use. A waiver from the SCCA® Technical Services Department is required for the use of such equipment in National Solo® events. Requests will be handled on a case-by-case basis.

STOCK

April

- Change the last sentence of 13.8.B to read:

  However, no suspension part may be modified for the purpose of adjustment unless such modification is specifically authorized by the factory shop manual.

Also remove from Appendix F, under STOCK CATEGORY CLARIFICATIONS, the item titled "PORSCHE STRUT ORIENTATION."

July

- Move from BS to FS: Chrysler Crossfire SRT-6 (2005-'06)
- Move from AS to FS: BMW M3 (E90/E92/E93 Chassis) (2008-2012)
- Move from BS to FS: BMW M3 (E46 Chassis) (2001-2006)
- Move from AS to FS: Mercedes C63 AMG (non-Black edition) (2008-2012)

- Move from AS to FS: Lexus IS-F (2008-2012)

STREET TOURING

February

- Replace 14.10.J with the following:

  Any engine or transmission mount is allowed provided it attaches only to the original mounting points, does not relocate the engine/transmission (other than incidental to changes in compliance material), and weighs no less than the OE mount. All components between the engine/transmission and the mounting structure are considered to be part of the mount assembly.

  Also remove 14.8.E and re-letter subsequent sections accordingly.

  Comment: The existing allowance attempts to retain bushing compliance through an ineffective restriction on metal content. Mounts of a solid nature can still be legally fashioned from hard plastic (e.g. Delrin). The proposed allowance replaces that ineffective restriction with one that instead limits weight reduction benefits.

May

- Modify 14.10.E as follows:

  1) Remove the words “high flow” from the first sentence.

  2) Add new sentence as follows:

  *Replacement converters must have a minimum catalyst density of 100 cells per inch and minimum substrate length of 3 inches***.**

  Comment: this more clearly defines what a catalytic converter is, and specifies a minimum level of functionality. It should have no effect on existing installations of legitimate automotive converters.

- Replace 14.10.A with the following

  Oil pans and pickups may be modified or substituted. Addition or modification of windage trays or crankshaft scrapers is not allowed.

  Comment: Based on member feedback, this expands on the previously published proposal allowing oil pickup relocation within the OE pan. It is intended to allow common bolt-on solutions to oil starvation issues caused by high cornering loads, while minimizing potential performance enhancements.

STREET PREPARED

September 2011

- Move to FSP from DSP:

  Honda
  Prelude (1983-1987)
  Prelude (1988-1991)

October 2011

- Move from CSP to DSP:

  Toyota
  Supra (1979-1981)

- Add to 15.9.F as follows:

  A hole may be drilled in the firewall to permit passage of electrical wiring. It should be no larger than

necessary and shall serve no other purpose.

- Change 15.10.AA to read as follows:

  AA. Camshafts and related parts must remain standard except that alternate cam drive pulleys or gears may be used to adjust cam timing if no variable cam and/or valve timing system exists as standard. ***Timing covers or valve covers may be altered for pulley clearance or access to adjustment.*** Type of cam drive (chain, belt, gear) must remain as standard. Alternate parts of the same general type (e.g. roller chain in place of "silent" chain) may be substituted. Mating parts (block, heads, covers, retainers, etc.) may not be altered *except as mentioned above*. Vehicles equipped with a variable cam and/or valve timing system as standard may use alternate computer calibration to adjust cam and/or valve timing but may not change or substitute cam drive components (hardware).

January

- Change Impreza listings in DSP to read as follows:

  Subaru
  Impreza *(1993-2001) (all)*
  Impreza 2.5 (*NOC)*

  Also remove from FSP:

  Subaru
  Impreza NOC

February

- Change 15.10.J to read as follows:

  Engine *and transmission* mounts may be replaced, but must attach in the factory location(s) without additional modification or changes. Engine position may not be changed. Hydraulic shock type rear engine locators, or bobble struts, may be replaced by manufacturer's performance part or aftermarket replacement part. This part must retain factory dimensions and attachment points, including factory design. (Example: If factory locator/bobble strut is gas or hydraulic piston type, replacement part must be gas or hydraulic piston type.) If one or more non-OE engine *or transmission* mounts are used, 15.10.K does not apply and a torque suppression device may not be used.

  Also delete 15.10.N

June

- Change the ESP listing for BMW 528 et.al. from:

  528, 530, & 533 (all)

  to

  528, 530, & 533 *(non-turbo)*

- Move from BSP to DSP:

  Mazda
  RX8

- Remove from 15.2.I the fourth sentence, which currently reads as follows:

  "The intent of this allowance is to accommodate commonly available appearance kits, and replicas thereof, which have no significant aerodynamic function at Solo speeds."

  Comment: This retains current aero allowances, and removes the 'intent' wording.

- Change 15.2.B to read as follows:

  Factory rub strips, emblems, mud flaps, *rear wings or rear spoilers* may be removed.

  Comment: This is a portion of the "Option 2" proposal, which is not being recommended in its entirety. Member input on both sides of the Option 2 discussion indicated support for this specific item. As most cars in SP have the option to remove wings via update/backdate, this change will not affect very may vehicles.

- Add new subsection 15.10.CC as follows:

  CC. Cruise control systems may be removed in whole or in part.

July

- Change the DSP and FSP listings for the affected BMW, Chevrolet, Ford, Mazda, Toyota, Volkswagen models shown to read as follows:

  In DSP:
  BMW
  318 (16v) & 325 (E30 chassis)

  In FSP :
  BMW
  318i (8v, E30 chassis)
  318i, 318is (E36 chassis)
  Chevrolet, Pontiac, Buick, Oldsmobile, Geo, & Suzuki
  Storm *(all)*
  Ford
  Focus (all) (1999-2007)
  Fiat *& Bertone*
  X1/9 (all)
  Mazda
  323 non-turbo *(1986-1989)*
  323, *Protege*, *MX-3 4 cyl. (1990-1994)*
  Protege *(1995-1998)*
  Toyota
  Corolla *FX16*
  Corolla GTS *(all) (1984-91)*
  Volkswagen
  Rabbit, Jetta, Scirocco, Cabriolet, & Pickup (*all*, A1 chassis) (1975-1992)
  Golf & Jetta (*all*, A2 chassis)
  Corrado (all)
  Golf & Jetta (VR6, A3 chassis)
  Golf & Jetta (VR6 NOC, A4 chassis)

August

- Add new subsection 15.2.A.1 as follows:

  Hardware may be added to the steering system outside the passenger compartment to limit steering travel, provided it does not alter steering or suspension geometry within the limited range of motion and serves no other purpose.

STREET MODIFIED

May

- Remove Section 16.3.

  Note: this section was provided when the SM category was first created, and is no longer viewed as specifically necessary since the category and its rules have matured.

July

- Replace 16.1.N with the following..

  T-Tops, targa tops, sunroofs, moon roofs, and similar roof-mounted panels may be removed/replaced with alternate panels provided that the area of interface is limited to the original perimeter of the t-top, sunroof, etc. or utilizes the OE panel mount points, and that the contour of ***any replacement panel surface*** does not vary from the contour of the part being replaced by more than 1 inch in any direction. The material used to construct the alternate panel and the method used to attach it to the interface is unrestricted. Any actuation mechanism and the associated wiring, if any, may be removed.

- Replace 16.1.I with the following:

  Front hoods (engine covers), engine covers, trunk lids and hatches not containing glass, front fenders, rear fenders not part of chassis structure (unibody), front & rear fascias, and side skirts may be modified or replaced, and may be attached with removable fasteners. Associated hardware including latches, hinges***, window washer system*** may be modified, removed or replaced.

November

- In Appendix A, under Street Modified, remove the word "Supplemental" from the Street Modified Class Front Wheel Drive section heading.

PREPARED

February

- Revise the 4th paragraph of Appendix A.1.c. for XP to read as follows:

  Wing endplate surface area is limited to 200 square inches each and the number of endplates is limited to a maximum of two. Convertibles/roadsters with no roof and targas with no rear window, no portion of the wing may be higher than 12 inches above the wing's point of attachment to the body of the vehicle. *In the event that a convertible/roadster with no roof or a targa with no rear window retains the original equipment windshield frame with a windshield of any material that meets 17.2.K.1, the top of the windshield frame shall be considered top of the roofline and the car may use the wing mounting rules in Appendix A.1.c for a closed car.*

  Comment: The intent of this proposal is to increase the allowable wing height for open cars with full windshields.

- Change the Appendix A listing for the Toyota Starlet in EP to read as follows:

  Starlet (non-turbo, 2WD) (1981-1984)

  Alt Engine: 4A-G (1.6L) with cyl. head P/N 11101-16010, or 11101-16030

  Comment: The proposed change eliminates a potential engine/cylinder head configuration that was not available in RWD Toyotas

April

- Add the following subsections to 17.2.P:

  3. All OE rear wings and rear spoilers may be removed.

  4. Vehicles equipped with an OE rear wing may add a rear spoiler only if the OE wing and wing attachments are first removed.

June

- Replace the fourth and fifth paragraphs under Prepared Class C in Appendix A with the following:

  Naturally aspirated cars with US produced 4-cyl, 6-cyl, and 8-cyl engines manufactured by a particular

corporation may be interchanged with any pushrod, DOHC, or SOHC engine offered by that corporation. Examples of swaps allowed include a Chevrolet engine would be allowed in a Pontiac, a "Coyote" 5.0L would be allowed in any year Mustang, an LS1 would be allowed in any year Camaro or Firebird, and a 3.7L DOHC V6 from a 2011+ Mustang would be allowed in any other Mustang. Alternate engines for a particular model must locate the bell housing to the block mounting surface in the same plane as the standard part. Vertical position of the longitudinal axis of the crankshaft shall remain the same as the original engine. Tolerance for both measurements is +/- 1/2 inch. Alternate material (aluminum) engine blocks may be used on U.S. produced 8-cyl engines. Any alternate engine block shall meet all other requirements of Section 17.

Forced induction cars may not substitute the engine for any other nor may forced induction engines be swapped into cars that the combination was not offered."

Also change the subsequent paragraph to read as follows:

Alternate iron or aluminum cylinder heads may be used on US-produced 4-cyl, 6-cyl, and 8-cyl engines. Any alternate cylinder head(s) used shall be ***of the same configuration (number of valves per cylinder and valve actuation method – pushrod or OHC) as the originals and shall be direct replacement type.***

- Change the listing in EP for the Mazda RX4 to read as follows:

RX4 (12A) (1974-78)
Specified Displacement: 2292 cc
Alt Spec: No peripheral port
Sedans (non-turbo, 2WD, NOC)

Also create a new listing for the Mazda RX4 in FP to read as follows:

RX4 (13B) (1974-78)
Specified Displacement: 2616 cc
Alt Spec: No peripheral port

Comment: The PAC feels the 13B rotary may be outside the engine power envelope of EP. There are no 13B-powered cars currently competing in EP and therefore this class change would not disenfranchise existing competitors.

July

- Replace 17.8.C.2 with the following (#7151):

The steering column is unrestricted. A collapsible type steering column having a layout and design and/or a column structure with impact and energy absorbing characteristics is strongly recommended.

- Add the following subsection to Appendix A, Section 9 for X Prepared (#7239):

c. Regardless of the Minimum Weight Calculations above, no car with a turbocharged or supercharged engine shall weigh less than the following Minimum Weights:

RWD: 1,700 lbs
FWD: 1,575 lbs
AWD: 1,825 lbs

Also add the following subsection to Appendix A, Section 1 for X Prepared:

h. Minimum track width of 55 inches

Comment: The intent of this proposal is to ensure the continued popularity of XP by limiting participation to vehicles above specified weight and width minimums. This proposal replaces the minimum weight proposal for XP originally published in the February 2012 Fastrack.

- Add the following to Appendix A for C-Prepared (#4597, 8315):

Traction control/stability control may not be added to a car which was not equipped with an OEM traction/ stability control system. OEM systems may be retained, but may not be replaced or modified in any way

other than deletion.

Comment: The intent of this proposal is to explicitly prohibit non-OE traction/stability control systems in C-Prepared.

MODIFIED

January

- The following reorganization of the Solo Vee rules has been provided by the MAC. The intent of this rewrite is to eliminate redundancies and to organize the rules so the reader can easily find things. Minor changes have been introduced to bring the original rule set, written over 15 years ago, and the updated rule set, introduced 5 years ago, into harmony.

Changes include the following:

- The engine rules are now contained in two categories: "Engine Choices" and "Engine Component Allowances". Valve sizes and carburetor choices, which are in two places in the current rules, are now found in a single location.
- Weight minimum is now in its own category. In the current rule set it is included in the definition of the category.
- All sub-categories have their own section.
- There was minor rewording of rules (particularly of the disc brake rule) to improve clarity. (The current rule--D.3.f.--refers to rear brakes. The proposed rule set clarifies the disc brake rule to include front and rear brake systems.)
- The current Solo Vee rules included an allowance for radiator fans for F500s (as well as Solo Vees). If this reorganized rule set is adopted, a radiator fan item will be added to the F500 section.

The proposal is as follows: Replace subsection C under Modified Class F in Appendix A with the following:

C. Solo Vee as per the following definition: Solo Vee is based on FV and all cars shall meet all specifications described in Sections 9.1.1.C.1, C.2, C.3, C.4, C.6, C.7, C.8, C.9, C.10, C.11 and C.12 of the GCR/FCS except as amended in these rules. No permitted or alternate component or modification shall additionally perform a prohibited function.

1. Engine Choices

a) Any stock 1600cc or smaller air-cooled automobile engine manufactured by Volkswagen (VW) for sale in VW vehicles available to the general public for purchase in the US is allowed.

b) Solo Vee engines may have increased compression up to and including 10:1 ratio with OE bore and stroke. Compression ratio may be increased by additional machining of any factory machined surface on the cylinder heads only. Fuel injection is prohibited. Valve size may be increased to a maximum of 40 mm intake and 35.5 mm exhaust. Port location may not be changed from OE stock. Machining of any type in the combustion chamber such as, but not limited to, valve unshrouding, is prohibited. Valve guide centers shall remain OE stock. OE stock heads shall be used, however, alternate VW heads with casting numbers 040 101 355 or 043 101 375 may be substituted. Any single carburetor (regardless of the number of venturis) is permitted. Multiple carburetion is restricted to a maximum of two 44mm carburetors with 28mm ventures. If a balance tube is used between manifolds runners, it shall be restricted to one 1/2-inch ID pipe. Any intake manifold not having a plenum chamber is permitted.

OR

c) Increase bore up to and including 94 mm maximum per cylinder, total displacement of 1915 cc. Machining to allow the installation of the cylinders is permitted. No other combustion chamber machining such as, but not limited to, unshrouding of the valves, is permitted. Valve guide centers must remain OE stock. Increased displacement engines up to 1915 cc are restricted to maximum valve sizes 39 mm intake and 32 mm exhaust. Port location may not be changed from OE stock. OE stock heads shall be used, however, alternate VW heads with casting numbers 040 101 355 or 043 101 375 may be substituted. A maximum compression ratio of 9:1 is permitted. Compression ratio may be increased by additional machining of any factory machined surface on the cylinder heads only. Any single carburetor may be used. Multiple carburetors are prohibited. Any intake manifold not having a plenum chamber is permitted.

d) There shall be no "mixing" of allowances, e.g. carburetors from "c" and displacement from "b" above.

2. Engine Components

a) Mixing of parts between different air cooled engine models is permitted. All parts must meet VW specifications for engines delivered for use in the US in VW vehicles unless otherwise noted herein.

b) Balancing of all moving parts is permitted provided balancing does not remove more material than necessary to achieve balance.

c) Parts from alternate manufacturers or remanufactured parts are permitted provided said parts are of the same material, are dimensionally identical, and meet all original VW specifications for engines delivered for use in the US in VW vehicles. This would include VW replacement heads as specified without raised ports and aluminum engine cases. Aftermarket magnesium engine cases may also be substituted.

d) The flywheel from either the alternate engine or from the 1200cc engine may be used. Minimum flywheel weight is twelve (12) lbs. Any single disk clutch may be used. The transmission housing may be machined to provide clearance when using the alternate engine flywheel assembly.

e) Any exhaust system which terminates more than three inches behind the rearmost part of the body may be used.

f) Counterweighted crankshaft and eight-dowel pinned crankshaft-to-flywheel mounting are allowed. All journal dimensions and relationships with each other must remain as stock. Crankshaft journals may be ground undersize a maximum of 0.030" less than stock dimensions. Crankshaft pulley is unrestricted.

g) Deep sump oil pan up to 2.5 quart additional capacity is permitted. The installation of baffles housed completely within the oil pan and crankcase is permitted. The use of any standard VW oil pump is permitted. Dry sump systems are prohibited. Replacement of oil gallery plugs with threaded plugs is permitted. Oil filters and oil coolers are unrestricted provided that they are securely mounted completely within the bodywork. A pressure accumulator (e.g. Accusump) may be fitted.

h) Camshaft and valve train components are unrestricted with the following exceptions:

1. Pushrods shall be made of metal.

2. Valve lifters (tappets) shall be dimensionally and functionally identical to and made of the same material as the standard VW parts.

3. Roller camshafts are prohibited.

4. Rocker arms shall be standard ratio VW.

5. Valve guide material is unrestricted provided that the distance between valve centers and the angles of the valves does not change.

i) Porting, polishing, and machining of the intake and exhaust ports is permitted. The addition of material in any form is prohibited. Valve seat angle(s) are unrestricted.

j) Compression ratio may be increased by additional machining of any factory machined surface on the cylinder heads only. Installation of a spark plug hole repair utilizing standard thread repair methods (such as Helicoil) is permitted providing that the spark plug centerline is not changed.

k) Complete or partial removal of any cooling duct component. Removal of the fan and the fan housing is permitted. Any electric fan is permitted for cooling the engine or engine oil.

l) Voltage regulator, generator, and/or generator stand may be removed.

m) One or more batteries may be used.

n) Any ignition system that utilizes a distributor for spark timing and distribution may be used. Distributor shall require no modification to the engine for installation. Internal distributor components and distributor cap may be substituted.

o) Valve covers are unrestricted and may be bolted on.

3. Transaxle

a) Aftermarket shift forks/shift rod/mounting parts and alterations required for their installation is permitted with the intent of facilitating reliable H-pattern shifting.

b) This allowance does not include sequential shifting (push button or single axis lever movement) mechanisms or electric/gas assist. Cable/hydraulic actuating mechanisms are allowed.

c) A device for locking-out reverse gear may be used.

d) A limited-slip differential (LSD) is permitted.

4. Bodywork

a) Bodywork to the rear of the main roll hoop may be removed.

5. Front Suspension

The front suspension shall be standard VW Type I sedan H-beam front suspension (i.e., link pin or ball joint) or an exact replica of one of them and dimensionally identical. Aluminum H beams are prohibited. The following modifications are permitted:

a) Lugs may be welded, brackets attached by welding or otherwise, and holes drilled in the H-beam to permit attachment of the beam to the chassis, and components wholly or partially to the beam. Brackets may be welded to the torsion arms for the sole purpose of actuating the shock(s) and/or external mounted anti-roll bar and shall perform no other functions.

b) Open springs. Torsion bars may be used in conjunction with coils or may be removed entirely. Coil-overs are permitted.

c) Removal of the shock towers above the upper H-beam tube centerline.

d) Relocation of the shock dampers is permitted. Shock dampers and their actuation are free.

e) The use of any anti-roll bar or bars, internal or external, mounting hardware, and trailing arm locating spacers. The anti-roll bar fitted as part of the standard suspension may be removed. Anti-roll bars may not be cockpit adjustable.

f) Replacement of torsion bar rubbers with spacers of another material.

g) Installation of any ride height adjuster(s) is allowed.

h) Removal of the drum brake backing plates is allowed.

i) In the link pin suspension, non-standard offset link pin bushings may be used in order to obtain desired negative camber. Clearancing of carrier or trailing arm to prevent binding is permitted. The rubber portion of the bump stop may be removed. Caster, camber, toe-in, and link pin inclination are free.

j) In the ball joint suspension, the camber/caster adjusting nut may be replaced with an aftermarket nut of different design. Caster, camber, and toe-in are free.

k) Any wheel bearings that fit the VW sedan spindles and brake drums or disk brake hubs without modification may be used.

l) Steering column may be altered or replaced. Steering wheel is free and may be detachable. Steering mechanism is free but tie rods must attach to the spindle using existing steering arm, a modified steering arm, or a suitable new or modified bracket welded to the spindle. Ball joints in the tie rods may be replaced with rod ends.

6. Wheels

a) Any wheels and tires are allowed. Resulting track changes are allowed. Studs may be substituted for wheel attachment bolts in the original location.

b) 4 or 5 lug wheel hubs may be used. Wheel mounting lug bolts may be replaced with studs.

7. Rear Suspension

a) The rear axle and tube assembly shall be standard VW Type I up to 1966, sedan swing axle (no outer pivot point for a half shaft) with axle location provided by a single locating arm on each axle. The rear axle tube may be rotated about its axis. The standard shock mounting and brake pipe brackets may be removed.

b) The rear axle bearing retainer flange mating surface may be machined or shims may be installed under the rear axle bearing for the sole purpose of adjusting bearing axial float.

c) Springs, shock dampers, their actuation, and camber compensating devices are free.

8. Braking System

a) Standard VW Type 1-3 brake components, disk or drum, may be used including any standard VW Type 1-3 original. Use of aftermarket hubs, disc or drum brake components in the front or rear of the vehicle, or any combination thereof is unrestricted as long as the units chosen are deemed safe.

b) Caliper housing material may be removed on the outer radius surface of the outer piston housing to clear the inside of the rotating wheel.

c) Any type lining or pad material may be used.

d) Adapter plates may be fitted to allow mounting of front or rear brake calipers.

e) Cross-drilling or grooving of rotors is permitted. Rotors made of a ferrous material shall be used on both the front and rear of the car.

f) Caliper mounting is free. Rotors must be of ferrous material. Hubs and hats may be made of ferrous material or aluminum.

The allowances above apply to front and rear brakes.

g) The car shall be equipped with a dual braking system operated by a single control. In case of a leak or failure at any point in the system, effective braking power shall be maintained on at least two wheels.

h) A separate hand brake is not required. Removal of the hand brake and operating mechanism is permitted.

i) Brake lines may be of any suitable material, including steel braided lines.

9. Weight

a) Minimum weight is 1000 lbs with driver.

Also add in Appendix A, under Modified Class F, subsection A, a new subsection 9 as follows (to retain the allowance which is no longer contained in the above restructure):

9. Electric radiator/engine cooling fan(s) may be installed.

July

- Add new section 18.1.D.6 as follows:

6. Turbocharging and supercharging are permitted for all engines, subject to the displacement factor of 18.0.C. In class D Modified, such induction systems must have a restrictor on the inlet side of the turbocharger/supercharger. All inducted air must pass through this restrictor, which must be constructed of metallic material. The minimum orifice (choke) diameter of the restrictor shall be no greater than 33mm. The restrictor passage may be shaped fore and aft of the choke region. The restrictor choke region must be made of one piece, without moving parts.

October

- Relocate/modify sections pertaining to Solo Vees as follows:

- Move subsection B in its entirety from under Modified Class F into Modified Class C.

- Move subsections C, D, and E from under Modified Class F into Modified Class C.

- Remove the “Solo Vee” under subsection F under Modified Class F, and create a corresponding item under the Solo Vee rules as moved into Modified Class C.

Comment: This version of the proposal makes no changes to existing Solo Vee preparation allowances. The MAC neither intends nor expects the competitive position of the FF platform to change with this move. This revised form of the proposal was provided to address concerns with the original which were expressed by the membership.

RALLYCROSS BOARD

RALLYCROSS BOARD MINUTES | September 5, 2012

The RallyCross Board (RXB) met via conference call September 5. Attending were Ken Cashion, Chairman, Bob Ricker, Brent Blakely, Karl Sealander, Warren Elliott, Stephen Hyatt and Ron Foley. Also in attendance were Todd Butler and Stephen Harris, BoD liaisons.

The Secretary acknowledges that these minutes may not be in chronological order.

Chairman Cashion called the meeting to order at 7:00pm CDT.

Committee Reports

- RallyCross Safety Committee (Bob Ricker): Ricker reported that the changes to the Safety Steward Training presentation suggested by the RXB after the last meeting have been made. Ricker will forward the presentation to the legal department for approval prior to publishing it at the SCCA website.

  The Safety Steward training session in Colorado is still pending. Current plans are for a September date in conjunction with an event.

  Ricker also reported that no incidents have been reported thus far in 2012.

- RallyCross Rules Committee (Warren Elliott): The Tuner category rules proposal has been posted at the forums and has prompted several comments from the membership. Some comments suggest the additional category will dilute the other categories. The Rules Committee will continue to monitor comments.

  A tech bulletin has been posted at the forums clarifying that for the Stock Categories any tire size is allowed as long as it fits on the stock rim and doesn't interfere with suspension or body parts. This bulletin will also be posted at the SCCA website.

  Elliott requested adding Pete Remner as an additional member to the Rules Committee.

- National Championship Committee (Brent Blakely): See New Business below.

- Marketing Committee (Ron Foley): The goal is to place the open invitation to the National Championship from Ken Cashion as a banner at the RallyCross tab of the SCCA website and send it out as an E-Blast.

  Warren Elliott will start his "Who's Going to Win" thread at the forums the week of September 10.

  Foley is continuing to work to secure a school certificate from Team O'Neil Rally School to be given as the Hard Luck Award at the 2012 National Championship.

  Foley is continuing to request National Challenge results be linked to the RallyCross National Challenge page of the SCCA website.

- Divisional Steward Liaison (Stephen Hyatt): The deputy steward program is progressing with nearly half of the Divisions having a deputy steward. Hyatt requested each RXB member contact his respective Divisional RallyCross Steward buddy to encourage finding a deputy steward if one has not yet been found.

  The search for a new Divisional Stewards' chairman continues, as a willing chairman has not yet stepped forward. Hyatt will continue the role in conducting the monthly conference calls. The issue will be addressed again in December.

  Hyatt has organized a Regional programs conference call scheduled for September 17 at 7pm CDT. This will be a conference call where all Regional program directors can meet and discuss various RallyCross topics and their programs' needs. Planned discussion items are the program growth initiatives, questions from the Regions, and a request for National Championship attendance in October.

- Forum Activity: Warren Elliott reported that few forum discussions have occurred in the past month but with an increase of discussion following the release of the Tuner category rules.

Old Business

- Safety Steward Licensing: The RXB discussed Safety Steward licensing standards, the role of the Divisional RallyCross

Stewards in that process, and possible alternative processes in cases of conflict or tension between Regional and Divisional personnel. This will be a continuing topic of discussion and is planned as a discussion item with the Divisional RallyCross Stewards at the 2013 SCCA Convention.

- Class champs list (Ken Cashion): Cashion reported no progress since the last meeting. He will have the list together for the publication of the 2013 RallyCross Rules.

New Business

- Distribution of duties for National Championship event: Brent Blakely announced he would no longer be able to attend the 2012 National Championship or to his work duties there. Ken Cashion suggested dividing up those work duties among the other RXB members. Those divisions will be Foley covering the schedule and order, Cashion will address the site plan and logistics, Elliott will take care of personnel, and Hyatt will be the Region interface and take care of any information distribution. A final meeting prior to the event is scheduled for around September 19.

- 2013 National Challenge proposal (Howard Duncan): Tabled until the next meeting when Howard Duncan can attend. Ron Foley requested an earlier scheduling process for the 2013 ideally occurring during the last quarter of 2012.

The meeting adjourned at 8:51pm CDT.

Next meeting: October 10, 2012

Submitted by Karl Sealander, RXB Secretary

ROAD RALLY BOARD

ROAD RALLY BOARD MINUTES | Sept. 4, 2012

The RoadRally Board met via conference call on September 4, 2012; called to order at 7:35 pm CDT.

In attendance: Chairman Rich Bireta, Jeanne English, Chuck Hanson, Sasha Lanz, Eva Ames, Clarence Westberg, Deena Rowland from the National Office, BOD liaisons Steve Harris and Bob Lybarger; not in attendance: RRB member Jim Wakemen, Howard Duncan from the National Office.

August minutes approved.

Opening Comments from Chairman Rich Bireta:

1. November *Sportscar* On Rallying column by Rick Beattie - nice column, we are all in this together, everybody responsible for getting road rally items done; chairman's job is to keep things on track, keep things moving; the October column was positive about the USRRC; Sasha suggested doing an article about regions that are doing things that warranted articles, Rick was already planning to do this.
2. RRB members again do one RRB-task this month – worked well this past month, good start to getting things done.

Old Business:

1. National Committee membership discussion about candidates done in Executive Session. More in October.
2. 2013 USRRC Location -- solicitation for 2013 Host Region reposted 8/29; Rich will post to the Yahoo group; Eva will post to the Facebook page.
3. Eva will post the flyer for this year's USRRC to the forum, and on the SCCA Web page; what about a press release? Deena will do this. Eva will wait for official SCCA release, and then make sure other postings agree.
4. 2013 Rules Change – Review Experience-Based Classes proposal:
   Chuck updated proposal in the Dropbox and reported that there were not many comments on the Forum, one revision is to keep three lists – GTA, tour, course, and a suggestion that those already in master stay there which keeps sportsman and expert open to those entering; Chuck explained the points and changes; Clarence says that this primarily affects GTAs. **Motion** (Sasha/Chuck): refer this proposal to the rules committee with comments due back by the end of Sept; passed with Clarence opposed.
5. RRB Recurring Calendar: see proposed calendar in the Dropbox; Rich asks that we look at the document, see if there are any omissions; talk about it next month.
6. Road Rally Events Calendar at www.scca.com:
   There was discussion regarding user-maintained calendar on Yahoo group. Rich feels that we need an RRB position as follows:
   i. Sanction requests cause entry in scca.com Rally Events (current process)
   ii. (Google search of "road rally events scca" returns this as top hit)
   iii. Jeanne maintains "Prospective Events calendar", needs to be easier to find on the SCCA website
   iv. Add link under "Rally Events" to "Prospective Events", which is Jeanne's calendar
   v. A broader calendar (including non-SCCA sanctioned events, end-user-maintained) is a topic for the broader road rally community to address.

   Regions need to send in 2013 events NOW so they can be listed; reminder - there is no charge for a calendar request.

Break 8:37, reconvened 8:46

New Business:

1. Special recognition (Chuck) – deferred.
2. National Events Committee – 2013 (Clarence) – Clarence met with Mike T. and Bob D in August; make comments to Clarence by Sept 14
3. Regional Development Committee -- Rich is looking forward to getting going on this.
   Sasha suggests regularizing committee names: National Events Comm., Regional Events Comm., and GTA Events Comm. Publicity Committee -- Dave Head has volunteered, still recruiting other members; Sasha is waiting until after the first Publicity Committee meeting before having a GTA Comm. Meeting.
4. USRRC 2012 – Detroit – which RRB members are planning to attend? Clarence, Sasha, Deena, Jeanne, Chuck, Rich; Town Hall Saturday night.
5. Posting National Standings -- who does this, when? Eva posts on the Forum, Deena will check with SCCA webmaster about posting on the SCCA website.
6. Closed Controls – Receiving in time (Clarence) – how do you know what your times are at passage controls? He thinks this should not be allowed, that we should be able to see our times during the rallies; should we refer this to the rules committee? Solicit comments from committees and/or contestants who put on/compete in these rallies?
7. Review To Do list. – Sasha found the list, Rich consolidated, it's in the Dropbox – it's a very long list, pick six or so that you

think we should work on, we will compare lists next month.

8. Other new business – Clarence says we need more rally pictures.

Next meeting Tuesday, October 2, 2012, via conference call.

Meeting adjourned at 9:30 pm CDT

Respectfully submitted,

Jeanne English, RRB Secretary

QUICK LINKS

The following items have been removed from regular inclusion in Fastrack News and can be found on SCCA's Web site at the following links:

CLUB RACING

Runoffs Event page: http://www.scca.com/runoffs
Accredited Driver Licensing Schools: http://www.scca.com/clubracing/content.cfm?cid=50864
Forms: http://www.scca.com/downloads/#club
Technical Forms: http://www.scca.com/clubracing/content.cfm?cid=44472
General Competition Rules (GCR): http://www.scca.com/clubracing/content.cfm?cid=44472

SOLO

40th Tire Rack SCCA Solo National Championships: http://www.scca.com/solonationals
Forms: http://www.scca.com/downloads/#solo
Rulebook: http://www.scca.com/downloads/#solo

RALLY

Forms: http://www.scca.com/downloads/
Rulebooks: http://www.scca.com/downloads/

SCCA NATIONAL CONVENTION

Event page: http://www.scca.com/events/index.cfm?eid=4495

EVENT CALENDAR: http://www.scca.com/events/

Fastrack news
official SCCA member notification
EFFECTIVE FIRST DAY OF THE MONTH UNLESS OTHERWISE NOTED November 2012

CONTENTS

BOARD OF DIRECTORS	**1**
CLUB RACING	**55**
CRB Minutes	55
Technical Bulletin	62
Court of Appeals	64
Time Trials Admin. Council	71
SOLO	**72**
SEB Minutes	72
RALLY	**76**
RallyCross	76
RoadRally	78
LINKS	**80**

BOARD OF DIRECTORS

SCCA Board of Directors Minutes | October 11-13, 2012

The SCCA National Board of Directors met at the National Office in Topeka, KS on Thursday, October 11, Friday, October 12 and Saturday, October 13. The following directors participated: Jerry Wannarka, Chairman; Lisa Noble, Vice-Chairman; Dick Patullo, John Walsh, Bill Kephart, Todd Butler, Secretary; Bob Lybarger, Michael Lewis, Treasurer; R. David Jones, Robin Langlotz, Steve Harris and Brian McCarthy. Phil Creighton participated via conference call.

The following SCCA, Inc. staff participated in the meeting: Jeff Dahnert, President and CEO; Richard Ehret, Vice President Finance; Howard Duncan, Vice President Rally/Solo & Special Projects; Terry Ozment, Vice President Club Racing; Eric Prill, Vice President Marketing and Communications; Colan Arnold, Vice President Member & Region Services, and Aimee Thoennes, Executive Assistant.

The following guests participated: Steve Hudson, SEB Chairman; Jim Wheeler, CRB Chairman; Dan Helman, Insurance Committee Chairman; Paul Pfanner, Founder / President / CEO / Executive Publisher of Racer Media & Marketing, Inc. ; Pasquale Trozzolo, Angelo Trozzolo and Jeff Madden, Trozzolo Communications Group; K. David Nokes, Chairman of the Stewards; Tom Campbell, President SCCA Pro Racing.

The secretary acknowledges that these minutes may not appear in chronological order and that all participants were not present for the entire meeting.

The meeting was called to order by Chairman Wannarka.

PRESIDENT'S REPORT
President Jeff Dahnert gave a status update on several initiatives for 2012. In general participation is mixed, some areas are up and others are down. Membership is slightly up. Dahnert gave a progress report on the Majors. Dahnert reinforced that the common goal is a healthier national racing program. The combination of the operational strengths of the staff involved and the strategic vision of the members of the planning committee are working congruently toward that end.

Dahnert gave updates on the Solo/Rally department reorganization, the branding/marketing initiative project and the insurance RFP process. Formal updates will be given later in the meeting. He also touched on the successes of the National Championship events in Club Racing, Solo and Rally. Dahnert was able to work with ACCUS and the United States Racing Management Board to establish the requirement that all workers for the Austin Formula 1 event, be licensed SCCA or USAC workers. The event is scheduled for November 18.

There was a review of additional actions in place to strengthen SCCA. Dahnert gave an overview of the accomplishments over the past year with a review of membership revenue, sponsorship and reserves from 2005 to 2012.

FINANCE REPORT
Ehret gave a year to date financial report through September 30, 2012. He reported that year to date revenues and expenses were both 1% below budget. SCCA, Inc. will finish the year with a net operating loss, as planned. Investment results have increased the non-operating reserves.

SCCA Pro Racing is performing to budget. The accounting for SCCA Enterprises was successfully moved under SCCA, Inc. which is providing a cost savings for Enterprises. Enterprises is responsible for their inventory and sales accounting. Their net income year to date is positive but below budget.

The process for the Insurance RFP is on track and he and Dan Helman will present an update to the board later during the meeting.

RALLY AND SOLO REPORTS
Duncan gave an update on the successful restructuring of the Rally/Solo Staff Department. It has resulted in improved member service activities. The team provided support to the FSAE event in Lincoln.

There was discussion on the divisional meetings and the need to improve the Rally and Solo program offerings at these meetings. It was requested that Divisional meeting dates be provided to Staff so their participation can be ensured.

Duncan gave a preliminary report from the Solo Nationals which was a successful event with participation close to that of 2011. There is concern about overall participation in the Solo program and there is a need to help grow regional programs. The SEB, like most program boards, get bogged down in the details of letters and adjustments. In addition, the program boards are empowered to think strategically and consider ideas to promote growth in their programs.

Duncan requested feedback from the board regarding the convention program board meetings with the board of directors. Going forward, it is the desire of the board to meet with the entire SEB. This also gives the members of the SEB access to Region leadership in order to work together in developing programs.

Duncan explained the Starting Line Autocross School, a joint effort with Evolution Performance Driving Schools. The program is designed to introduce enthusiasts to Solo and get them off the couch.

Steve Hudson, SEB Chairman presented the rules package. There was discussion over the item 1.3.2 which addresses the use of controlled susbstances and concern that as it was currently written, OTC drugs such as decongestants or antihistamine could potentially be caught up in this wording. The item was deferred. The CRB and SEB will be asked to coordinate and propose the appropriate language for use in the GCR and Solo Rules.

Hudson provided an overview of the proposed rule changes and their impacts.

> **MOTION:** to approve General Items 2-6, Stock Items 7-12, ST Items 13-15, Street Prepared Items 16-28, Street Modified Items 29-32, Prepared 33-40, Modified 41-43. Walsh/McCarthy. PASSED 12-0. Creighton absent. (See Appendix A – SEB Recommended Items)

Note of thanks: The Board wishes to express their appreciation to the SEB and advisory committee members for the many hours of volunteer work that goes into the rules preparation.

RALLYCROSS REPORT
Duncan reported the RX National Championship from the past weekend was very successful. Entries exceeded 2011. A Town Hall was held with the RXB and 2 members of the SCCA, Inc. BoD to get event and overall feedback.

ROADRALLY REPORT
Duncan addressed the changes in the RRB membership due to resignation and retirement. There are actions in place to refocus on general program growth. The purpose of rally is to serve regions and grow quickly and profitably.

HALL OF FAME REPORT
Duncan gave a progress update for the Hall of Fame. Vacancies on each committee have been filled and are done so to ensure that the programs of SCCA have representation on each committee. The nominating committee has received many nominations this year to be added to the list for review. They will narrow the list to a recommended list for review by the Selection Committee. Traditionally 5 members are selected each year for induction into the Hall of Fame. The Board does not have any involvement in the process or approval.

INSURANCE RFP REVIEW
Dan Helman and Rick Ehret presented the overview of the Insurance RFP actions and timelines.
RFP process was designed to review total insurance coverage and work thru an insurance broker to manage an RFP sent out to ~40 different carriers. The broker will compile results and shortlist carriers which the Insurance Committee will then review and select based on several criteria for recommendation to the BoD. The Insurance Committee is comprised of Dan Helman and Rick Ehret as well as, Ed Locke, Chicago Region, John Zuccarelli, Florida Region and Michael Smith, San Francisco Region. The Insurance Committee will develop cost recovery models. The intent is to understand real cost of current coverage, and the cost of individual component coverage, coverage amounts and make intelligent and cost effective choices. BoD will review recommendations for carrier, allocation and cost recovery at their December BoD meeting.

Dahnert noted that Rick Ehret, Dan Helman, Mike Smith, John Zuccarelli and Ed Locke did an outstanding job coordinating this complex process.

MARKETING/BRANDING INITIATIVE
Pasquale Trozzolo, Angelo Trozzolo and Jeff Madden presented a progress update including the next steps and timeline. The

group was engaged to design a campaign to drive membership and participation. The Trozzolo group provided multiple concepts to the Board. They were also engaged in support for the Majors roll out program at the Runoffs.

SPORTSCAR
Paul Pfanner presented concepts for an improved SportsCar. The Board will review the proposal. A straw vote by the Board showed strong support for continued paper editions of SportsCar.

MARKETING/COMMUNICATIONS REPORT
There were $1.8 Million in contingency postings for the Runoffs. 80% of competitors registered for the contingencies. Solo Nationals had $915,000 with only 433 competitors registered.

Prill provided supporting data on existing sponsors and brand loyalty/awareness. There is high recognition and brand awareness with SCCA members which helps us sell sponsorship. Discussion over sponsorship for the Majors program. There was discussion about SCCA sponsorship negotiated at a national level versus event level which may be negotiated at the region level. More work is required in this area to define the possibilities and programs to develop policy and guidelines going forward.

CLUB RACING REPORT
Ozment gave an overview of the Runoffs and plans for the 50th Anniversary next year as well as the Runoffs in 2014.

Ozment debriefed the board on the aspects that were successful and the aspects that are in need of improvement for next year. She updated the board on the plans in place for 2013. There is a need for verbiage relative to the role of staff in the operations manual for vote at the December meeting.

Ozment provided detailed Runoffs statistics, participation and actions.

Initial thoughts for 2013, the 50th Anniversary of the Runoffs was presented to get Board feedback. Details will be presented to the Board in December and the plan is to announce the preliminary schedule in December for 2013. The Board agreed that for the 50th anniversary event we should revert to the 7 day event schedule with practice and qualifying completed by Thursday afternoon and Thursday afternoon held as a celebration with special events on and off track.

Ozment has contacted a number of tracks across the country about their overall availability to host the runoffs. The goal is to narrow to 4-5 tracks for Board consideration by the December 2012 board meeting.

Terry reviewed the remainder of Club Racing's 2012 projects.

There will be a Time Trials rules package for vote in December.

> MOTION: That the Southwest Division of the Sports Car Club of America be allowed to hold a one time only Double National race weekend at the Circuit of the Americas racetrack in Austin, Texas during the month of December 2013 counting towards the 2014 season. FAILED for lack of a second.
>
> There was concern by the BoD over starting the 2014 National competition season prior to the beginning of 2014.

MAJORS REPORT
Kephart updated the Board on the Majors and changes made as we move into 2013. These changes will be based on what was learned from the pilots in 2012 and feedback from the regions. There will be a formal announcement forthcoming. In an effort to reinvigorate our national club racing program, SCCA is going to 2 Tier racing in 2014. The U.S. Majors Tour or USMT will be the new National Club racing program with renewed purpose to provide exceptional racing to competitors. The other tier will include current regional/divisional racing which continues to give regions flexibility in their unique events.

There will be two paths to the Runoffs. One path via divisional championships and the other through the USMT. In the USMT, there are 4 conferences hosting ideally 6 races per conference for a total of 18-24 races total, including 10 Super Tours. There will be 4 Invitationals which will be 5 race groups with 10 classes (top classes in a conference). These events will be doubles.

POLICY STATEMENT: The Board of Directors endorse the further national rollout of the 2013 U.S. Majors Tour and the public release of the vision for 2014 and beyond. Patullo/Kephart Opposed Langlotz, Lybarger. Absent: Creighton. PASSED. 10-2-1.

For additional details, see Appendix D.

Kephart thanked those who served the staff and those who have worked on the planning committee… including past members RJ Gordy, Marcus Merideth and John Sheridan. This effort has been a long term commitment for those involved.

CRB RULES PACKAGE

CRB Chairman, Jim Wheeler provided an overview of the Rule package. Note: the complete wording for the following rule changes can be found in Appendix B. Notations below are only to record the board votes per item.

> MOTION to approve the GCR items #6027, 6259, Minor Licensing, 7640, Use of #1, 7818, 7829, 7812, 8702, 9046 and FIA Seats. Patullo/Butler. PASSED 12-0. Creighton absent.
>
> MOTION to approve Formula Sports Racing item 8803. Patullo/Butler. FAILED 3-9. Opposed: Lybarger, McCarthy, Walsh, Jones, Lewis, Langlotz, Kephart, Wannarka, Harris. Creighton absent.
>
> MOTION to approve the Formula/Sports Racing FF FC: 5636, 9030, 8799. Patullo/Butler. PASSED 12-0. Creighton absent.
>
> MOTION to approve the Grand Touring GT 9327, 7828, 8176, 8749, 8971; Improved Touring 4220, 4407, 9410; Super Touring 7824, 9412, 8975, 9413, 8756, 7717; Production HP item 8531. Patullo/Butler. PASSED 12-0. Lewis abstained from GT item 7828. Creighton absent.
>
> MOTION to approve American Sedan 8415, 8416, 8319, 8955, 9524; 9304 and 9517. Patullo/Butler. PASSED 12-0. Creighton absent.

Discussion on Touring category classes and strategic vision to promote growth of the class. Kudos to the CRB for a well written introduction to the TCS.

> MOTION to accept the TOURING RULE PACKAGE as presented. As part of this reorganization, STO, SSB and SSC classes will cease to exist beyond 2012. Patullo/Butler. PASSED. 10-1-1. Opposed: Wannarka. Abstained: Jones. Creighton absent. See Appendix C for the detailed package.
>
> MOTION for item 3 # 9525 to make B-Spec a national class in 2013. Patullo/Buter. PASSED. 12-0. Creighton absent.

Note of thanks: The Board wishes to express their appreciation to the CRB and advisory committee members for the many hours of volunteer work that goes into the rules preparation.

Note of thanks: The Board wishes to acknowledge the many letters from the Touring Community that helped shape the revised Touring car package.

An advisory committee will be formed to maintain B-spec as single class set of rules. The committee will include manufacturers and other sanction bodies.

Wheeler reported on the vacancies on the CRB for 2013.

EXECUTIVE STEWARDS REPORT

Nokes gave an update on the current state of the program which he has lead for the past three years. He reviewed the program challenges and his thoughts moving forward. Over the last three years, they have enacted multiple initiatives including developing and documenting best practices for operating events, revising training for new stewards, building training tools, improving communications and developing performance reviews and evaluation basics for stewards.

Challenges going forward were identified as the need to change the perception of stewards from a detriment to a valuable asset in SCCA racing, more aggressive recruitment, better execution and increased accountability.

Stewards actions (CSA/TFA) through September 2012 were reviewed as well as reasons for the differences between Divisions. No conclusion was reached.

Wannarka thanked Nokes for being the instrument of change in the Stewards Program and his efforts to improve the program nationwide.

LIAISON REPORTS

John Walsh and Bob Lybarger reported on the marked improvements in the efforts of the SOM courts. This is attributed to the training programs developed in the Stewards program. The Runoffs presented the COA with logistical challenges and the process is being evaluated for 2013. Mike West will be stepping down as Chairman of the Court of Appeals at the end of this year. The Board will appoint a new chairman in December.

Robin Langlotz provided an update on the SCCA Foundation.

SCCA PRO RACING
SCCA Pro Racing has had a successful year. The only negative issue was with the dissolution of the F100 Series and Campbell is working with the promoter towards resolution. The 2013 schedules are out for some series and still in process for others. The impact of the GrandAm/ALMS merger on SCCA Pro Racing is still being assessed.

MOTION to adjourn Lybarger/Harris. **PASSED 12-0.** Creighton absent. Meeting Adjourned.

Appendix A: SEB Rule Changes

Action Items for implementation 1/1/2013

GENERAL ITEMS

ITEM 2) Replace the latter portions of Section 3.1, "Rollover Potential Guidelines":

a. Rollover Potential Guidelines

The SSC has reviewed the allowance of competing cars with higher roll centers and has prepared the following chart to be used as a guideline for assisting Regional members in determining whether a vehicle has a higher than average potential to roll over in Solo® competition. Vehicles falling into the acceptance range still have the probability to roll over but they are less likely to roll over than those that are not in the acceptable range are. This chart is for all vehicles specifically listed in Appendix A.

An approach of this type is required to help event officials assess the rollover risk potential of vehicles which fall in a gray area between traditional Solo® cars and those which clearly have a "high center of gravity". While it is imperfect, it should strike a balance between risk reduction and admission of the most vehicles to Solo® while introducing a consistent procedure for doing so.

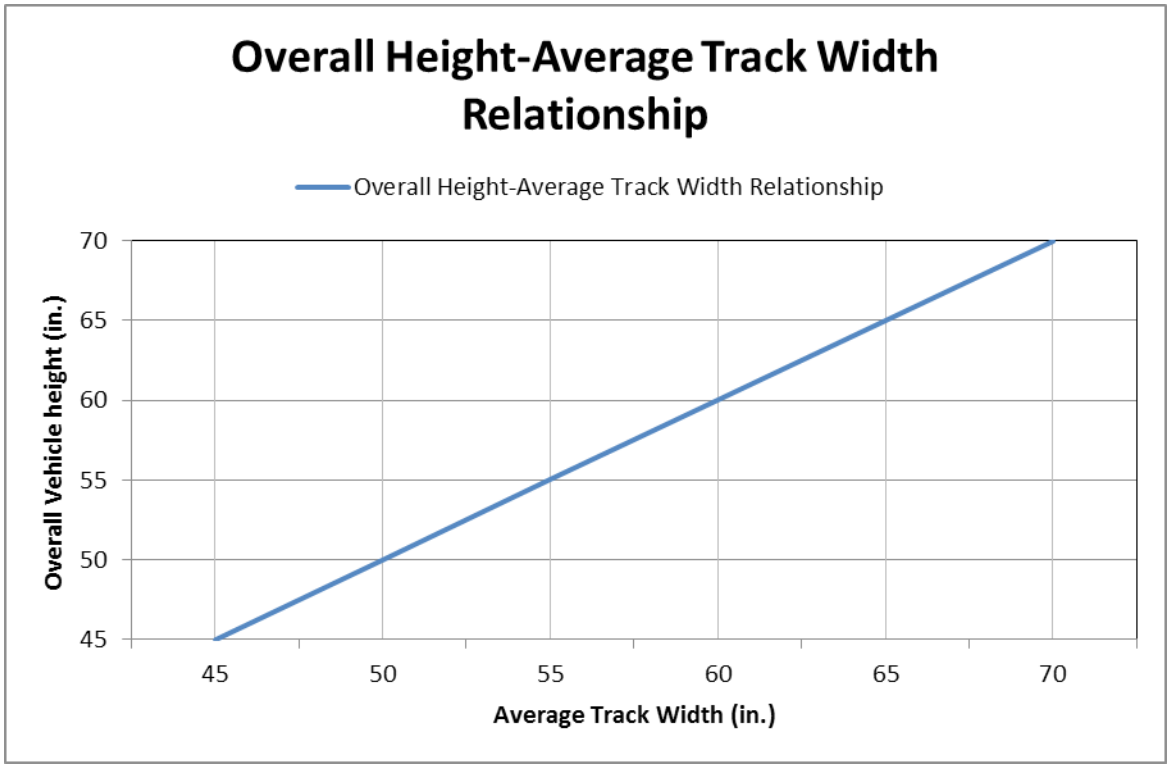

The measurements are to be taken from the ground to the tallest point of the vehicle for the Overall Vehicle Height and the normal track measurement as stated in Section 12.5 for the Average Track Width.

The SEB may use Static Stability Factor (SSF) for classing new vehicles. Static Stability Factor is defined as one half the track width divided by the height of the center of gravity above the road. Vehicles with an SSF of less than 1.30 should not be permitted to compete in our Solo® events due to their higher risk of roll over.

b. Physically disabled drivers may use alternate vehicle controls and preparation items appropriate for the nature of their disability. In the case of a driver using alternate controls, extra care should be taken to ensure that the driver does have adequate control of the vehicle and that the control mechanisms can stand up to competition use. A waiver from the SCCA® Technical Services Department is required for the use of such equipment in National Solo® events. Requests will be handled on a case-by-case basis.

November 2012

ITEM 3) Change the second sentence of 4.1.A:

Any underage driver who has the legal authority (license or permit) to operate an automobile with restrictions on a public road may compete at Solo events, as long as the restrictions of the driving license or permit are met, and the event allows a passenger.

Also add to the end of 4.1.A:

The provisions of 4.1.D provide event officials discretion with regard to the entry of any driver.

May 2012

ITEM 4) Delete Section 4.9.

Comment: The SEB believes it can effectively serve the needs of the program by monitoring the class structures and participation levels, and dealing with issues on a case-by-case basis as they arise.

April 2012

ITEM 5) Change the first three sentences of 8.4:

The protest *should* be decided on the day of the event by a PC of at least three members, within a reasonable time following completion of the event. If the protest cannot be decided on the day of the event, the PC must resolve it within *10 calendar days unless agreed to by the parties*. The delayed protest decision will be *forwarded to* both parties of the protest in *a mutually agreed upon method of either email or certified mail*.

Also change the second sentence of 8.4.1:

Members of the PC may also be drivers in the same event, but *at the National Championship* will not perform any other duties than those of the PC.

May 2012

ITEM 6) Revise Appendix I:

Sound Measurement at SCCA National Solo Events

The maximum limit will be 100 dBA.

The measurement will be taken at a point where the vehicle can reasonably be expected to be under load at full throttle. The measuring point will be 50 feet from the edge of the course using an ANSI Type 2 sound meter set to "A" weighting, "Slow" response. The microphone will be 3 to 4 feet above ground level, positioned perpendicular to vehicle direction of travel. The microphone will be away from structures (e.g., buildings, etc.) as is practical.

If a vehicle exceeds 97 dBA, the Chief Steward or his/her designated representative will be notified by the Sound Control Steward or representative. The Chief Steward or representative will notify the driver of any measurement over 97 dBA.

If a vehicle exceeds 100dBA, the driver will be allowed an attempt to reduce the sound level of the vehicle before his/her next scheduled run that day. (A "mechanical delay" per Solo Rules 6.8.D may be used.) If a viable remedy has been attempted in the judgment of the Chief Steward or representative, the driver will be allowed a "second chance" for the next scheduled run. If the driver declines any "repair action" or the "repair" is deemed inadequate by the Chief Steward or representative, the driver will forfeit all subsequent runs in the vehicle (unless an adequate

"repair action" is completed before the next scheduled run). If the vehicle exceeds 100 dBA again on the "second chance" run, the driver will be allowed another attempt as before to reduce the sound level. The Chief Steward or representative may approve a final "third chance" run after another remedy to reduce the sound level. If the limit is exceeded on the "third chance" run, the run will be scored a DNF.

Any "repair actions" to reduce the sound level of a vehicle may not be removed (including the next day of the event) and may be subject to re-inspection by the Chief Steward or representative. If the "repair" has deteriorated after passing the sound level requirements at the measuring point, it must be addressed again. The Chief Steward or representative has the right to disallow a repeat of the "repair action" that deteriorated. The "repair action" may be changed or modified to improve the quality of the "repair" and/or further reduce the vehicle sound level. Drivers that receive a DNF for non-compliant sound limits must make further "repair actions" to reduce the sound level to compliant readings before starting runs the next day.

These general sound limit regulations WILL NOT override specific local area and/or SCCA Regional sound limit requirements, regulations, and/or penalties.

April 2012

STOCK CATEGORY

ITEM 7) Change the last sentence of 13.8.B:

"However, no suspension part may be modified for the purpose of adjustment unless such modification is specifically authorized by the factory shop manual."

Also remove from Appendix F, STOCK CATEGORY CLARIFICATIONS, the item titled "PORSCHE STRUT ORIENTATION."

April 2012

ITEM 8) Move to FS from AS: BMW M3 (E90/E92/E93 Chassis) (2008-2012)

July 2012

ITEM 9) Move to FS from AS: Lexus IS-F (2008-2012)

July 2012

ITEM 10) Move to FS from AS: Mercedes C63 AMG (non-Black edition) (2008-2012)

July 2012

ITEM 11) Move to FS from BS: BMW M3 (E46 Chassis) (2001-2006)

July 2012

ITEM 12) Move to FS from BS: Chrysler Crossfire SRT-6 (2005-'06)

July 2012

STREET TOURING CATEGORY

ITEM 13) Replace 14.10.A:

Oil pans and pickups may be modified or substituted. Addition or modification of windage trays or crankshaft scrapers is not allowed.

Comment: Based on member feedback, this expands on the previously published proposal allowing oil pickup relocation within the OE pan. It is intended to allow common bolt-on solutions to oil starvation issues caused by high cornering loads, while minimizing potential performance enhancements.

May 2012

ITEM 14) Modify 14.10.E:

1) Remove the words “high flow” from the first sentence.

2) Add new sentence:

*Replacement converters must have a minimum catalyst density of 100 cells per inch and minimum substrate length of 3 inches***.**

Comment: This more clearly defines a catalytic converter and specifies a minimum level of functionality. It should have no effect on existing installations of legitimate automotive converters.

May 2012

ITEM 15) Replace 14.10.J:

Any engine or transmission mount is allowed provided it attaches only to the original mounting points, does not relocate the engine/transmission (other than incidental to changes in compliance material), and weighs no less than the OE mount. All components between the engine/transmission and the mounting structure are considered to be part of the mount assembly.

Also remove 14.8.E and re-letter subsequent sections accordingly.

Comment: The existing allowance attempts to retain bushing compliance through an ineffective restriction on metal content. Mounts of a solid nature can still be legally fashioned from hard plastic (e.g., Delrin). The proposed allowance replaces that ineffective restriction with one that instead limits weight reduction benefits.

February 2012

STREET PREPARED CATEGORY

ITEM 16) Add new subsection 15.2.A.1:

Hardware may be added to the steering system outside the passenger compartment to limit steering travel, provided it does not alter steering or suspension geometry within the limited range of motion and serves no other purpose.

August 2012

ITEM 17) Change 15.2.B:

Factory rub strips, emblems, mud flaps, *rear wings or rear spoilers* may be removed.

Comment: This is a portion of the “Option 2” proposal, which is not being recommended in its entirety. Member input on both sides of the Option 2 discussion indicated support for this specific item. As most cars in SP have the option to remove wings via update/backdate, this change will not affect very may vehicles.

June 2012

ITEM 18) Remove the fourth sentence from 15.2.I:

“The intent of this allowance is to accommodate commonly available appearance kits, and replicas thereof, which have no significant aerodynamic function at Solo speeds.”

Comment: This retains current aero allowances, and removes the ‘intent’ wording.

June 2012

ITEM 19) Add to 15.9.F:

A hole may be drilled in the firewall to permit passage of electrical wiring. It should be no larger than necessary and shall serve no other purpose.

October 2011

ITEM 20) Change 15.10.J:

Engine *and transmission* mounts may be replaced, but must attach in the factory location(s) without additional modification or changes. Engine position may not be changed. Hydraulic shock type rear engine locators, or bobble struts, may be replaced by manufacturer's performance part or aftermarket replacement part. This part must retain factory dimensions and attachment points, including factory design. (Example: If factory locator/bobble strut is gas or hydraulic piston type, replacement part must be gas or hydraulic piston type.) If one or more non-OE engine *or transmission* mounts are used, 15.10.K does not apply and a torque suppression device may not be used.

Also delete 15.10.N

February 2012

ITEM 21) Change 15.10.AA:

AA. Camshafts and related parts must remain standard except that alternate cam drive pulleys or gears may be used to adjust cam timing if no variable cam and/or valve timing system exists as standard. ***Timing covers or valve covers may be altered for pulley clearance or access to adjustment.*** Type of cam drive (chain, belt, gear) must remain as standard. Alternate parts of the same general type (e.g. roller chain in place of "silent" chain) may be substituted. Mating parts (block, heads, covers, retainers, etc.) may not be altered *except as mentioned above*. Vehicles equipped with a variable cam and/or valve timing system as standard may use alternate computer calibration to adjust cam and/or valve timing but may not change or substitute cam drive components (hardware).

October 2011

ITEM 22) Add new subsection 15.10.CC:

CC. Cruise control systems may be removed in whole or in part.

June 2012

ITEM 23) Move to FSP from DSP:

Honda
Prelude (1983-1987)
Prelude (1988-1991)

September 2011

ITEM 24) Move to DSP from CSP:

Toyota
Supra (1979-1981)

October 2011

ITEM 25) Change Impreza listings in DSP:

Subaru
Impreza *(1993-2001) (all)*
Impreza 2.5 (*NOC)*

Also remove from FSP:

Subaru
Impreza NOC

January 2012

ITEM 26) Change the ESP listing under BMW from:

528, 530, & 533 (all)

to

528, 530, & 533 *(non-turbo)*

June 2012

ITEM 27) Move to DSP from BSP:

Mazda
RX-8

June 2012

ITEM 28) Change the DSP and FSP listings for the affected BMW, Chevrolet, Ford, Mazda, Toyota, Volkswagen models:

In DSP:
BMW
318 (16v) & 325 (E30 chassis)

In FSP:
BMW
318i (8v, E30 chassis)
318i, 318is (E36 chassis)
Chevrolet, Pontiac, Buick, Oldsmobile, Geo, & Suzuki
Storm *(all)*
Ford
Focus (all) (1999-2007)
Fiat *& Bertone*
X1/9 (all)
Mazda
323 non-turbo *(1986-1989)*
323, *Protege*, *MX-3 4 cyl. (1990-1994)*
Protege *(1995-1998)*
Toyota
Corolla *FX16*
Corolla GTS *(all) (1984-91)*
Volkswagen
Rabbit, Jetta, Scirocco, Cabriolet, & Pickup (*all*, A1 chassis) (1975-1992)
Golf & Jetta (*all*, A2 chassis)
Corrado (all)
Golf & Jetta (VR6, A3 chassis)
Golf & Jetta (VR6 NOC, A4 chassis)

July 2012

STREET MODIFIED CATEGORY

ITEM 29) Replace 16.1.I:

Front hoods (engine covers), engine covers, trunk lids and hatches not containing glass, front fenders, rear fenders not part of chassis structure (unibody), front & rear fascias, and side skirts may be modified or replaced, and may be attached with removable fasteners. Associated hardware including latches, hinges***, and hood liners may be modified, removed, or replaced. The window washer system*** may be modified, removed or replaced.

July 2012

ITEM 30) Replace 16.1.N:

N. ***Removable OE hardtops,*** T-Tops, targa tops, sunroofs, moon roofs, and similar roof-mounted panels may be removed/replaced with alternate panels provided that the area of interface is limited to the original perimeter of the t-top, sunroof, etc. or utilizes the OE panel mount points, and that the contour of any replacement panel surface does not vary from the contour of the part being replaced by more than 1 inch in any direction. The material used to construct the alternate panel and the method used to attach it to the interface is unrestricted. Any actuation mechanism and the associated wiring, if any, may be removed. *Vehicles utilizing alternate (non-OE) hardtops will be considered as open cars in regard to Section 3.3.1*

July 2012

ITEM 31) Remove Section 16.3.

Note: This section was provided when the SM category was first created, and is no longer viewed as specifically necessary since the category and its rules have matured.

May 2012

ITEM 32) In Appendix A, Street Modified, remove the word "Supplemental" from the Street Modified Class Front Wheel Drive section heading.

November 2012

PREPARED CATEGORY

ITEM 33) Add to 17.2.P:

3. All OE rear wings and rear spoilers may be removed.

4. Vehicles equipped with an OE rear wing may add a rear spoiler only if the OE wing and wing attachments are first removed.

April 2012

ITEM 34) Replace 17.8.C.2:

The steering column is unrestricted. A collapsible type steering column having a layout and design and/or a column structure with impact and energy absorbing characteristics is strongly recommended.

July 2012

ITEM 35) Revise the 4th paragraph of Appendix A.1.c. for X Prepared:

Wing endplate surface area is limited to 200 square inches each and the number of endplates is limited to a maximum of two. Convertibles/roadsters with no roof and targas with no rear window, no portion of the wing may be higher than 12 inches above the wing's point of attachment to the body of the vehicle. *In the event that a convertible/roadster with no roof or a targa with no rear window retains the original equipment windshield frame with a windshield of any material that meets 17.2.K.1, the top of the windshield frame shall be considered top of the roofline and the car may use the wing mounting rules in Appendix A.1.c for a closed car.*

Comment: The intent of this proposal is to increase the allowable wing height for open cars with full windshields.

February 2012

ITEM 36) Add the following Appendix A, Section 9 for X Prepared:

c. Regardless of the Minimum Weight Calculations above, no car with a turbocharged or supercharged engine shall weigh less than the following Minimum Weights:

RWD: 1,700 lbs

FWD: 1,575 lbs

AWD: 1,825 lbs

Also add the following to Appendix A, Section 1 for X Prepared:

h. Minimum track width of 55 inches

Comment: The intent of this proposal is to ensure the continued popularity of XP by limiting participation to vehicles above specified weight and width minimums. This proposal replaces the minimum weight proposal for XP originally published in the February 2012 Fastrack.

July 2012

ITEM 37) Replace the fourth and fifth paragraphs under Prepared Class C in Appendix A:

Naturally aspirated cars with US produced 4-cyl, 6-cyl, and 8-cyl engines manufactured by a particular corporation may be interchanged with any pushrod, DOHC, or SOHC engine offered by that corporation. Examples of swaps allowed include a Chevrolet engine would be allowed in a Pontiac, a "Coyote" 5.0L would be allowed in any year Mustang, an LS1 would be allowed in any year Camaro or Firebird, and a 3.7L DOHC V6 from a 2011+ Mustang would be allowed in any other Mustang. Alternate engines for a particular model must locate the bell housing to the block mounting surface in the same plane as the standard part. Vertical position of the longitudinal axis of the crankshaft shall remain the same as the original engine. Tolerance for both measurements is +/- 1/2 inch. Alternate material (aluminum) engine blocks may be used on U.S. produced 8-cyl engines. Any alternate engine block shall meet all other requirements of Section 17.

Forced induction cars may not substitute the engine for any other nor may forced induction engines be swapped into cars that the combination was not offered."

Also change the subsequent paragraph:

Alternate iron or aluminum cylinder heads may be used on US-produced 4-cyl, 6-cyl, and 8-cyl engines. Any alternate cylinder head(s) used shall be *of the same configuration (number of valves per cylinder and valve actuation method – pushrod or OHC) as the originals and shall be direct replacement type.*

June 2012

ITEM 38) Add to Appendix A for C Prepared:

Traction control/stability control may not be added to a car which was not equipped with an OEM traction/stability control system. OEM systems may be retained, but may not be replaced or modified in any way other than deletion.

Comment: The intent of this proposal is to explicitly prohibit non-OE traction/stability control systems in C Prepared.

July 2012

ITEM 39) Change the listing in EP for the Mazda RX-4:

RX-4 (12A) (1974-78)

Specified Displacement: 2292 cc

Alt Spec: No peripheral port

Sedans (non-turbo, 2WD, NOC)

Also create a new listing for the Mazda RX-4 in FP:

RX-4 (13B) (1974-78)

Specified Displacement: 2616 cc

Alt Spec: No peripheral port

Comment: The PAC feels the 13B rotary may be outside the engine power envelope of EP. There are no 13B-powered cars currently competing in EP and therefore this class change would not disenfranchise existing competitors.

June 2012

ITEM 40) Change the Appendix A listing for the Toyota Starlet in EP:

Starlet (non-turbo, 2WD) (1981-1984)

Alt Engine: 4A-G (1.6L) with cyl. head P/N 11101-16010, or 11101-16030

Comment: The proposed change eliminates a potential engine/cylinder head configuration that was not available in RWD Toyota models.

February 2012

MODIFIED CATEGORY

ITEM 41) Add new section 18.1.D.6:

6. Turbocharging and supercharging are permitted for all engines, subject to the displacement factor of 18.0.C. In class D Modified, such induction systems must have a restrictor on the inlet side of the turbocharger/supercharger. All inducted air must pass through this restrictor, which must be constructed of metallic material. The minimum orifice (choke) diameter of the restrictor shall be no greater than 33mm. The restrictor passage may be shaped fore and aft of the choke region. The restrictor choke region must be made of one piece, without moving parts.

July 2012

ITEM 42) Replace subsection C, Modified Class F in Appendix A:

C. Solo Vee as per the following definition: Solo Vee is based on FV and all cars shall meet all specifications described in Sections 9.1.1.C.1, C.2, C.3, C.4, C.6, C.7, C.8, C.9, C.10, C.11 and C.12 of the GCR/FCS except as amended in these rules. No permitted or alternate component or modification shall additionally perform a prohibited function.

1. Engine Choices

a) Any stock 1600cc or smaller air-cooled automobile engine manufactured by Volkswagen (VW) for sale in VW vehicles available to the general public for purchase in the US is allowed.

b) Solo Vee engines may have increased compression up to and including 10:1 ratio with OE bore and stroke. Compression ratio may be increased by additional machining of any factory machined surface on the cylinder heads only. Fuel injection is prohibited. Valve size may be increased to a maximum of 40 mm intake and 35.5 mm exhaust. Port location may not be changed from OE stock. Machining of any type in the combustion chamber such as, but not limited to, valve unshrouding, is prohibited. Valve guide centers shall remain OE stock. OE stock heads shall be used, however, alternate VW heads with casting numbers 040 101 355 or 043 101 375 may be substituted. Any single carburetor (regardless of the number of venturis) is permitted. Multiple carburetion is restricted to a maximum of two 44mm carburetors with 28mm ventures. If a balance tube is used between manifolds runners, it shall be restricted to one 1/2-inch ID pipe. Any intake manifold not having a plenum chamber is permitted.

OR

c) Increase bore up to and including 94 mm maximum per cylinder, total displacement of 1915 cc. Machining to allow the installation of the cylinders is permitted. No other combustion chamber machining such as, but not limited to, unshrouding of the valves, is permitted. Valve guide centers must remain OE stock. Increased displacement engines up to 1915 cc are restricted to maximum valve sizes 39 mm intake and 32 mm exhaust. Port location may not be changed from OE stock. OE stock heads shall be used, however, alternate VW heads with casting numbers 040 101 355 or 043 101 375 may be substituted. A maximum compression ratio of 9:1 is permitted. Compression ratio may be increased by additional machining of any factory machined surface on the cylinder heads only. Any single carburetor may be used. Multiple carburetors are prohibited. Any intake manifold not having a plenum chamber is permitted.

d) There shall be no “mixing” of allowances, e.g. carburetors from “c” and displacement from “b” above.

2. Engine Components

a) Mixing of parts between different air cooled engine models is permitted. All parts must meet VW specifications for engines delivered for use in the US in VW vehicles unless otherwise noted herein.

b) Balancing of all moving parts is permitted provided balancing does not remove more material than necessary to achieve balance.

c) Parts from alternate manufacturers or remanufactured parts are permitted provided said parts are of the same material, are dimensionally identical, and meet all original VW specifications for engines delivered for use in the US in VW vehicles. This would include VW replacement heads as specified without raised ports and aluminum engine cases. Aftermarket magnesium engine cases may also be substituted.

d) The flywheel from either the alternate engine or from the 1200cc engine may be used. Minimum flywheel weight is twelve (12) lbs. Any single disk clutch may be used. The transmission housing may be machined to provide clearance when using the alternate engine flywheel assembly.

e) Any exhaust system which terminates more than three inches behind the rearmost part of the body may be used.

f) Counterweighted crankshaft and eight-dowel pinned crankshaft-to-flywheel mounting are allowed. All journal dimensions and relationships with each other must remain as stock. Crankshaft journals may be ground undersize a maximum of 0.030” less than stock dimensions. Crankshaft pulley is unrestricted.

g) Deep sump oil pan up to 2.5 quart additional capacity is permitted. The installation of baffles housed completely within the oil pan and crankcase is permitted. The use of any standard VW oil pump is permitted. Dry sump systems are prohibited. Replacement of oil gallery plugs with threaded plugs is permitted. Oil filters and oil coolers are unrestricted provided that they are securely mounted completely within the bodywork. A pressure accumulator (e.g. Accusump) may be fitted.

h) Camshaft and valve train components are unrestricted with the following exceptions:

1. Pushrods shall be made of metal.

2. Valve lifters (tappets) shall be dimensionally and functionally identical to and made of the same material as the standard VW parts.

3. Roller camshafts are prohibited.

4. Rocker arms shall be standard ratio VW.

5. Valve guide material is unrestricted provided that the distance between valve centers and the angles of the valves does not change.

i) Porting, polishing, and machining of the intake and exhaust ports is permitted. The addition of material in any form is prohibited. Valve seat angle(s) are unrestricted.

j) Compression ratio may be increased by additional machining of any factory machined surface on the cylinder heads only. Installation of a spark plug hole repair utilizing standard thread repair methods (such as Helicoil) is permitted providing that the spark plug centerline is not changed.

k) Complete or partial removal of any cooling duct component. Removal of the fan and the fan housing is permitted. Any electric fan is permitted for cooling the engine or engine oil.

l) Voltage regulator, generator, and/or generator stand may be removed.

m) One or more batteries may be used.

n) Any ignition system that utilizes a distributor for spark timing and distribution may be used. Distributor shall require no modification to the engine for installation. Internal distributor components and distributor cap may be substituted.

o) Valve covers are unrestricted and may be bolted on.

3. Transaxle

a) Aftermarket shift forks/shift rod/mounting parts and alterations required for their installation is permitted with the intent of facilitating reliable H-pattern shifting.

b) This allowance does not include sequential shifting (push button or single axis lever movement) mechanisms or

electric/gas assist. Cable/hydraulic actuating mechanisms are allowed.

c) A device for locking-out reverse gear may be used.

d) A limited-slip differential (LSD) is permitted.

4. Bodywork

a) Bodywork to the rear of the main roll hoop may be removed.

5. Front Suspension

The front suspension shall be standard VW Type I sedan H-beam front suspension (i.e., link pin or ball joint) or an exact replica of one of them and dimensionally identical. Aluminum H beams are prohibited. The following modifications are permitted:

a) Lugs may be welded, brackets attached by welding or otherwise, and holes drilled in the H-beam to permit attachment of the beam to the chassis, and components wholly or partially to the beam. Brackets may be welded to the torsion arms for the sole purpose of actuating the shock(s) and/or external mounted anti-roll bar and shall perform no other functions.

b) Open springs. Torsion bars may be used in conjunction with coils or may be removed entirely. Coil-overs are permitted.

c) Removal of the shock towers above the upper H-beam tube centerline.

d) Relocation of the shock dampers is permitted. Shock dampers and their actuation are free.

e) The use of any anti-roll bar or bars, internal or external, mounting hardware, and trailing arm locating spacers. The anti-roll bar fitted as part of the standard suspension may be removed. Anti-roll bars may not be cockpit adjustable.

f) Replacement of torsion bar rubbers with spacers of another material.

g) Installation of any ride height adjuster(s) is allowed.

h) Removal of the drum brake backing plates is allowed.

i) In the link pin suspension, non-standard offset link pin bushings may be used in order to obtain desired negative camber. Clearancing of carrier or trailing arm to prevent binding is permitted. The rubber portion of the bump stop may be removed. Caster, camber, toe-in, and link pin inclination are free.

j) In the ball joint suspension, the camber/caster adjusting nut may be replaced with an aftermarket nut of different design. Caster, camber, and toe-in are free.

k) Any wheel bearings that fit the VW sedan spindles and brake drums or disk brake hubs without modification may be used.

l) Steering column may be altered or replaced. Steering wheel is free and may be detachable. Steering mechanism is free but tie rods must attach to the spindle using existing steering arm, a modified steering arm, or a suitable new or modified bracket welded to the spindle. Ball joints in the tie rods may be replaced with rod ends.

6. Wheels

a) Any wheels and tires are allowed. Resulting track changes are allowed. Studs may be substituted for wheel attachment bolts in the original location.

b) 4 or 5 lug wheel hubs may be used. Wheel mounting lug bolts may be replaced with studs.

7. Rear Suspension

a) The rear axle and tube assembly shall be standard VW Type I up to 1966, sedan swing axle (no outer pivot point for a half shaft) with axle location provided by a single locating arm on each axle. The rear axle tube may be rotated about its axis. The standard shock mounting and brake pipe brackets may be removed.

b) The rear axle bearing retainer flange mating surface may be machined or shims may be installed under the rear axle bearing for the sole purpose of adjusting bearing axial float.

c) Springs, shock dampers, their actuation, and camber compensating devices are free.

8. Braking System

a) Standard VW Type 1-3 brake components, disk or drum, may be used including any standard VW Type 1-3 original. Use of aftermarket hubs, disc or drum brake components in the front or rear of the vehicle, or any combination thereof is unrestricted as long as the units chosen are deemed safe.

b) Caliper housing material may be removed on the outer radius surface of the outer piston housing to clear the inside of the rotating wheel.

c) Any type lining or pad material may be used.

d) Adapter plates may be fitted to allow mounting of front or rear brake calipers.

e) Cross-drilling or grooving of rotors is permitted. Rotors made of a ferrous material shall be used on both the front and rear of the car.

f) Caliper mounting is free. Rotors must be of ferrous material. Hubs and hats may be made of ferrous material or aluminum.

The allowances above apply to front and rear brakes.

g) The car shall be equipped with a dual braking system operated by a single control. In case of a leak or failure at any point in the system, effective braking power shall be maintained on at least two wheels.

h) A separate hand brake is not required. Removal of the hand brake and operating mechanism is permitted.

i) Brake lines may be of any suitable material, including steel braided lines.

9. Weight

a) Minimum weight is 1000 lbs with driver.

Also add in Appendix A, Modified Class F, subsection A, a new subsection 9 (to retain the allowance which is no longer contained in the above restructure):

9. Electric radiator/engine cooling fan(s) may be installed.

Comment: The intent of this rewrite is to eliminate redundancies and to organize the rules so the reader can easily find things. Minor changes have been introduced to bring the original rule set, written over 15 years ago, and the updated rule set, introduced 5 years ago, into harmony.

- The engine rules are now contained in two categories: “Engine Choices” and “Engine Component Allowances”. Valve sizes and carburetor choices, which are in two places in the current rules, are now found in a single location.
- Weight minimum is now in its own category. In the current rule set it is included in the definition of the category.
- All sub-categories have their own section.
- There was minor rewording of rules (particularly of the disc brake rule) to improve clarity. (The current rule--D.3.f.--refers to rear brakes. The proposed rule set clarifies the disc brake rule to include front and rear brake systems.)
- The current Solo Vee rules included an allowance for radiator fans for F500s (as well as Solo Vees). If this reorganized rule set is adopted, a radiator fan item will be added to the F500 section.

January 2012

ITEM 43) Relocate/modify sections pertaining to Solo Vees:

- Move subsection B from Modified Class F into Modified Class C.

- Move subsections C, D, and E from Modified Class F into Modified Class C.

- Remove the “Solo Vee” under subsection F, Modified Class F, and create a corresponding item under the Solo Vee rules as moved into Modified Class C.

Comment: This version of the proposal makes no changes to existing Solo Vee preparation allowances. The MAC

neither intends nor expects the competitive position of the FF platform to change with this move. This revised form of the proposal was provided to address concerns with the original which were expressed by the membership.

October 2012

Appendix B: CRB RECOMMENDED RULE CHANGES

If approved, these rule changes will become effective 1/1/2013, unless indicated otherwise. The letter number, Fastrack month, author, and title precedes each proposed rule.

GCR

1. #6027 – (June Fastrack – Terry Ozment) Posting of Results

Change GCR 5.10.1: 5.10.1. Chief of Timing and Scoring

The Chief of Timing and Scoring (Chief of T&S) is responsible for accurately timing and scoring the event, specifically:

A. Recruiting, training, assigning, and supervising qualified personnel to time and score the event.
B. Providing the Chief Steward and the SOM any times and results they request.
C. Maintaining records of official times and lap charts for all competing cars.
~~D. Compiling and publishing the Official Results of all competitions; submitting copies of completed Official Results to the Race Chairman, to the SOM, the organizers, and the SCCA; and submitting complete Official Results (including qualifying) within 5 days to the Divisional Pointskeeper.~~
D. Compiling and publishing the Official Results of all competitions. By the end of the weekend's on-track activities, results must be available for all competitors and officials. These may be Provisional Results, particularly if there are pending protests or actions. (See also 5.10.4.) Results will be submitted to the Race Chairman, the SOM, the organizers, the National or Regional/Series Pointskeeper, and the SCCA. Uploading each session to MyLaps is strongly encouraged. Complete Official Results for a National race must be submitted within 2 days of the end of the event; results for a Regional race must be submitted within 5 days of the event. Every effort should be made to have Official Results ready to distribute by the end of the weekend.

Add to GCR 5.10.4: 5.10.4. Results

1. Provisional Results

A lap chart or a printout showing the order of finish and number of laps completed for each car shall be posted and titled as Provisional Results. The time of posting will be on the Provisional Results with the Chief of T&S's initials or signature, and a public address announcement will be made. *When there is a pending action for a particular race group, Provisional Results for that group may be distributed to officials and competitors in lieu of Official Results, with a notation printed stating the reason (i.e., pending outcome of action involving X class).*

2. Final Results

1. At the expiration of the protest period (30 minutes or the time stated in the Supplemental Regulations), Provisional Results may be considered final if Tech has cleared impound and the Chief Steward and/or SOM have no pending actions. The Final Results should be titled as Final or Official Results and shall include the following types of information: description of event, timing and scoring information, and driver information.

2. Official Results will be produced and distributed for a group with pending actions when the Chief Steward or Chairman SOM notifies the Chief of T&S that all actions and appeals are complete. The Chief Steward or Chairman SOM will inform the T&S Chief of any penalties when the group is declared final. The T&S Chief will distribute Final Results to the Race Chairman, the race organizers, the Chairman SOM, the SCCA, and the appropriate Pointskeeper.

Change GCR 3.7.2: 3.7.2. Results

The organizer is responsible to distribute results as follows:

~~A. Printed, photocopied, or electronic Official Race Results sent to the National Office within 5 days of the event.~~
~~B. For National races, 1 printed or photocopied or electronic copy of Official Qualifying Grids and Race Results sent to the appropriate Divisional Pointskeeper(s) within 5 days of the event.~~
~~C. P~~ printed or photocopied Official Race Results available for each entrant at the event; or mailed at the organizer's expense or emailed (at the entrant's option) within 7 days of the event, 7 days of the notification of any protest decision affecting Results, or 7 days of a Court of Appeals decision, whichever is applicable and whichever comes first.

2. #6259 – (June Fastrack – Club Racing Board) Retention of compliant parts in a mechanical protest

Replace all of 8.3.3.F: F. Preserving Evidence

~~All recorded evidence such as technical data, inspectors' reports, or measurements must be forwarded to the Club Office along with the bond. The Chairman SOM must assure that the chain of evidence is not broken by receiving and holding any parts surrendered by their owner for safekeeping pending appeal. The Chairman SOM has the authority to impound parts.~~

~~All impounded parts must be uniquely and identifiably marked when they are removed from the car. The parts must remain under the direct control of a licensed Tech Inspector or Steward until they are returned to the competitor or delivered into the direct control of a courier service for insured and traced shipping to the National Office for inspection, after which the parts will either be retained or returned to the competitor.~~

With: F. Preserving Evidence

1. *Documentation – all recorded evidence, such as technical data, inspectors' reports, or measurements must be forwarded to the Club Office.*
2. *Impounded parts*
   - *a. The Chairman SOM is authorized to impound parts.*
   - *b. The Chairman SOM must assure that the chain of evidence is not broken.*
     - *i. All impounded parts must be uniquely and identifiably marked when they are removed from the car.*
     - *ii. All impounded parts must remain under the direct control of a licensed Tech Inspector or Steward until they are returned to the competitor or are delivered by a licensed Tech Inspector or Steward into the direct control of a courier service for insured and traced shipping for third-party inspection.*
   - *c. At an event, components may be returned to the protestee under the following conditions without either party losing the right to appeal.*
     - *i. Both parties must agree in writing to the following:*
       - *1. The official measuring the part(s) is qualified.*
       - *2. The proper tool(s) was (were) properly used to take the measurement(s).*
       - *3. The measurements as documented are not contested.*
       - *4 .The three items above are not subject to appeal.*
     - *ii. Parts found non-compliant*
       - *1. Will be marked as such.*
       - *2. Will be retained by the SCCA.*
       - *3. May be the subject of appeal.*

3. #7532 – (June Fastrack -- Janet Farwell) Correction to Appendix C. Licensing Minors GCR 1.4.B.1
The National staff requested this modification to Appendix C Licensing Minors GCR - 1.4.B.1., as follows: Change Appendix C, 1.4.B.1.: 1. A completed Parental Consent, Release and Waiver of Liability, Assumption of Risk and Indemnity Agreement. This document must be filed ~~annually~~ *every two years* until the Minor achieves the age of majority in his state.

4. #7640 – (June Fastrack – SCCA Staff) Add Language that will allow delegating of signing off on logbook
Change GCR 5.9.2.B: B. Minimum Event Safety Inspection/*Logbook*-Tech Sticker
Following the Annual Technical Inspection, minimum inspection for each event requires reviewing of the current Vehicle Logbook *and signing off the logbook page for the event*. If it is in order, a Tech sticker is issued. *The Chief of Tech may delegate signing the logbook page and issuing the Tech sticker to any worker holding a current Regional Tech license or above.* The driver's safety equipment does not need to be re-inspected.

5. #7801—(July Fastrack – Betsy Speed) Use of #1 in national races
Thank you for your letter. Modify GCR 9.3.28.A: The numeral "1" shall be exclusively reserved for the current national champion in each class for national events. *The numeral "1" will be reserved until the end of the period for submitting advanced or pre-event entries, and then will be released.* If 2 or more national champions are entered in the same run group, the first to ~~register~~ *enter* shall have preference.

Add to GCR: 5.6. Registration assigns the car numbers for all cars entered in the event. *See 9.3.28.A.*

1. #7814 – (September Fastrack – Terry Ozment) Insurance Waiver for Alternate Driving Schools
Thank you for your letter. In Appendix C, add new item 2.7.E.5.d: *The driving instructor for the alternate school may witness participating student(s) sign the SCCA insurance waiver for that event.* Then change subsequent items in 2.7.E.5 from d., e., f., to: *e., f., and g.*

2. #7829 – (September Fastrack – Richard Templeton) Split Start
Thank you for your letter. Here is the recommended language which is intended to deal with the situation when a car in one segment of a split start cannot leave the grid when his segment is released but can begin before the next segment is released. This would enable that car to start at the back of his segment rather than having to wait until the end of the field.
In 6.5.2.D.6 add*: A driver in one segment who is unable to leave the grid when directed but is able to get underway before the first car in the next segment is released, may join the back of his segment at the direction of the Grid official. Otherwise, he relinquishes his grid position and will be held until the end of the last segment. For the purpose of 6.4. and 6.5.1., the field is defined as all segments.*

1. #7812 – (October Fastrack – Terry Ozment) Change in 15-year old Licensing
Change Appendix C, 2.6.B, D and E:

2.6 15 Year Old Novice Permits *and Licensing*

B. A 15 Year-Old Novice Permit will be issued in the form of a Novice Permit with a distinctive cover. It must be used for all driver school and regional race events until the driver reaches the age of 16. If the requirements for a *Regional or* National license are satisfied before the permit holder turns 16, the 15 Year-Old Novice Permit shall be returned to the Club Racing Office, with the appropriate license fee, to be replaced by a *Regional or* National license. If the requirements for a Regional license are not fulfilled by the time the driver reaches the age of 16, the 15 Year-Old Novice Permit shall be returned to the Club Racing Office to be replaced by a Novice Permit. Any successfully completed Driver Schools and races will be transferred to the Novice Permit.

D. At every driver school and every race *before the permit holder is licensed*, ~~the permit must be presented~~ *he must present the Novice Permit* to the Chief Steward before participating in any on-track session. The Chief Steward will complete the appropriate permit page at the end of the event.

E. At any event before the permit holder is licensed (school or race), the Chief Steward may recommend revocation of the permit.

2. #8702—(October Fastrack – Terry Ozment) Review of Annual Tech Timelines
Thank you for your suggestion. Delete from 5.9.2.C: C. Re-inspection
~~e. The Vehicle Logbook indicates no competition for 3 months or more during the current year;~~

3. #9046 – (October Fastrack – SCCA Staff) Require Minimum Windshield Thickness in GCR Section 9
Change GCR section 9.3.55 as follows: 9.3.55 *WINDSHIELDS*/WINDSHIELD CLIPS/REAR WINDOW STRAPS
Add a new first sentence as follows: *Polycarbonate windshields such as Lexan are allowed except in Improved Touring, Super Touring, American Sedan, Showroom Stock, B-Spec, Spec Miata, and Touring. Alternate windshields must be of 6mm minimum thickness.*

4. #8972 – (November Fastrack – Allen Davis) FIA Homologated Racing Seats
Thank you for your letter. Change GCR 9.3.41:

9.3.41. SEATS
The driver's seat shall be a one-piece bucket-type seat and shall be securely mounted. The back of the seat shall be firmly attached to the main roll hoop, or its cross bracing, so as to provide aft and lateral support. Seats ***that have been*** homologated to and mounted in accordance with FIA standard 8855-1999, or ***seats that have been certified to*** FIA.Standard.8862-2009 or higher need not have the seat back attached to the roll structure. Seats with a back not attached to the main roll hoop or its cross bracing may be mounted on runners only if they were part of the FIA homologated seats assembly specified in an FIA homologated race car. The homologation labels must be visible. Seat supports shall be of the type listed on FIA technical list No.12 or No. 40 (lateral, bottom, etc). Passenger seat back–if a folding seat, it shall be securely bolted or strapped in place.

FORMULA/SPORTS RACING: FF/FC
1. #5636 – (September Fastrack – Formula/Sports Racer Advisory Committee) FF/FC Rules Re-write and Combination
The FSRAC submits the rule set found at: http://www.scca.com/clubracing/content.cfm?cid=44472 as a proposed rule set for FF/FC in 2013. The CRB is actively seeking feedback on this proposed rule set. Please send all feedback through the CRB letter system at crbscca.com.

FA
1. #9030 – (October Fastrack – David Arken) FA Engine Table
The CRB recommends the following changes to the FA engine table based on member input the committee has received. Although the new engine table restricts the class to specific engines, the intent is not to eliminate any current engines in FA. Furthermore, the CRB recognizes the desire by some drivers to develop new engines for the class, and the CRB will consider all proposals for specific engine combinations that are submitted to the CRB on a case by case basis. The proposals shall include a proposed SIR and weight combination along with any data supporting potential horsepower and torque numbers for the specific engine.

Change 9.1.1.A.2.a.: a. Engines shall be derived from automobiles and may be prepared for competition in accordance with SCCA GT preparation rules, except as specified in the Table below. *OEM blocks and heads must be used except when noted in the FA Engine Tables.*

Change 9.1.1.A.2.b.19: 19. The compression ratio may be increased by machining, using any head gasket(s), or eliminating of head gasket(s), *unless otherwise noted in the FA Engine Table at http://www.scca.com/clubracing/content.cfm?cid=44472.*

S2
1. #8799 – (October Fastrack – Tony Sleath) Mazda Engine Rules Updates
Thank you for your letter. The CRB agrees that, since this class is part of the SR reorganization for 2014, these changes can be made for 2013. Change 9.1.9.B:

6. Engine (Mazda MZR)

b. Pistons, crankshaft, and connecting rods may be replaced only with standard, original Mazda production parts. The connecting rods may not be bored or remanufactured in any way. Standard oversize and undersize main or connecting rod bearings are permitted. Reduction of the width of the standard bearings is not permitted. Replacement main bearings must be standard Mazda or Cosworth KK3481. Replacement connecting rod bearings must be standard Mazda or Cosworth KK3483. *Any rod bolts may be used.*

e. Flywheel: The minimum weight is 5 pounds. Any *one piece flywheel may be used.* ~~weight removed from the flywheel must come from the clutch plate surface. Only the Mazda LFG2-11-500 ('05-'08), Mazda LF9G-11-500 ('09), Quartermaster 505307, or Cosworth 20001019 flywheels may be used.~~ *Flywheel bolts are free.*

i. Intake restrictor: 1.205 inch diameter restrictor plate per intake port. ~~The restrictor plates must be obtained from Quicksilver RacEngines or Elite Engines. The restrictor plates must not be modified in any way.~~

j. *Exhaust system and manifold are unrestricted, within SCCA safety regulations.* ~~The exhaust system manifold tubing inside dimension must be 1.625 inches, and the manifold tubes must be a minimum of 24 inches in length, terminating into a single exhaust pipe through a 4-into-1 collector. The collector angles must be 15 degrees (30 degree included angle), with an exit diameter of 2.250 inches. The tail pipe must be a minimum of 24 inches in length. The tail pipe includes a muffler, if present, as long as the inlet and outlet pipes of the muffler are the same diameter as the tail pipe. 4-into-2-into-1 exhaust collectors and reduced diameter venturi sections are prohibited.~~

GRAND TOURING: GT

1. #9327 – (November Fastrack – GT Committee) Engine Location Definition

In 9.1.2.F.4.e.13 add: 13. Engine and transmission mounts may be of alternate shape and/or material. Cars with engines mounted longitudinal to the chassis MAY relocate the engine in a longitudinal, not lateral, direction within the following restrictions: (Note: A tolerance of up to a 1.0 inch setback is allowed if the engine is relocated.) *OEM body-engine combinations run in their stock locations is allowed. Stock engine location is defined such that the forward-most spark plug is within 1.0 inch of the stock location compared to the front axle centerline.*

GT1

1. #7828 – (August Fastrack – Charles Wicht) Add 2" to the ACP Corvette front splitter.

Thank you for your request. In 9.1.2.E.1.c, add:** The front undertray and rear fascia and diffuser included in the ACP kit must be replaced with bodywork compliant with the GT1 rules.

****ACP C-6 Corvette bodywork only may add 2.0" to splitter length.*

Lumina (1990-) 106.0"
Monte Carlo (95-00) 103.0"/106.0"
Monte Carlo (01-02) 103.0"/110.0"
Monza 97.0"

2. #8176 – (August Fastrack – Cliff Ebben) Front Splitter

Thank you for your request. In 9.1.2.E.1.c, add:

MUSTANG (1999-2004) 100.5"
MUSTANG (bodywork) (05-10) 106.0/110.0"
*** ACP (2010) MUSTANG bodywork only may add 2.0" to the front splitter length.**

3. #8716 – (October Fastrack – Bill Rozmajzl) Allow aluminum V6 engine blocks.

Thank you for your request. Change 9.1.2.D.1.e.3: V-6 and V-8 General Motors engines are permitted: Buick, Chevrolet, Oldsmobile, Pontiac, *aluminum V-6 GM bow tie block,* Brodix, Brownfield, Dart, Edlebrock, Pro Action 14-degree, or Airflow Research 210, 215, 220, and 227 cylinder heads of cast iron or aluminum. All Pro cylinder head, part # 270-LM-13 is permitted Any cylinder head(s) utilized shall be of a conventional design (siamesed intake ports, two (2) valves per cylinder, all valves inline), direct replacement type. General Motors SB-2 cylinder heads are permitted.

GTL

1. #8749 – (October Fastrack – GT Committee) GTAC-GTLite Rule Change Proposal

The CRB recommends the following changes to the GTL Mini Cooper to improve the straight line speed performance. Add to the Notes on the GTL Cars - BLMI, Mini Cooper: *Full flat bottom floors are permitted. Rear valance panel may be removed or modified. Rain gutters may be modified.*

The CRB recommends the following in an effort to provide additional flexibility for participants running SIR engines: Add 9.1.2.F.4.k:

k. GTLite Rules Concerning Alternate Weights and SIRs

1. Allow currently restricted 2V and 3V engines <1400ccs to run unrestricted at a 100 lb weight penalty.
2. Allow all 2V and 3V restricted engines less than 1600ccs to run 1mm larger SIR as an option at a 125 lb weight

penalty.
3. Allow all 4V restricted engines less than 1600ccs to run 1mm larger SIR as an option at a 175 lb weight penalty.
4. Competitors running the alternate SIR must display "+1mm" on the side of their car next to their new weight.
5. Competitors running the unrestricted option must display "UNR" on the side of their car next to their new weight.
6. Limit compression ratio to 15:1 for SIR restricted engines effective 1/1/2014.

2. #8971 – (November Fastrack – Jim Zirkel) Allow Cross Flow Heads
Thank you for your letter. Insert spec line below into GTL CARS - BLMI, Engines - BMC thru Rover Group, between lines 6 and 7.

Engine Family	Engine Type	Bore x Stroke (mm)	Disp (cc)	Head Type	Valves / Cyl.	Fuel Induction	Weight (lbs)	Notes
	OHV	2.78 x 3.20 (70.6 x 81.33) alt. bore: 73.5 max. or 74.0 max.	1275 1380 1399	*Alumn. Crossflow*	2	*Unrestricted* *24.5mm SIR* *24.5mm SIR* *Unrestricted* *24.5mm SIR* *24.5mmSIR*	*1275@1650* *1380@1850* *1399@1889* *Sprite/Midget* *1275@1810* *1380@2010* *1399@2050*	*See all notes above.* *Pierce 7 port alum. crossflow cylinder head part #99003.849 is allowed.* *Mini Spares 8 port alum. Crossflow cylinder head part #C-AHT346 is allowed.*

IMPROVED TOURING: IT
1. #4220 – (June Fastrack – Tom Lamb) Evaporative Emissions Rules for Improved Touring
Thank you for your letter. Add new section: 9.1.3.D.1.b.1.: *1. Fuel system evaporative emissions systems may be removed or replaced. Use or addition of rollover spill protection (i.e. check valve) is required.*

2. #4407 – (June Fastrack – Chris Schaafsma) Allow removal of non-functional wiring
Change 9.1.3.D.10: 1~~0~~*1*. Safety (note that sections, a, b, c, d, should follow with the new Safety location). Insert: 9.1.3.D.10 *10. Electrical;* 9.1.3.D.10.a: *a. Wiring specific to any component permitted to be removed, or disabled, may be removed. Required wiring rendered redundant by allowed modifications (i.e. engine management harness) must remain.*

ITA
1. #9410 (November Fastrack – SCCA Staff) Re-Classify the Honda CRX 1.5L (Standard) (88-91) to ITB
Reclassify the ITA Honda CRX 1.5L (standard) (88-91) to ITB as classified in ITA with the following exceptions:

Weight: ~~2000~~ *2110*

Gear Ratios: ~~3.25, 1.65, 1.03, 0.82 or~~ *3.25, 1.89, 1.26, 0.94, 0.77*

SUPER TOURING: ST
1. #7824 – (June Fastrack – Marc Hoover) Vortex Generators
Thank you for your letter. Change 9.1.4.D.2.b as follows: b. Factory wings, and spoilers, *and roof vortex generators* are permitted, but must be removed if an approved aftermarket wing is installed.

2. #9412 – (November Fastrack – ST Committee) Change Weight/CC Chart in STU, STL
Change Weights and Engine Allowances in GCR/STCS (STL) 9.1.4.3.I:

Weights and Engine Allowances
Minimum weights for cars with normally aspirated piston engines will be determined by 1.35 lbs/cc displacement for the installed engine (see following table). Displacement is the factory displacement for the installed engine. *For the purpose of weight assignment, engine displacement will be rounded to the nearest 50cc (e.g., 2176cc = 2200cc and 2175cc = 2150cc).*

Factory Engine Displacement (cc's)	Minimum Weight in Lbs
1300	1755
1350	*1823*
1400	1890
1450	*1958*
1500	2025
1550	*2093*
1600	2160
1650	*2228*
1700	2295

1750	*2363*
1800	2430
1850	*2498*
1900	2565
1950	*2633*
2000	2700

Change Weights and Engine Allowances in GCR/STCS (STU) 9.1.4.2.I:

Weights and Engine Allowances

Minimum weights for cars with normally aspirated piston engines will be determined by 1.1 lbs/cc displacement for the installed engine (see following table). Displacement is the factory displacement for the installed engine. ***For the purpose of weight assignment, engine displacement will be rounded to the nearest 50cc (e.g., 2176cc = 2200cc and 2175cc = 2150cc).***

Factory Engine Displacement (cc's)	Minimum Weight Lbs
1600	1760
1650	*1815*
1700	1870
1750	*1925*
1800	1980
1850	*2035*
1900	2090
1950	*2145*
2000	2200
2250	*2475*
2300	2530
2350	*2585*
2400	2640
2450	*2695*
2500	2750
2550	*2805*
2600	2860
2650	*2915*
2700	2970
2750	*3025*
2800	3080
2850	*3135*
2900	3190
2950	*3245*
3000	3300
3050	*3355*
3100	3410
3150	*3465*
3200	3520

STU

1. #8975 – (September Fastrack – Club Racing Board) Adjust Lotus in STU (REC Portion of 8740)
In Table A. Alternate Vehicle Allowances, STU, for Lotus Elise SC1 Lotus Exige SC, change Notes: ~~Open pulley and injectors; OEM camshaft lift at 2400 lbs. Stock SC pulley, and injectors permitted at 2200 lbs.~~ *Minimum Supercharger pulley of 2.7" diameter is allowed.*

2. #9413 – (November Fastrack – ST Committee) Change Lotus STU Spec Line
Correct letter#8975 (September 2012 Fastrack): In Table A. Alternate Vehicle Allowances, STU, for, Lotus SC1/Lotus Exige SC, change Notes: ~~Open pulley and injectors; OEM camshaft lift at 2400 lbs. Stock SC pulley, and injectors permitted at 2200 lbs.~~ *Minimum ~~Supercharger~~ 2.7" pulley ~~of 2.7" diameter is allowed~~, open injectors; OEM camshaft at 2400 lbs. Stock SC pulley and injectors permitted at 2200lbs.*

STL

1. #8756 – (September Fastrack – ST Committee) Disallow Compression Over 11:1 in STL (TB part is 8990)

Change 9.1.4.3.D.5: 5. Compression ratio is limited to 11.0:1. ~~If an STL-eligible car has an~~

~~OEM compression ratio higher than 11.0:1 the vehicle may retain~~

~~the OEM compression ratio.~~

2. #7717 – (November Fastrack – Corey Roun) Front Splitter
Thank you for your letter. Change the following in the GCR/STCS:
Delete 9.1.4.1.B.1 (STO splitter) entirely.
Delete 9.1.4.2.B.1 (STU splitter) entirely
Delete 9.1.4.3.B.1 (STL splitter) entirely.
Replace 9.1.4.D (STCS general section, Aerodynamic Devices) with the following:
D. Aerodynamic Devices
1. Front Air dam

a. A front spoiler/air dam may be added. It shall not protrude beyond the overall outline of the body when viewed from above perpendicular to the ground, or aft of the forward most part of the front fender opening.
b. The spoiler/air dam shall be mounted to the body, and may extend no higher than four (4) inches above the horizontal centerline of the front wheel hubs. The air dam shall have no support or reinforcement extending aft of the forward most part of the front fender wheel opening.
c. The minimum ride height of the air dam is 3.0 inches.
d. Openings are permitted for the purposes of ducting air to the brakes, cooler(s), and radiator(s).
2. Undertray
a. An undertray may be added. The undertray may close out the underbody from the leading edge of the approved bodywork (including air dam) back to the centerline of the front axle.
b. The minimum ride height of the undertray is 3.0 inches.
3. Splitter

a. Definition: A horizontal, single-plane aerodynamic device attached to the lower front of the vehicle, protruding forward. It is intended to divert air and produce downforce through vertical pressure differential. A splitter shall have no vertical deviations.

b. A front splitter may be added. A maximum of 4 rods or cables may be used to support the front and/or sides of the splitter. No other material(s) may be used external to the body to support the splitter.

c. The front splitter must not extend more than 2.0 inches past

the original or approved bodywork as viewed from above for

the entire profile of the splitter.

d. No part of the splitter shall extend laterally any further than the widest point of the outside sidewall of the front tires with the wheels pointed straight ahead.

e. The splitter may have vertical deviations, fences, etc., only if

they are part of the production bodywork for street use.

f. The minimum ride height of the front splitter is 3.0 inches.

Re-number "9.1.4.D.2. Rear Wing" to "9.1.4.D.4. Rear Wing" and retain verbiage as is.

PRODUCTION: HP
1. #8531 – (August Fastrack – Prod Committee) Competition Adjustment for 1.8 L 914
Thank you for your request. Increase valve lift to .450 for the 1.8 L Porsche 914.

AMERICAN SEDAN
1. #8415 – (July Fastrack – AS Committee) Proposed 2013 AS rules
The ASAC submits the rule set found at http://scca.cdn.racersites.com/prod/assets/Proposed2013ASRules.pdf as a proposed rule set for American Sedan in 2013. This rule set is re-organized for clarity and includes a complete set of rules for both Full Preparation and Restricted Preparation cars. The CRB is actively seeking feedback on this proposed rule set. Please send all feedback through the CRB letter system at crbscca.com. The goal of this effort is to not change existing Full Preparation rules (except for minor tweaks) but to introduce Restricted Preparation rules into the mainstream American Sedan rules package. Restricted Preparation cars will therefore no longer be tied to Touring rules.

2. #8416 – (July Fastrack – AS Committee) Proposed 2013 AS Specification Lines
The ASAC submits the specification lines found at http://scca.cdn.racersites.com/prod/assets/Proposed2013ASSpecLines.pdf as proposed specification lines for American Sedan in 2013. These specification lines go with the rule set attached in letter #8415. The CRB is actively seeking feedback on this proposed specification line set. Please send all feedback and suggestions through the CRB letter system at crbscca.com.

3. #8319 – (August Fastrack – John Blanchard) 1993-1997 Alternate Camshaft Kit
Add to Proposed Rule Specification lines located at: http://scca.cdn.racersites.com/prod/assets/Proposed2013ASSpecLines.pdf in the Notes section for Chevrolet/Pontiac Camaro and Firebird (93-97) Restricted Preparation: GM Performance Parts camshaft Kit P/N-12480002 is permitted.

4. #8955 – (October Fastrack – Ted Warning) Proposed 2013 American Sedan Rules Feedback
Thank you for your request. In 9.3.55, change: 9.3.55. WINDSHIELD CLIPS/REAR WINDOW STRAPS
Windshield safety clips and rear window safety straps shall be installed on all closed cars (except *American Sedan,* Showroom Stock, Spec Miata, Touring, Improved Touring, and Super Touring).
This will remove the requirement for window clips and straps for all American Sedan cars, as the CRB believes they are not

effective for American Sedan. Should this rule be approved by the Board of Directors, the proposed ruleset for American Sedan for 2013 will be adjusted to remove the reference.

SHOWROOM STOCK, SPEC MIATA, TOURING: None
GCR Recommended Rule Changes (4) for 2013 (in November Fastrack Minutes but not in Briefing Book)

ITEM 1
#9304 (Greg Amy) Change to Turbo Inlet Restrictor Definition
In Appendix F. Technical Glossary, change the definition of Turbo Inlet Restrictor (TIR):
Turbo Inlet Restrictor - A system to limit engine performance that meets these criteria. The inlet restrictor shall have a single, circular opening through which all inlet air passes. The **maximum ID of the restrictor** is listed on the vehicle's spec line. The restrictor's maximum ID must be maintained for at least 3 mm. **This 3 mm restrictor segment shall** be placed within 50 mm of the rotating section (impeller assembly) of the pressurizing unit. *On engines where the approved turbo prohibits meeting this distance, different locations may be approved by the CRB on a case by case basis. If an alternative location is approved, the entire restrictor assembly shall have a maximum length of 50 mm.* There shall be no other provisions for airflow to the turbocharger other than through this single orifice.

ITEM 2
#9517 (Club Racing Board) Approve STL as National Class for 2013
The CRB requests approval for STL to be a National Class for 2013.

ITEM 3
#9525 (Club Racing Board) Approve B-Spec as National Class for 2013
The CRB requests approval for B-Spec to be a National Class for 2013.

ITEM 4
#9524 (Club Racing Board) October 2012 Changes to Proposed AS Rules and Spec Lines
The below changes have been made (final set for the updated AS Rules and Spec Lines) at:
http://scca.cdn.racersites.com/prod/assets/Proposed2013ASSpecLines
Change Specifiation line for Chevrolet/Pontiac Camaro and Firebird (93-97) Restricted Prep.

Chevrolet/ Pontiac Camaro & Firebird (93-97) Restricted Prep.	101.1	2.97, 2.07, 1.43, 1.00, 0.80, 0.62 *or 3.36, 2.07, 1.35, 1.00, .80, .62*	12.2 x 1.27 Disc	*3200*	A .060 in. thick SIR may be added to maintain performance parity within the class. Max. Wheel Size: ~~16 x 8.~~*17 x9. Stock brakes must be retained when using authorized wheels larger than 16 x 8. Installation of ASedan specification brakes requires the use of 16 x 8 wheels. GM Performance Parts camshaft Kit P/N-12480002 is permitte*d.

Change Specification line for Ford Mustang Coupe GT (05-09) Restricted Prep.

Ford Mustang Coupe GT *4.6L* (05-~~09~~*10*) Restricted Prep.	107.1	3.38, 2.00, 1.32, 1.00, 0.68	(F) ~~335~~ *3 1 6 / 3 5 5* Vented Disc (R) 300 Vented Disc	*3250*	A .060 in. thick SIR may be added to maintain performance parity within the class. Max. Wheel Size: ~~17 x 9~~*18 X 9.5.* Stock brakes *or alternate Ford 14" Brembo Brake (Ford Racing Kit #M-2300-S)* must be retained when using authorized wheels larger than 16 x 8. Installation of ASedan specification brakes requires the use of 16 x 8 wheels. *Cold Air Intake, Ford Racing Part M-9603-M463 is permitted. Replacement exhaust manifolds, or "headers," may be used. Cylinder head mounting flange(s) shall be no thicker than 0.375 inch, and tubing diameter shall be no greater than 1.625 inch O.D., measured at any tube location one (1) inch from the flange to the collector*.

Classify Chevrolet Camaro SS (V8) (10-13) Restricted Prep. And Ford Mustang Coupe GT 5.0L (11-13) Restricted Prep.

Chevrolet Camaro SS (V8) (10-13) Restricted Prep.	*112.3*	*3.01, 2.07, 1.43, 1.0, .84, .57*	***(F) 355 mm X 32.1mm Vented Disc (R) 300 mm X 19.2Vented Disc***	*275 Tire: 3700 295 Tire: 3750*	*Max wheel size 20 X 10. Stock brakes must be retained when using authorized wheels larger than 16 X 8. Installation of ASedan specification brakes requires the use of 16 X 8 wheels. A single inlet restrictor 50 mm (max) X .60" +/- .005" is required, and must be placed in the front of the factory throttle body manifold opening. The plate must seal the opening so that all air entering passes through the restrictor.*
Ford Mustang Coupe GT 5.0L (11-13) Restricted Prep.	*107.1*	***3.66, 2.43, 1.69, 1.32, 1.00, 0.65***	***(F) 335/355 Vented Disc (R) 300 Vented Disc***	*275 Tire: 3600 295 Tire: 3650*	***Max. Wheel Size: 18 x 10. Stock brakes or alternate Ford 14" Brembo Brake (Ford Racing Kit #M-2300-S) must be retained when using authorized wheels larger than 16 x 8. Installation of ASedan specification brakes requires the use of 16 x 8 wheels. 50 mm flat plate restrictor require***d.

Make the following changes at: http://scca.cdn.racersites.com/prod/assets/Proposed2013ASRules.pdf

9.1.6.D.3.b: Restricted preparation cars only:

4. ~~OEM driveshafts must be utilized~~. *OEM driveshafts may be replaced with any one piece driveshaft of steel or aluminum construction.*
5. ~~OEM or factory equivalent u-joints must be utilized.~~
6. ~~Balancing of the driveshaft is permitted. Removal of material solely for the purposed of balancing is permitted.~~
~~7~~*5.* Driveshaft loops are permitted/recommended.

9.1.6.D.7.d.5:

5. *Steel, aluminum, or* fiberglass hoods ~~including cowl hoods up to 3"~~
~~may be used~~ *may include a sealed protrusion above the hood's external profile not to exceed 3 inches in height.* Otherwise the external profile of the hood shall remain stock.

Appendix C: 2013 Proposed Touring and B-Spec Rules

The current classes, STO, T1, T2, T3, SSB, SSC and B-Spec, have been reworked for the 2013 season. These seven classes will become five: T1, T2, T3, T4 and B-Spec. The CRB knows that there will be people racing in January and that the final rule sets are coming together rather late in the season. Due to the input from the T1 community, the tent meetings and multiple face-to-face meetings between these racers and the members of the CRB and the Touring Advisory Committee, we have revised the proposed T1 rules and now have a solid proposal for 2013. T2, T3 and T4 are essentially as published in the May Fastrack and approved, in principal, by the Board of Directors in June (published in the July Fastrack). B-Spec has been broken out of the T4 class and will race under the current rules, with some slight adjustments.

Touring 1 – All current T1 cars will be able to race in the new T1 without modification. They will be allowed to make additional modifications for 2013, but those modifications are not required. T1 will run basically under the current STO rules, with different weights and restrictors designed to slow the current STO cars to T1 speed. These weights and restrictors are based on data and computer modeling, and will be modified as the season progresses. Current STO cars will be allowed to either add restrictors and weight, or move to appropriate GT classes. The GT Advisory Committee is ready to class and welcome those cars in competitive trim.

Current T1 cars will also have the option of accepting restrictors and/or weight and other modifications (such as the removal of headers) to race in the new Touring 2 class.

A. Bodywork

1. OEM non-metallic composite body panels (i.e., plastic fascias, fiberglass hoods, etc.) may be replaced with panels of any type composite, provided that the panel maintains the OEM profiles. All cars may replace the hood, hatch, and/or trunk/deck lid with nonmetallic composite parts. The hood may have heat exhaust vents installed in it. Hood inlets (scoops) are not allowed. The vents shall not expose the mechanical components of the car when looking down from above. The permitted transmission and differential coolers may vent through rear license plate frame. There shall be a screen, painted the same color as the surrounding bodywork, covering the vent opening. Any OEM non-functional, decorative vents/ducts may be made to be functional provided the exterior body appearance is not modified.
2. Standard body appearance must be strictly maintained. Standard body appearance includes the OEM grille and badge. A photographic replica is not sufficient.
3. Body and frame seams and joints may be welded. The OEM radiator supports may be replaced or reinforced to make repairs easier. The radiator supports shall not reinforce the rest of the chassis or diminish the OEM crush zones.
4. Bumper brackets may be modified, but bumpers must remain in OEM locations.
5. Non-essential body items and trim may be removed including attaching brackets and supporting structure. Any holes in bodywork exposed by the removal of these items shall be covered or filled.
6. All of the vehicle's doors must be able to be opened from both inside and outside the vehicle. Latches and hinges for the doors may be modified, but must remain in working order. Aftermarket latches and hinges may be used but shall not protrude beyond outer surface of bodywork. The stock side impact beams may be removed when NASCAR style door bars are installed.
7. Hood and trunk pins, clips, or positive action external latches are permitted. Stock hood and trunk latches and hinges may be disabled or removed; if so, a positive action external fastening method shall be used. Engine compartment insulation may be removed.
8. Openings in the bodywork may be temporarily covered, wholly or partially, with tape for the purpose of regulating airflow. Bodywork openings may be closed off using close-out panels mounted behind body openings. Bodywork seams may not be taped except to temporarily secure it after contact.
9. All bodywork and windows shall be sufficiently rigid, adequately supported and properly secured such that it does not noticeably flutter, move, or deform while vehicle is in motion.
10. Aftermarket OEM style hardtops are allowed. Aftermarket carbon fiber hardtops are not allowed.
11. Fenders and wheel openings shall remain unmodified. It is permitted to roll under or flatten any interior lip on the wheel opening for tire clearance. Cars with plastic/composite fenders may remove any interior wheel opening lip, but the resulting material edge shall be no thinner than the basic fender material thickness. Non-metallic inner fender liners may be removed.

B. Aerodynamic Devices

1. Front Splitter

   a. A front splitter that is a flat, single-plane may be added. The splitter shall have no vertical deviations. The permitted splitter may close out the underbody from the leading edge of the approved bodywork, back to the centerline of the front axle. The splitter may be mounted to the front fascia via a vertical intermediate mounting surface. If the vertical mounting surface overlaps the front fascia, it may not overlap more than 2.0 inches. Additionally, a maximum of 4 rods, or cables, may be used to support the front, and/or sides, of the splitter. No other material(s) may be used external to the body to support the splitter. A single-plane vertical close-out panel(s) may be used to bridge the gap between the front fascia and the splitter. Splitter designs may incorporate openings for brake ducts provided it does not affect the standard body appearance.

b. The minimum ride height of front splitters and air dams is 3.0 inches.

c. The front splitter must not extend more than 2.0 inches past the original or approved bodywork as viewed from above for the entire profile of the splitter.

d. The splitter shall not extend laterally any further than the widest point of the outside sidewall of the front tires with the wheels pointed straight ahead. The splitter may not extend more than 2.0 inches beyond the bodywork, regardless of where the outside edges of the front tires are.

e. The splitter may have vertical deviations, fences, etc., only if they are part of the production bodywork for street use.

f. Cars with non-OEM front splitter shall increase the required minimum weight by 75 lbs.

2. Rear Wing

a. The wing shall be mounted to the trunk/deck lid with 2 mounting brackets. Each mounting bracket shall attach to the wing at a point that is at least 2.0 inches inboard of endplates. The wing, and the portion of the mounting brackets located externally to the trunk/deck lid, may only be reinforced by a diagonal strut having no aerodynamic effect, and/or by affixing the external parts of the brackets to internal parts of the brackets within the trunk/cargo area. The internal parts of the brackets may protrude through the trunk/deck lid to allow the two parts of each bracket to be fastened together.

b. Factory wings and spoilers are permitted, but must be removed if an approved wing is installed.

c. Wings shall be a single element with a maximum chord length of 12.00 inches, including any wicker.

d. The entire wing assembly may be no wider than the widest part of the car, not including fender flares/lips and mirrors, or a maximum width of 72.0 inches, whichever is the lesser.

e. The entire rear wing assembly, including the end plates and any wicker , shall be mounted level with, or below, the peak of the roof.

f. The trailing edge of the rear wing may be mounted no further rearward than the center of the rearmost part of the approved bodywork.

g. Wing end plates must not exceed 144.0 square inches.

h. APR performance wing GTC-500 part #AS-1070xx, variable cord length 12.75” Inner/9” Outer), is permitted.

i. Cars with non-OEM rear wing shall increase the required minimum weight by 75 lbs.

3. A close-out panel may be mounted behind the grille.

4. OEM side skirts may be used if they were available on the car from the dealer provided they meet the minimum ride height rule.

5. Aftermarket side skirts may be used provided they meet the minimum ride height rule, have no openings/ducts in them other than for jacking insert(s), are no wider than the approved fascias, do not extend any higher than the bottom of the door and do not reinforce the chassis.

6. Canards or dive planes are not permitted unless part of the OEM bodywork

C. Interior

1. The following items may be removed: tool kit, spare tire, supplemental restraint systems (SRS) and passive restraint systems.

2. The following items may also be removed:

   Headliner, sun visor, carpeting, carpet pad and/or insulation, soundproofing, OEM seats, all trim except the dashboard, heating and air conditioning systems, window winding mechanisms, central locking systems, audio system, and any other systems fitted to the original car solely for the comfort of the driver and/or passengers.

3. The following items may be installed:

   Safety equipment/structures, seat, controls necessary for driving, instrumentation, electronic equipment, radio, camera, battery, driver cooling system, driver ventilation system, replacement door panels/interior trim, anti-sway bar controls (not within reach of driver). None of the above items may hinder driver exit from the car.

5. The driver’s seat shall be located in the same lateral location as the OEM seat, unless otherwise allowed on a car’s spec line. The transmission tunnel may be modified for the purpose of installing a competition driver seat. The floor pan must remain in its original position. The floor pan must remain in its original position. The driver’s seat shall be located longitudinally.

6. Stock dash/instrument panel cover (dash pad) must be used. Original instruments/gauges may be replaced, or supplemented, with additional engine monitoring gauges. Accessories, lights and switches may be added or removed. Box-type extensions from the dash pad may be used to mount switches and controls, in the areas where the OEM insert panels were mounted, so that they more easily accessible to the driver. Audio and video systems may be removed.

7. Vertical bulkheads, and enclosures, within the cockpit shall not be any higher than the bottom of the side windows, and shall not extend more than 18.0 inches above the floor pan. No bulkheads shall cover the rear foot wells.

   a. Sedan Body (4-door) and Hatchback Body (3-door) - Any bulkheads positioned in front of the plane determined by the OEM rear seat back shall not extend laterally from one side of the chassis to the other, but rather shall only be large enough to cover the individual components necessary.

   b . Coupe Body (2-door) - Any bulkheads positioned in front of the plane determined by the OEM rear seat back, if

applicable, may extend laterally from one side of the chassis to the other.

8. Dash pad modification – It is permitted to modify the dash pad in order to run the roll cage tubes through the dash area as long as the dash pad is modified only enough for roll cage fitment. If necessary, the dash pad may be parted to ease installation around roll cage. Any such parting shall be done in such a way as to minimize the appearance that they have been separated once pieces of dash pad are installed.

D. Chassis

1. All cars shall have the OEM rear package shelf and/or rear seat back support structure installed if applicable. As an alternative, a metallic close out panel may be installed that simulates the rear package shelf and/or the rear seat back support structure if applicable. If a close out panel is used to clean up the appearance of the rear package shelf and/or rear material is free.
2. Cables, wiring and fluid lines in the engine compartment and cabin interior may be replaced, rerouted, and/or protected.
3. Cars that have drive shafts shall have 2 steel, 360-degree loops of sufficient strength located as close as possible to the front and rear universal joints to prevent the driveshaft from dropping in case of failure of either universal joint. Floor materials, torque tubes and cross members may also be utilized to provide this protection.
4. It is permitted to attach one or more plates, or pads, under the car to provide for jacking of the car, provided they serve no other purpose. It is prohibited to install any kind of device, which protrudes from the rocker panel or side of the car. However, tubes may be attached to the roll cage or chassis and extend to the inner surface of the rocker panel or bodywork to act as a receptacle for a jacking fixture. Air jacks are permitted, but no air source may be carried on board.
5. Ride height will be measured at the lowest point of the rocker panel, not including the pinch weld. Minimum ride height is 3.5 inches.
6. The OEM firewall between the cockpit and engine compartment shall be intact to prevent the passage of flames from the engine compartment to the cockpit. Any holes in the firewall must be of the minimum size for the passage of controls and wires, and must be completely sealed.
7. Both front windows, driver and passenger, shall be down (preferably removed) whenever the vehicle is on track. The OEM window opening on the front doors shall not be filled in with any material, other than the material required to mount a NACA-duct for driver cooling. If used, the NACA-duct shall be mounted in the front, lower, corner of the window opening. The area closed off to mount the NACA-duct shall not exceed 50 square-inches. In rain conditions, a quarter window larger than 50 square-inches may be used in the area normally used to mount the permitted NACA-duct, in an attempt to minimize the amount of water entering the cockpit. Enough open area for the driver to exit in an emergency shall remain open at all times.
8. All vehicles must use a stock, OEM equivalent, safety glass windshield, or 6 mm minimum thickness Lexan replacement, mounted in the stock location, at the stock angle and maintaining the stock profile.
9. Windshield clips, per GCR section 9.3 Windshield Clips/Rear Window Straps, are permitted and recommended.
10. Side windows, not including the front door windows, and rear windows may be replaced by clear Lexan-type plastic material having a minimum thickness of 0.125 inch, but must retain the same shape, size, and location as the original glass. NACA-ducts may be mounted in the side windows. The rear window must be secured by 2 additional straps 1.0 inch wide by 0.0625 inch thick minimum, bolted or riveted to the body at both the top and bottom of the rear window. If a Lexan rear window is mounted with multiple, evenly spaced screws around each side of its perimeter, safety straps are not required. If a DOT spec glass rear window is used in conjunction with the OEM method of mounting, safety straps are recommended, but not required.
11. Windows may be mounted and sealed with silicone. Any silicone used to bridge the gap between the perimeter of the window and the chassis shall be neat in appearance and uniform in thickness. Tape may only be used to seal the windows during wet track sessions for the purpose of reducing the amount of water entering the cockpit.
12. OEM side window framework shall be intact.
13. Acrylic or glass removable/moveable roof panels may be replaced with the same material as the surrounding roof. All brackets, mounts, and moldings must be removed. Fabric tops are not permitted and shall be removed along with all associated hardware. It may be replaced with an OEM hardtop if one is available.
14. Unused mounting tabs and brackets that are non-structural, excluding the rear seat back support and package tray, may be removed.
15. The OEM “rain gutter/tray” at the base of the windshield shall be intact and in the OEM location.
16. The floor pan may be modified to provide clearance for the exhaust system and allowed alternate transmission/transaxle.
17. Inner fender panels may be modified or replaced.
18. Convertible model cars may compete with a hardtop or as an open car.
19. Fasteners are free. Fasteners may be replaced with adhesives.
20. Rounded coverings may be used at the rear of the front window openings to bridge gap between the leading edge of b-pillar and inner edge of main roll hoop. The material and design of these coverings is free, but shall be neat in appearance and securely fastened.
21. A third (3rd) tube on each side may extend through the firewall to the chassis in the engine compartment. These tubes shall not extend forward of the shock towers.
22. An underbody close-out panel(s) may be used in the area behind the rear axle. These panels shall not alter the external appearance of the car when looking from the rear and sides of the car (i.e. we want to have to lay on the ground to see them). If the production car uses underbody trim pieces, the OEM trim pieces may be removed or replaced, but any close-

out panel(s) used may not visually hide any more of the mechanical components, when looking from the rear and sides of the car, than the OEM trim pieces do. The close-out panels shall not completely bridge the gap between the rear floor pan area and the rear axle centerline. On rear engine cars, any close-out panels shall not extend any further forward than the rear axle centerline. Cars with a fuel cell, engine, etc. that extend down into external visual range shall fit the close-out panel(s) around the component in such a way that it does not alter the external appearance of the car.

E. Engine

1. Alternate engines may be used, if the manufacturer of the vehicleand engine are the same (e.g., an Acura engine installed into a Honda car) and was available in a car delivered in North America. Vehicles delivered with engines from other manufacturers (e.g. Morgan, Panoz, etc) may only use the originally installed engine, or another engine manufactured by the chassis manufacturer (e.g. Lotus Elise may use the Toyota ZZ engine, or any other Lotus manufactured engine that complies with the class rules, however a Lotus Esprit may not install a Toyota ZZ engine).

   The chosen engine must retain its original cylinder head and intake manifold. Competitors must have in their possession a copy of the factory shop manual for both the drivetrain and chassis for use by scrutineers. If an engine from a front wheel drive vehicle is installed in a rear wheel drive vehicle, alternate OEM intake manifolds may be considered. The long block assembly of the alternate engine must remain within the engine compartment with no modifications, however the firewall may be modified to provide clearance for intake manifolds and/or engine accessories. It is permitted to use the OEM intake and throttle body for either the chassis or the installed engine. If needed to allow the intake manifold fit on the engine, an adapter plate between the engine and manifold is permitted. This adapter plate must be no more than 1.0 inch thick and must be made of the same material as either the head or intake manifold.

   Engines from vehicles not available in a car delivered in North America will be considered and approved on a case-by-case basis for use in ST. For an engine to be considered, a member must submit to the CRB a Vehicle Technical Specifications (VTS) sheet with all engine parameters filled out. Copies of the appropriate factory shop manual are also useful for this consideration. Any deviations from the STCS that will be required for installation (e.g., trans adapter plate, alternate intake manifold, etc) must be noted in the “Requested Non-Stock Allowances” section, otherwise they will not be allowed. Once this information is received and considered, any approved engines will be noted in a separate table within the STCS.

2. The crankshaft shall be a stock OEM part or an aftermarket part as long as it is of identical dimensions and material as the OEM part for the specific engine. The crankshaft may be balanced. The maximum weight reduction allowance for balancing of the crankshaft is 0.5 lbs. The maximum weight reduction allowance for the balancing of the reciprocating assembly is 15 grams. Alternate connecting rods are permitted, but must be ferrous unless OEM supplied.
3. Blocks may be sleeved to repair cylinder walls. Engines may be bored to a maximum of .040 inch over standard bore size.
4. Rocker arm, lifter, follower, pushrod, valve spring, keeper, retainer, guide, seat, and valve materials are free; Titanium is not permitted, except for retainers or OEM parts. The head may be machined to fit valve train components.
5. Alternate camshafts are allowed; see individual class rules for lift limits. Camshaft timing is free.
6. Cars produced with an electronic throttle body may use the OEM electronic throttle body. The OEM electronic throttle body may be converted to manual actuation and the actuation cam on a manual throttle body may be changed to alter the opening/closing rate of the butterfly. Alternately actuated throttle bodies may be considered on a case-by-case basis.
7. The ignition system is unrestricted.
8. A programmable ECU is permitted. Engine calibration (spark and fuel) is free.
9. Fuel injectors and fuel rails must maintain the original number and mounting locations, but are otherwise free. Fuel pumps and fuel filters are free in type, size and number.
10. The location and type of the fuel pressure regulators are free provided they are mounted within the engine compartment or the OEM location.
11. The oil pan and oil pickup may be baffled, modified, or replaced. The OEM oil pump may be modified, or replaced with an OEM-style oil pump. Cars using a wet-sump oil system shall safety wire or in some other way secure the oil drain plug.
12. Vents, breathers, and oil filters may be added, or substituted. All emission control devices may be removed and the resulting holes plugged. It is recommended that cars using a wet-sump oil system safety wire or in some other way secure the oil drain plug.
13. Replacement gaskets and seals are free, including head gaskets. Replacement gaskets and seals must be made out of material(s) designed to seal the parts of an engine. Replacement gaskets and seals may not perform any other functions. Head gaskets may be used to adjust compression ratio.
14. The intake manifold on piston engines may be port matched to the head(s), provided no material is removed further than one inch in from the manifold to head mounting surface(s).
15. Variable cam timing (VTEC, VANOS, etc.) and variable length intake manifolds may be partially, or wholly, disabled. Variable cam timing systems that use multiple cam lobes for each valve(s) may remove lobes from the camshaft(s) that are not being used. For 13B Rotary Engines the 5th and 6th intake port actuators and valves may be removed or disabled.
16. To inrease the compression ratio, the bottom of the head may be machined. Alternate pistons are permitted and/or the pistons may be machined.
17. Cars utilizing forced induction may not have a boost controller within reach of the driver. A car must enter pit lane to have the boost level changed by the crew if necessary. Competitors must be prepared to demonstrate the boost adjustment process to officials.
18. Engine parts, including, but not limited to, heads, intake manifolds and carburetors, may be cleaned using usual methods (e.g., bead blasting, soda blasting, Scotch Brite pads) as long as part dimensions are not altered
19. All cars shall use the installed engine’s stock air throttling devices (e.g., throttle body, carburetor) and intake manifold,

unless noted otherwise. Components upstream of the throttling devices are free.

20. Unless otherwise noted, the follow restrictions apply to turbochargers. The inlet restrictor (if required) shall be positioned in the compressor inlet housing. Turbochargers may be added to engines that did not originally come equipped with one on a case by case basis. Swapping of turbochargers between engine makes and models is prohibited. Supercharged cars may be approved on a case-by-case basis. Contact the Club Racing Technical Office for details.

21. Alternate water pump, alternator, crankshaft dampers, and/or power steering pulleys are unrestricted. Crankshaft pulley is unrestricted for all non-supercharged engines; supercharged engines must use OEM crankshaft and supercharger pulleys.

22 Intake Requirements: All cars shall use the stock or approved air throttling device (e.g., carburetor, throttle body) and intake manifold for the installed engine, unless noted otherwise.

23 All cars may fit the approved carburetor and manifold. The approved manifold may be ported and polished, but its design and configuration shall not be altered in any other way. The lowering of or boring of holes in the center divider is prohibited. Removal or obliteration of the manifold part number is prohibited.

a. The approved carburetor shall be a maximum of 650 cfm and 4 barrels. The approved optional insulator (Holley #108- 12), and manifold (Edlebrock Performer RPM #7101-General Motors / #7121-Ford/Mercury) shall be fitted to cars.

b. Except as permitted in these rules, the carburetor shall not be modified in any way. Any carburetor jets, accelerator pump, pump cam, and accelerator pump nozzles may be used. Power valves, metering blocks, and floats may be altered or replaced. No venturi (including secondary or auxiliary) shall be modified in any way, but they may be aligned. Idle holes may be drilled in the throttle plates (butterflies). Carburetors may be modified to allow “four corner” idle adjustment.

c. The external throttle linkage to the carburetor may be modified or changed. Choke mechanisms, plates, rods, and actuating cables, wires, or hoses may be removed. No removal or alteration of the carburetor air horn is permitted.

d. All air entering the intake tract shall pass through the carburetor air inlet.

24 Cars may modify, or replace, motor and gearbox mounts provided that the engine is located in the specified location. This includes the use of “torque plates”. All engines will be mounted in the stock position unless otherwise specified. Where an engine setback is allowed, the OEM firewall may be modified only enough to accommodate the engine set back.

a. The following cars may set the engine rearward a maximum of 4.0 inches and may lower the engine a maximum of 1.5 inches:

1. Cadillac CTS-V (04-07)
2. Pontiac GTO (04-08)
3. Ford Mustang (85-06)
4. GM F-Body (93-02)

25 The intake and exhaust ports on piston engines may be ported at a 3% weight penalty. The valve guide may be machined as part of this porting.

26 Compression ratio is limited to 12.0:1. For OEM engines the compression ratio is as specified.

27 Valve lift is limited to .600 inches. OEM engines must retain OEM valve lift and duration.

28 Dry sump systems are allowed. The dry-sump system is limited to 5 stages. It shall consist of 1 pressure stage and a maximum of 4 scavenge stages. If the OEM style pressure pump is used it shall count as the one permitted pressure stage. There may be a maximum of 2 two-port scavenge stages, or a maximum of 4 single-port scavenge stages, or any combination such that oil is not being scavenged from more than a maximum of 4 locations.

H. Cooling Systems

1. Water Cooling

   Provided that the stock method of cooling is retained, the cooling system is free, including cooling fans, but the water radiator must remain in the approximate OEM location. The mounting angle may be changed.

2. Engine Oil Cooling- Coolers for the engine oil are free in number, type and location.

3. Intake Air Cooling- Cars utilizing forced induction may install intercoolers. The number, type, and location of intercoolers are free.

4. Water Spray Systems- Water may not be sprayed on any intercoolers, radiators, etc. Water spray systems may only be used to inject water into the brake ducts.

I. Fluid Piping & Fuel Tank

1. Fuel Cells/Tanks- The use of a fuel cell is required unless the stock fuel tank is located between the axle centerlines and within the main chassis structure (i.e., frame rails, etc.). All fuel cells must comply with GCR 9.3. Proper bracing to protect the fuel cell in the event of a rear-end crash is required. If a fuel cell is installed in the rear hatch/rear trunk area, the OEM floor pan in that area may be replaced with metal in order to make it easier to mount the fuel cell and close out the area around the fuel cell.

2. There must be a metal bulkhead completely separating the cockpit from the compartment containing the fuel cell. This does not negate the requirement that the fuel cell bladder be contained in a metal container.

3. No line containing engine coolant may pass through the cockpit. No hydraulic fluid lines may have removable connectors inside the cockpit.

4. All fluid hoses, lines, reservoirs, and tanks that are in the cockpit, or cargo area that is open to the driver, shall be separated from the driver by rigid metallic and/or non-metallic enclosures and/or deflection shields to prevent fluid from spraying on the driver in case of a leak. Magnesium is prohibited. Waterproof flexible wraps may also be used to prevent fluid from spraying on the driver. The floor of these enclosures, or the area under the deflection shields, shall be designed to prevent the accumulation of fluids.

5. No fuel cooling devices are permitted in the car.

J. Oil System

1. If oil storage tanks are not located in the original position they must be surrounded by a 10 mm thick crushable structure. Provided that the oil tank is not located in close proximity to the outer surface of the bodywork, and there is some of the structure of the vehicle between the oil tank and the bodywork, the car's structure will meet the 10mm crushable structure rule.

2. If the oil tank is located in the cockpit area, or a trunk area that is open to the driver, it must be separated from the driver by a metal enclosure made up of .036 inch steel, or .059 inch aluminum. This is in addition to the 10mm thick crushable structure that is required in section 9.1.4.I.2. The floor of the enclosure must be designed to prevent accumulation of fluids.

3. Accusump-type systems may be used.

K. Exhaust System

1. The exhaust system may be modified, or replaced.

2. Outlets must be located rearward of the midpoint of the wheelbase.

3. The exhaust pipe may not protrude more than 3.0 inches at the point where it exits the bodywork. If the exhaust pipe(s) exit the bodywork at the widest part of the body such that any extension of the exhaust pipe(s) beyond the body would make pipe(s) the widest point, the exhaust pipe(s) must be trimmed flush (+/- 0.5 inch) with the bodywork at the point that they exit the body. Minor body modifications are permitted to accommodate exhaust systems. Modifications shall serve no other purpose. The underbody rocker panels may be modified for the installation of the exhaust system, but these modifications may only serve to provide clearance for the exhaust system. The exhaust system must be adequately isolated from the driver's compartment.

4. If the exhaust system is routed in such a way that damage to it could cause hot exhaust to contact any part of the fuel system, there shall be a metallic heat shield protecting the fuel system components. This heat shield shall be located at least 3.0 inches away from the exhaust system, and there shall be at least 3.0 inches between the heat shield and the fuel system components.

L. Electrical System

The electrical system is free provided that:

1. Batteries are free, subject to GCR 9.3.9.

2. Standard headlights, headlight operating ancillaries, and parking light assemblies may be removed and replaced with a plate of identical shape and size of the lens. Standard headlight assemblies may be replaced with aftermarket units of equal dimension. Vehicles with pop-up and/or hidden headlights may modify and/or remove the headlight assemblies as long as the headlight cover and any other external hardware are properly secured in the stock closed location.

3. Fog/driving lights, parking lights and associated attaching hardware may be removed. The resulting openings may be used to duct air, or may be filled/covered. No ducting may extend beyond the outer surface of the bodywork.

4. Each car must be fitted with at least one effective windshield wiper assembly, which must be in working order throughout the event. Wiper blades, arms and associated hardware may be substituted freely. Other windshield wiper assemblies may be removed.

5. Each car must have an effective defogging/demisting system that is capable of keeping the windshield clear during wet sessions. Anti-fog films meet this requirement.

M. Drivetrain

1. Alternate differential housings are permitted from the same model of vehicle. Differential may be open, locked, or of a limited-slip type. The internals
of limited-slip type differentials may be modified to change the amount of slip limiting. Differentials with external, or electric, adjustability are prohibited. Driveshaft and half-shafts may be aftermarket, but shall be the OEM-type and use the same types of materials as stock. Drive shafts may be replaced by one piece drive shafts, and conversely.

2. Vent and/or breather lines may be added to the transmission and/or differential. 1 transmission cooler and 1 differential cooler are permitted.

3. Alternate flywheels and clutches are permitted. Flywheel material shall be ferrous or aluminum and the ring gear diameter must be the same as the OEM flywheel. Clutch and pressure plate design is free. Carbon clutches are permitted.

4. Transmissions and ratios are free. Forward gears are limited to six speeds. Cars with aftermarket sequential shift transmissions shall increase the required minimum weight by 100 lbs.

5. Traction Control/Launch Control is permitted, but must operate solely through the engine managements system (i.e., spark and fuel control) and may not interface with, or affect, the braking system or throttle control.

N. Suspension and Steering

1. All suspension members must be made from ferrous and/or aluminum materials. Chromium plating of suspension members is prohibited.

2. Suspension springs are free. Coil-over units may be added to supplement or replace OEM springs. Attaching points may be reinforced. It is permitted to use threaded spring seats for adjustability.

3. Shock absorbers and struts are free. Driver adjustable systems and electronically controlled shocks are not permitted. If a reservoir/adjustment canister is used, only one may be used per shock. The shocks at each individual wheel may not be connected in any way.

4. Stabilizer bars are free, and may be added, removed, or substituted. Driver adjustable stabilizer bars are not permitted. Adjustment controls for stabilizer bars may be located within the cockpit, but must be out of the reach from the driver's seat. Adjustments to stabilizer bars during practice, qualifying and race must be done in pit lane.

5. Suspension components shall be the stock OEM parts, but they may be reinforced. Heim joints are permitted on suspension components. Standard suspension bushings may be replaced with solid or spherical bushings.

6. Any anti-roll bar(s) and rear axle traction bar(s), rear axle panhard rod and watts linkage can be added or substituted, provided their installation serves no other purpose. The mounts for these devices can be welded or bolted to the car. These devices and their mounts cannot be located in the trunk or driver/passenger compartment unless fitted as stock. Rear axle traction bar(s) used to control axle housing rotation must be solid bar or tube.

7. When a car's anti-roll bar also acts as a suspension locating device, the bar's attachment points and pivot points on the chassis and suspension control arms must remain in their stock locations.

8. Slotted plates may be added over original shock mounts on front and rear shock towers for camber/caster adjustment. One bolt-in brace may connect the front strut towers, and one bolt-in brace may connect the rear strut towers.

9. All steering components, with the exception of the steering wheel, column and tie-rods/toe-links, must be original equipment supplied by the manufacturer. These parts may be strengthened provided the original part can still be identified.

10. The steering wheel may be replaced with an aftermarket, or racing steering wheel. Wood-rimmed steering wheels are not permitted. An all-metal quick release coupling on the steering wheel may be added.

11. A collapsible steering column shall be used. Most recent OEM steering columns have at least 2 universal joints in them that allow the steering column to collapse on impact. This type of design (with at least 1 universal joint) must also be used in any steering column extension(s) that may be used to reach the driver's competition seating position.

12. Power steering may be modified in any of the following ways:

    a. disconnected

    b. an OEM manual steering rack for that model may be fitted

    c. an electric power steering pump may be fitted

    d. an OEM electric-assisted steering rack may be used.

1. Cars that come with a solid rear axle or trailing arm suspension are permitted an aftermarket or fabricated rear suspension. Cars with an altered rear suspension must add 50 lbs. Cars with live axle rear wheel drive may reduce the minimum weight by 50 lbs

2. Original suspension pick-up points below the upper line of the wheel rim must be used within a tolerance of 1.0 inch; however, if the lower suspension pickup point is changed from the OEM location, 50 lbs. must be added to the car. The body/frame around the pick-up points may be reinforced; this reinforcement shall be limited to a radius of 6.0 inches. The 1.0 inch tolerance applies to pick-up points on the chassis only.

3. Suspension mounting points above the upper line of the wheel rim must be retained within a tolerance of 3.0 inches, however, the body/frame around the pick-up points may be reinforced; this reinforcement shall be limited to a radius of 6.0 inches. The 3.0 inch tolerance applies to pick-up points on chassis only.

4. The spindle and/or outer joint on the a-arm and/or strut may be moved to correct bump steer caused by changing the vehicle ride height. These components are not limited to the 1.0 inch of movement that applies to the suspension pick-up points located on the chassis.

5. Alternate control arms permitted.

O. Brakes

1. Brake lines may be relocated, and rubber lines may be replaced with stainless steel braided brake lines. Hand brake assemblies may be removed. Brake proportioning valves may be used provided that they are of the in line, pressure limiting type. Non-pressurized brake fluid lines and master cylinders need not be metal, metal shielded, or bulkheaded. Pressurized brake fluid lines must be metal, metal shielded, or bulkheaded.

2. Brake proportioning valves may be used provided that they are of the in line, pressure limiting type. Brake pad friction material is free.

3. Hand brake assemblies may be removed. Backing plates and dust shields may be modified, ventilated, or removed.

4. Brake duct inlets incorporated in the front spoiler as standard, or in light openings, other than headlights, may be used to duct air to the front brakes. Additionally, brake ducts may be fitted into the intermediate mounting surface of a permitted splitter.

5. Water spray cooling systems are permitted. The amount of water carried for injection into the brake duct is free. Water-cooled calipers are forbidden.

6. Wheel fans are not permitted.

7. When any allowed alternate calipers are used, calipers must be mounted in the same location and orientation as the OEM calipers. OE caliper mounting tabs may be modified or removed to facilitate installation.

8. Titanium piston inserts are permitted.

9. Anti-Lock Braking Systems (ABS) are permitted on cars that use the OEM ABS brake components as supplied.

10. See individual class regulations for further restrictions/allowances.
11. Rotors- 1 or 2 piece ferrous rotors that do not exceed 355mm in diameter or 33mm in thickness are permitted. Maximum brake rotor diameter of 380mm is permitted at a 100 pound penalty.
12. Calipers- The standard production calipers or any caliper with 6 or less pistons may be used. 4-piston calipers may use a maximum of 4 pads per caliper. 6-piston calipers are limited to 2 pads per caliper.
13. Original equipment master cylinders and pedals may be replaced.
14. Power assisted braking systems are permitted.
15. The balance of braking forces between the two wheels on an axle shall be equal and non-adjustable.
16. The balance of braking forces between the front and rear axles may only be adjusted by the driver through:
    a. Direct intervention on the position of the center of the joint, on the linkage lever of the hydraulic pumps of the front and rear circuits.
    b. Direct intervention on a proportioning valve in which the intake pressure is adjusted through a pre-loaded spring.

P. Tires & Wheels

1. Tires must conform to 9.3.45.
2. Wheels / Hubs- The standard wheels may be replaced with direct, bolt-on racing/aftermarket wheels under the following provisions:
    a. Loose wheel spacers of any type are not recommended.
    b. All cars must run the same size wheel on the same axle.
    c. As viewed from above at the centerline of the wheel; the fender shall completely cover the “tread” portion of the tire. Only the tire sidewalls may be visible.
    d. The wheel material is free, but they must be constructed of metallic material(s). No modifications (including grinding) are permitted on a vendor-supplied wheel.
    e. Valve stems and caps are free.
3. Wheel Attachment
    a. Center-locking type hubs and wheels may be used if vehicle is supplied with them from the manufacturer. If vehicle is not supplied with center-locking type wheels they may be used in conjunction with an adapter that bolts onto the OEM, or approved, hub.
    b. If a single wheel nut is used, a safety spring must be in place on the nut whenever the car is running and must be replaced after each wheel change. These springs must be painted Day-Glo red or orange. Alternatively, another method of retaining the wheels may be used provided it has been approved by FIA.
4. Rear wheels may not exceed 19.0 inches in diameter and 13.0 inches in width. Front wheels may not exceed 19.0 inches in diameter and 11.0 inches in width.

J. Approved Cars and Engines

1. The following car and engine combinations are approved in STO. Send a request to the Club Racing Board http://www.clubracingboard.com/ to add additional cars.

Note: Engine Displacements in this table are nominal. Each competitor shall have available definitive documentation (e.g., factory manual) of the original displacement for the engine used.

T1	Maximum Displacement	Minimum Weight	Restrictor	Notes
Acura CL	3500	2750		
Acura NSX	3000	2650		Super-charger permitted. Zero Force Body Kit by Kawagen Route permitted.
Acura NSX Turbo	3500	2750		
Acura NSX Turbo World Challenge	3500	2850		Driving ambitions turbo kit- Part #DA-1000. Comp turbo #ct-4372 Turbo inlet restrictor of 44mm is required.
Aston Martin DB9	6000	3300		
Aston Martin GT 4	*4700*	*2900*		
Aston Martin Vantage N24 (07-08)	4280	*2800*		
Aston Martin Vantage	6000	3300		
Audi R8	*5200*	*3200*	*35mm*	*Must meet February 2012 Grand Am Specs. Must meet 9.1.4.P.1 for tire requirements.*
Audi S4 (97-02)	2700	3000		Twin K04 turbos permitted.
BMW E46 M3 & E36 / *BMW Z3*	3200	2600		The 3.4L (87.0 bore x 93.0 stroke) engine is permitted at 2650 lbs. The M5 5.0L is permitted at 3000 lbs. Flossman body kit is permitted. 4.0L V8 permitted at 2900 lbs.
BMW E46 M3	3200	2850		Dinan supercharger kit part #D860-3101C / With R865-3120 pulley required.
BMW 335ci/135i	2679	3000		Must use stock turbochargers.
BMW M3 E92 (08-09)	3999	3200		
Cadillac CTS/CTS-V Chevrolet Camaro Chevrolet Corvette Pontiac Fiero Pontiac Firebird *Pontiac GTO* *Pontiac Solstice*	*1998*	*3000*		*GM Ecotec LNF. Alternate Turbo permitted.*
	4999	2620		*GM V-8 engines with OEM specs 3.735" bore x 3.4803" stroke.*
	5733	*3135*		*GM V-8 engines with OEM specs 4.00" bore x 3.75" stroke; e.g., LT1, LT4, L98, etc*
	6178	3150		GM LT1/LT4/L98 (only), with alternate 3.75" stroke crankshaft. Max stroke 3.75", max bore 4.04".
	5665	*3135*		GM *LS1,* LS6
	5967	3400		*GM LS2. May use the LSX cast iron block with OEM LS2 bore and stroke.*
	5967 OEM	3200		Stock OEM LS2. OEM valve lift and compression. Cylinder heads must be as delivered from the factory.
	6162 OEM	3275		Stock OEM LS3. Maximum camshaft lift: intake 8.24 mm, exhaust 7.77mm; rocker arm ratio 1.70:1; maximum compression ratio 10.7:1; cylinder heads must be as delivered from the factory.
	6162	3350	75mm Flat Plate	GM LS3
	7011 OEM	3350	75mm flat plate or 45mm SIR	Stock OEM LS7. OEM valve lift and compression. Cylinder heads must be as delivered from the factory.
	7011	3400	65mm flat plate	GM LS7
	Chassis-specific notes: **Camaro/Firebird:** Aftermarket K members are permitted. **Corvette:** The top 12 inches of the firewall must be covered with metal or reflective heat shielding material. The OE firewall may also be replaced with a metal *panel* running between the A-pillars. *For Chevrolet Corvette Z06, carbon fiber lip, APR performance part number FA-208026 is permitted. For Pontiac Solstice: May use hardtop GM PCS-0664 or equivalent aftermarket. May compete with stock fuel tank.*			
Dodge Neon SRT-4	2400	2900		Alternate Turbo permitted

Note: Engine Displacements in this table are nominal. Each competitor shall have available definitive documentation (e.g., factory manual) of the original displacement for the engine used.

T1	Maximum Displacement	Minimum Weight	Restrictor	Notes
Dodge Viper, incl. Comp Coupe, ACR/ACR-X	*7990*	*3400*		
	8000	*3400*		
	8300	3420	*(2) 53mm flat plates*	
	8300 OEM	3420	*(2) 60mm flat plates*	Stock OEM engine. Engine long block, valve train, and intake system must meet stock, shop manual specifications.
	8400	3520	*(2) 53mm flat plates*	
	8400 OEM	3520	(2) 60mm flat plates	Stock OEM engine. Engine long block, valve train, and intake system must meet stock, shop manual specifications.
	Chassis-specific Notes: OEM fuel tank may be used.			
Ferrari 355	3500	2780		
Ferrari 360	3600	2780		
Ferrari 430	4310	3380		Kessel 430 GT3 front fenders, hood and bumper permitted; if installed, single radiator is permitted. Must conform to 9.1.4.F.7.
Ferrari 430 Challenge	4310	3020		Must be prepared to the 2006 Ferrari Challenge engine and transmission specifications; DOT tires per 9.1.4.P.1; weight as specified; side windows must be removed; OEM carbon brakes or the Ferrari steel brakes from the 360 Challenge car (F 355 x 32 vented disc, R 330 x 18 vented disc) are permitted; If 18 inch "360" brakes are used, 18 inch wheels are permitted; 19 inch Ferrari Challenge wheels as delivered from factory permitted
Ford Mustang/ Thunderbird	4600	2800		Aftermarket K members are permitted. OEM independent rear suspension is permitted.
Ford 4.0L V6	*4000*	*2800*		*Rotrex C38-81 supercharger permitted.*
Ford 5.0L "Cammer" engine	*5000*	*3000*		*"Boss" intake manifold permitted.*
Ford 5.0L "Coyote" engine	*5000*	*3100*		*"Boss" intake manifold permitted.*
Ford Mustang Challenge	4600	3300		Must be prepared to World Challenge GTS rules dated 01/25/2011.
Ford Mustang/ Thunderbird (pushrod)	5000	2550		Aftermarket K members are permitted. OEM independent rear suspension is permitted.
Ford Mustang/ Thunderbird (Boss 302)	5000	3260		Allow Laguna Seca intake manifold and throttle body. OEM independent rear suspension is permitted.
Ford Mustang/ Thunderbird	5400	2900		Aftermarket K members are permitted. OEM independent rear suspension is permitted.
Ford Mustang/ Thunderbird	5800	3120		Aftermarket K members are permitted. OEM independent rear suspension is permitted.
Honda S2000	2000/2200	2600		Super-charger permitted. *ASM fiberglass fenders, ASM-AP100005 and ASM-AP100006 permitted. ASM fiberglass rear bumper ASM-AP100167 permitted.*
Lotus 211/Exige/Elise	3500	2450		
Lotus2-Eleven GT4 Supersport	1800	2100		
Maserati Trofeo Light	4244	2900		
Mazda RX-7		2750		OEM Twin Turbo Charger with no restrictor or any turbo charger with 44mm Turbo Inlet Restrictor permitted.
Mazda RX-7 20B		2800		Engine may be Street Ported; contact SCCA Technical Services for details.
Mistubishi/ DSM	2000	3000		Alternate Turbo permitted. *4G63 block with MD346026 crank allowed resulting in 2324cc displacement allowed.*

Note: Engine Displacements in this table are nominal. Each competitor shall have available definitive documentation (e.g., factory manual) of the original displacement for the engine used.

T1	Maximum Displacement	Minimum Weight	Restrictor	Notes
Mitsubishi/ DSM	2400	3000		Alternate Turbo permitted
Mitsubishi Evo/DSM	3000	2900		OEM Twin Turbo Charged required
Nissan GTR	3800	3520	(2) 35mm TIR	Classification effective 10/1/11. Must use OEM GTR twin turbo chargers
Nissan 350/370Z	3800	3520	(2) 35mm TIR	Classification effective 10/1/11. Must use OEM GTR twin turbo chargers
Nissan 300ZX	3000	3000		OEM Twin Turbo Charged required
Nissan 350Z	3500	2450		
Nissan 350Z/370Z	3700	2600		
Nissan 350Z/370Z	5600	3135		Classification effective 10/1/11.
Panoz Esperante GTS	*5800*	3000		
Porsche Cayman (05-11)	3600	2875		
Porsche 944	*2500*	*2700*		*May use Jayco super 50 Turbo.*
Porsche 996	3600	2808		
Porsche 997	3600	2960		
Saleen SR	5800	3190		
Toyota Supra		3000		OEM Twin Turbo Charged required

INTRODUCTION TCS

These specifications are presented as an adjunct to your Factory Shop Manual. They are not meant to supersede the information that is in your manual that legitimately applies to your make, model, and year of car, with the exception of the following items. TIRE SIZES, RIM WIDTHS, SPRINGS, SWAY BAR(S), AND PERFORMANCE EQUIPMENT. In the case of the foregoing exceptions, the TCS will have priority. Voids or mistakes that may occur in the TCS do not allow you to change your vehicle to conform to the TCS.

These specifications reflect the best information available at the time of publication. Any error found in this edition will be updated when reliable specifications are available from the factory/factory distributor or other sources recognized by SCCA, Inc.

A model is defined as a unique car configuration which can be identified by means of decoding the Vehicle Identification Number.

These Specifications are part of the SCCA General Competition Rules (GCR), and all classified automobiles shall conform with the requirements of GCR Section 9 unless this Category is specifically exempted from said requirements.

A. Purpose
Touring Category Classes are intended to provide the Membership with the opportunity to compete in commonly-available, recently-produced automobiles in as near the legal, street-driven form of those automobiles as is practically and safely possible under racing circumstances.

B. Intent
Touring Category automobiles shall, at all times, be in compliance with the specifications contained within their factory Shop/ Service Manual(s) except as modified by these rules. Factory Shop/Service Manuals may come in the form of printed material, microfiche, CDs, DVDs and/or Internet access to manufacturer sponsored web-based databases. It is the responsibility of the competitor to provide the electronic device capable of accessing the data for compliance verification.

1. The competitiveness of any car in any Class shall not be guaranteed, nor shall the continued recognition of any car in any Class. Eligibility of cars may be discontinued at any time and for any reason, other than that of competitive stature.

C. Specifications
The SCCA shall publish Touring Category Specifications (TCS), containing the basic officially recognized specifications for each car eligible to compete in the Category during the calendar year.

1. To supplement those Specifications, competitors in the Touring Category shall be required to have in their possession a factory Shop/Service manual or its equivalent (See TCS section 9.1.10.B) for the specific make, model and year of the automobile entered. This manual or its equivalent will assist in determining the originality and configuration of the automobile, and shall be presented at Technical Inspection for every event and when otherwise so officially requested. If the factory Shop/ Service manual is not available, then the competitor shall have a copy of the official SCCA Vehicle Technical Sheet (VTS) with

them at every event and shall present it for reference when officially requested.

2. The proof of legality or illegality shall rest upon the protestor and/or protestee.

3. The Club Racing Board may classify any particular model of a car, and may permit specific factory options for that car. Cars classified shall have been approved by the ARB, EPA, and DOT for sale in the United States, and shall be models intended to be available to the general public for purchase. Such options shall be listed on the Specification Line for that vehicle. No unlisted models or factory options are eligible. If no specific model or options are listed on said line, the classified car shall be the base model with no options. Converting a car delivered with an automatic transmission to a manual transmission is allowed as long as all components which differ, including, but not limited to, radiator, springs, engine management systems, final drive ratio, etc., are converted to manual transmission specification.

a. Only those cars listed each year are eligible to compete. Additions and/or deletions of automobiles shall be at the discretion of the SCCA. *Cars more than 5 model years old will not be classified. Competitiveness of cars is not guaranteed.*

b. "Special Performance" specifications from the manufacturer which go beyond those listed in the Touring Specifications book will not be considered valid. Any manufacturer determined to be supplying false specifications to competitors or to the SCCA may be advised that said specifications may be withdrawn or the eligibility of the car(s) involved shall be terminated. The Club Racing Board is authorized to implement these terminations on an immediate basis without the approval of the Board of Directors.

c. In the case of service circulars, recalls, etc., the burden of proof of validity shall be upon the competitor.

4. To maintain the stock basis of Touring, updating and/or backdating of components is only permitted within cars of the same make and model as listed on a single Touring Specification Line. Interchanging of parts between engines of varying displacements is prohibited.

   a. The Club may permit substitution/replacement of certain components or modification of some assemblies on Touring Category automobiles. To assist in equating competition potential, not all automobiles may be permitted some or all of these allowed substitutions and/or modifications. Any such permissions shall be listed on the Specification line for each vehicle Where a kit or option is permitted on a specification line, all of the listed parts must be used.

5. The Vehicle Identification Number (VIN) shall correspond with the automobile classified and the automobile presented for competition. VIN stampings and/or plates shall remain in place.

   a. A car may be entered in competition if there is at least one VIN stamping or plate on the dashboard or chassis that corresponds with the model of automobile classified.

   b. The tenth (10) position letter of the VIN determines the model year of the car ("W" = 1998, "X" = 1999, "Y" = 2000, "1" = 2001, "2" = 2002, "3" = 2003, etc.).

6. In order to equate competition potential, the Club may specify a competition weight for the vehicle. Additionally, and to this same end, it may direct that a specific amount of ballast be mounted in the vehicle in a specific location. Refer to Section E.2. of these Rules for additional details.

7. When alternate parts are approved for competitor use, the requesting party must first provide proof that sufficient quantities of the parts are readily available through commercial channels. The kit must be submitted to SCCA Club Racing Technical Services for inspection, and the kit may be returned to the sender.

D. Modifications (Configuration)

The following items represent the only modifications and safety items permitted and/or required on Touring Category automobiles. No permitted component or authorized modification shall additionally perform a prohibited function.

1. Engine

a. Component Modification

1. Overhaul procedures which in the slightest way could increase performance beyond factory specifications shall not be utilized, e.g. porting/polishing, etc.
2. Blueprinting and balancing is allowed.
3. No engine component(s) shall be modified in any manner that is not specifically permitted or authorized by the Factory Service Manual or legitimate Factory Technical Bulletins.
4. "Special Performance" specifications from the manufacturer which go beyond those listed in the TCS book shall not be considered valid.

b. Induction System

1. Air Filter(s) elements (only) may be substituted.

c. Fuel System

1. All fuel system components, settings, and specifications shall be as specified by the manufacturer. Fuel filters may be substituted with other fuel filters of equivalent OEM specifications.

2. Only the fuel type specified by the Owner's and/or Factory Service Manual may be used. Refer to GCR Section 9.3 Fuel, for permitted fuel specifications.

3. The stock fuel tank may be replaced with a fuel cell that is designed to mount in the OEM fuel tank location or is specifically designed to mount in the spare tire well provided that it is not necessary to modify any bodywork to accomplish the installation other than for the purposes of fastening the cell securely in place.

d. Camshaft and Valve Gear

1. All valve sizes, seat dimensions, and angles, etc., shall be in conformance with those specifications and procedures outlined in the Factory Service manual.

e. Block

1. Cylinder bore dimensions shall remain as originally specified by the Factory Service Manual. No “oversize” bores shall be permitted.

f. Oiling System

1. Engine oil may be substituted with other oil of equivalent OEM specifications. Oil additives are unrestricted.
2. Engine oil filter may be substituted with any unit meeting OEM specifications.
3. An oil catch can is permitted.
4. Any oil cooler(s) is permitted.
5. *Accusump systems and related hoses and brackets are permitted in all Touring category cars.*

g. Ignition/Starter/Electrical System

1. Spark plugs may be substituted.
2. The use of resistor or non-resistor-type plugs is permitted.
3. Batteries may be replaced with those of an alternate manufacturer, provided they are of similar amp-hour capacity, size, and weight.

h. Exhaust System

1. All cars classified in Touring may replace the catalytic converter(s) with a pipe that has the same diameter inlet and outlet as the converter it is replacing. The post catalytic converter oxygen sensor may be disabled, replaced, or removed; the resulting hole (if present) may be plugged. All Touring cars may replace any part of the exhaust system beyond the catalytic converter(s), provided:
   a. Said replacement system retains the original configuration, e.g., single or dual, etc.
   b. The system exits from beneath the body in the same approximate location(s) as the original system. When a factory (OEM) single exhaust system is cosmetically split into dual outlets, it is permitted to continue as a single system provided it exits in approximately the same location as one of the originals.
   c. The system meets all appropriate event-specific sound level requirements.

i. Other Engine Components

1. Fluid hoses, their appropriate clamps, and belts (fan, alternator, etc.) may be substituted. Related clamps and hardware are unrestricted.
2. The engine management computer or ECU may be altered, but not replaced. All modifications shall be done within the original housing. The car may meet federal emission standards, but shall provide OBD II compliant data to the data link connector.
3. Cosmetic engine covers made of plastic may be removed.
4. Any power steering cooler(s) is permitted.

2. Engine, Rotary Piston

a. All permissions and restrictions in Sections D.1.a. - m. apply.

3. Cooling System

a. Radiator(s)

1. A radiator screen of one-fourth (¼) inch minimum mesh may be added in front of the radiator. If added, it shall be contained entirely within the bodywork of the vehicle.
2. Any radiator is permitted, provided it mounts in the original location, maintains the same plane as the original core, and requires no body or structural modifications to install. No new openings created by fitting an alternate radiator may be used to duct air to the engine.

b. Air Conditioners:

1. The factory and/or aftermarket air conditioning system may be removed, provided that at least the following items associated with the system are also removed: compressor, condenser, H.D. springs/sway bars, H.D. shocks, larger tires, engine and transmission coolers and cooling fans. All duct work, wiring, Freon lines, valves, evaporators, dryers, and dash controls may remain. If the air conditioning compressor is an integral part of the drive system, the compressor may be retained and disabled or replaced with an idler pulley that serves no other purpose.
2. Items that serve a dual purpose, such as an alternator/air conditioning compressor bracket, etc., may not be substituted.
3. The gaps around the radiator that are created by the removal of the air conditioning condenser and related items may be sealed with foam.

4. Transmission/Final Drive

a. Transmission

1. Transmission lubricant may be substituted. Transmission lubricant additives are unrestricted.
2. An oil catch can is permitted.
3. Any transmission cooler(s) is permitted.

b. Final Drive

1. Unless otherwise so noted on the Vehicle’s Specification Line, the differential ratio shall be as delivered as standard equipment by the manufacturer.
2. All legitimately classified cars in Touring Class are permitted a limited-slip differential (Quaiffe, Torsen, etc.). Locked differentials are not allowed.

3. Final Drive lubricant may be substituted. Final Drive lubricant additives are unrestricted.

4. An oil catch can is permitted.

5. Any differential cooler(s) is permitted.

5. Suspension

a. Suspension Adjustments

1. Adjustment is permitted with a maximum negative camber of 3 degrees.

b. Springs, Anti-Roll bar(s), and Shock Absorbers

1. Springs and anti-roll bar(s), shall remain as manufactured unless an alternate is listed on the vehicle specification line. Cars where air conditioning units have been removed shall refer additionally to Section D.3.b.1., above, for additional spring requirements.

2. The make of shock absorber may be changed. Their number, perch location(s), system of attachment, and attachment points shall not be altered. Their type (tube vs. lever, etc.) shall not be altered. The interchange of gas and hydraulic shock absorbers is permitted.

a. The mounting hardware utilized shall be of the original type.

b. The use of any shock absorber bushing material is permitted. Note: the bushing attaching the end of the strut to the body or frame on a strut-type suspension system is considered a suspension bushing, not a shock absorber bushing.

c. The placement of the spring shall remain as stock. The distance between the lower mounting bolt, or other system of attachment, to the bottom of the spring as it sits on the perch shall be the same as stock.

d. Suspension geometry and range of travel shall not be altered.

6. Brakes

a. Components

1. The make and material of brake pads and linings may be changed.

2. Brake fluid may be substituted with any brake fluid.

3. Brake rotor dust shields may be removed.

4. Flexible rubber brake lines may be replaced with Teflon lined, metal braided hoses.

5. Any brake ducts are permitted, but they must serve no other purpose and must mount without modification to any components, except for the creation of duct intake openings. Duct intake openings may only be created by the removal of an auxiliary or fog light assemblies. A total of 2 light assemblies may be removed. The stock headlamp location is not permitted for brake ducting. If car is not equipped with an auxiliary or fog light assemblies, 2 alternative duct openings may be created by the removal of 2 sections up to 14.5 square inches of stock false grills originally located in the front fascia. No part of the fascia may be modified. The ducting must not be visible from outside the car.

6. Stock replacement brake rotors may be obtained from sources other than the manufacturer provided they are the exact equivalent of the stock rotors.

7. Wheels and Tires

a. Wheels

1. Any type wheel suitable for competition may be used, provided:

a. Any wheel not exceeding the specified diameter and rim width on the vehicle's specification line may be used.

b. Wheels are permitted any offset provided the tire tread (that portion of the tire that contacts the ground) does not protrude beyond the fender opening when viewed from the top perpendicular to the ground, unless specified differently on the individual spec line for that car. To determine compliance the vehicle should be rolled through a powdered substance, as raced with driver, in order to indicate the tire tread contact patch under static conditions. *When a maximum tire size is listed on a vehicle's specification line, aspect ratio is open and any tire may be used that does not exceed the stated maximum section width.*

c. Cars equipped with lug bolts may convert to wheel studs and lug nuts.

d. Wheel studs may be replaced with longer studs as necessary to fit optional wheels. Wheel spacers may be used for purposes of adjusting track.

2. Hub caps and wheel trim rings shall be removed from all wheels.

b. Tires

Unless otherwise so noted on a vehicle's TCS line, all cars shall run the tire size as listed for the vehicle in the TCS or an authorized replacement size. When authorized replacement tires are used, the same size tire shall be used on each axle (front tires need not be the same size as rear tires).

Tires must conform to 9.3.45. All tires shall be offered for sale over the counter through the manufacturer's tire dealer network. The brand of tire and tire pressures are unrestricted.

All cars shall run tires with a minimum of a "U" speed rating. For size determination, the molded section shall be used. All cars are allowed a section increase or decrease of 10mm or 20mm (e.g., 195 may use 175, 185, 195, 205 or 215). All cars are allowed an aspect ratio increase or decrease of 5 or 10 (e.g., 55 may use 45, 50, 60 or 65).

8. Body/Structure

a. Configuration/Modifications

1. Component Alignment: All body components shall maintain their original relationships. Gaps or openings shall not be increased, decreased, or eliminated through realignment of components. Normally occurring gaps or

seams shall not be taped over.

2. Door Glass

a. All cars shall run with both front door windows fully open (down).

3. Spoilers (Wings)
   a. Only original equipment front spoilers, dams, and rear spoilers and wings shall be permitted unless specified on the vehicle specification line.

4. Other Body Components
   a. Sunroofs, Targa tops, and T-tops are only permitted if installed by the manufacturer of the vehicle. If installed they must be retained on the vehicle, run in the closed position, and securely bolted in place unless the operating rails adequately secure the panel. Glass panels are permitted.

      Hardtops: If a hardtop is required, it shall be the original equipment hardtop from the vehicle manufacturer unless an alternate part number or manufacturer is listed on the vehicle spec line.

   b. Hatchback "privacy covers" shall be completely removed.

b. Appearance

1. Cars may be painted any color(s). Markings and numbers may be painted.

2. Vehicles shall be neat and clean, and shall not be dirty externally or in the engine or passenger compartments. They shall not show bodywork damage, and shall not be presented for competition totally or partially in primer. Cars that do not bear the prescribed identification marks, Club Racing logos, and numbers in conformance with GCR Section 9.3 Identification Markings, shall not be approved for competition.

9. Driver (Passenger) Compartment (Trunk)

a. Seating

1. All seats and seat brackets may be removed.

2. Rear heating/air conditioning ducts which are located under the seats may be removed or modified to facilitate seat installation.

b. Steering Wheel

1. Aftermarket steering wheels, and their required mounting modifications, are permitted.

c. Gauges and Accessories

1. Water temperature, oil temperature, oil pressure, and boost/vacuum gauges are permitted and shall be securely mounted, and shall perform no other function other than their primary use.

2. Interior mirror(s) may be replaced, but no such mirror shall extend beyond the confines of the interior of the vehicle.

3. Two-way radios may be used.

4. Hand controls are permitted in those instances where the driver can demonstrate the physical need for them.

5. Data Acquisition Systems

Standalone data acquisition systems are allowed to be in use in the car during practice, qualifying and race events. These devices may be connected to the data link connector in the car to extract available data. This must be a one-way out connection and no calibrating or alteration of the PCM is to be done while the car is in motion and the system in place.

6. It is permitted to add an aftermarket tachometer to any car that is not equipped with a factory tachometer.

d. Interior Modifications

1. Front passenger seat, rear seat back, rear seat bottom cushion(s), all seat-related wiring, sun visors, seat belts and their attaching hardware and bracketry may be removed. In any automobile where allowed removal of rear seats, upholstery, etc., creates an opening between the driver/passenger compartment and an exposed gas tank, fuel cell, or part thereof, a metal bulkhead which completely fills such opening shall be installed (See GCR 9.3 Fuel Cell Specifications).

2. Carpets, carpet padding, center consoles, floor mats, headliners, sun roof liner and frame, dome lights, grab handles, and their insulating, attaching or operating mechanisms may be removed.

3. Any removable covers used to cover spare tires, tools, bins, etc., may be removed along with attaching hardware and bracketry.

4. Removal of radio and speaker components is permitted.

5. All other interior trim panels, except the dashboard, may be removed. Other than to provide for the installation of required safety equipment or other authorized modifications, no other driver/passenger compartment alterations or gutting are permitted.

6. Removal of radio and speaker components is permitted.

10. Safety

a. Steering Column (Locks)

1. Steering column locks may be removed or disabled.

b. Safety Harness

1. All cars shall be equipped with a driver's restraint system meeting the specifications of GCR Section 9.3 Driver's Restraint System.

2. All cars shall have a driver's side window safety net complying with GCR Section 9.3 Window Safety Nets shall be mounted in such a manner as to provide protection in the event the driver's door opens.

3. In those cars where a window safety net cannot be installed, arm restraints shall be used. Arm restraints are not an acceptable substitute for window nets in any other type of car.

c. Fire Systems (Extinguishers)

All cars shall have, as a minimum, a fire extinguisher meeting the specifications of GCR Section 9.3 Fire System. Touring Category automobiles may be equipped with a fire system meeting the specifications of GCR Section 9.3 Fire System.

d. Passive Restraint Systems
Passive restraint systems shall be deactivated. Air bag systems shall be deactivated and may be removed. If the car is to be used on public roads, we recommend that these items be reactivated/rearmed/replaced when not in competition.

If so equipped, the rolling door lock mechanism may be deactivated by unplugging the components.

e. Towing Eyes
Towing eyes per GCR Section 9.3 Towing Eyes, shall be fitted.

f. Electrical Master Switch
An electrical master switch may be installed.

g. It is permitted to either:

- *Disconnect the stock hood release cable and replace it with a release cable easily accessible from the front of the car.*
- Disconnect the stock hood release cable and remove the stock hood latch and use hood pins to retain the hood in place.

E. Car Classification
These classifications shall be reviewed on an annual basis, and shall be effective as of January 1. Once these classifications have been officially published, no changes or additions shall be made after March 1 of the calendar year.

1. Weight

a. The weight, as listed on an automobile's Specification Line, shall be with driver and required ballast. Refer to GCR Section 9.3 Weight. If a cool suit system is utilized, it shall be weighed with the car as it came off the track.

2. Ballast
   a. Some vehicles may be required to carry specific amounts of ballast. If such ballast is specified for an automobile, in addition to the requirements of GCR Section 9.3 Ballast, the following requirements shall also be met:

1. All specified ballast shall be securely mounted in the passenger footwell of the vehicle, aft of the firewall and any footwell angle, and forward of the passenger seat unless otherwise so permitted on the vehicle's TC Specification Line.
2. It shall be in segments no lighter than ten (10) pounds and no heavier than fifty (50) pounds, and shall be capable of being weighed apart from the vehicle.
3. Each segment shall be fastened with a minimum of two (2) one-half (1/2) inch bolts and positive lock nuts of SAE Grade 5 or better, and shall utilize large-diameter, load-distributing washers.
4. Holes may be drilled in the passenger footwell floorpan for purposes of mounting the ballast (only), and said floorpan may be reinforced as required for the same purpose.

All Cars is class permitted the following changes:

- No Interiors
- Shocks Open; **After market Springs and sway bars assigned on a case-by-case basis**
- **Maximum 3.0** degrees of negative chamber is allowed on front and rear suspensions. Strut suspensions may de-camber wheels by the use of eccentric bushings, eccentric bolts (crash bolts) at the strut-to-spindle, and/or by use of slotted adjusters at the top of the strut mounting plate. If upper strut slotted plates are used, they shall be located on existing chassis structure, utilizing the manufacturer's original bolt holes and may not serve as reinforcement for that structure. On other forms of suspension, camber adjustment may be achieved by the use of shims and/or eccentric bushings.
- **OEM ECU only (Re-Flashing permitted)**
- Non-OEM Engine Cooler, Transmission Oil and Differential Cooler are permitted
- Parking brake assemblies may be removed
- Cars allowed to replace OEM upper and lower A-Arm bushings with polyurethane or Delrin bushings.

CLASS T2	Bore x Stroke(mm)/ Displ. (cc)	Wheel-base (mm)	Max Wheel Size (inch)	Tire Size	Gear Ratios	Final Drive	Brakes (mm)	Weight (lbs)	Notes:
BMW E92 M3 (08-12)	92.0 x 75.2 3999	2761	F:18x10 R:18x10	295/40	4.06, 2.37, 1.58, 1.19, 1.000, .87	3.85 or 3.15	F:360x30 R:350x24 or	3400	*StopTech Brake Kit permitted: 380x35mm 6-piston caliper Part# 83.160.6D00.XX (F) and 355x35mm 4-piston caliper Part# 83.160.0047.XX (R).* Brembo Front brake kit #1N2.8505A and Rear brake kit #2P2.8033A allowed. *Alcon Brake Kit permitted: 365x32mm (F) part # BKF9751ZG70L 6-piston caliper and 348x28 (R) 4-piston caliper (R) part # BKR9856B20L.* Springs up to 800#/in front and rear allowed. Rear spring may be located on shock. H&R sway bars part number 70053 and 71053 permitted. *80 mm Inlet Restrictor required.*

Cadillac CTS-V (06-07)	101.68 x 92.0 5967	2880	18 x 10 (F&R)	295/35	2.97, 2.07, 1.43, 1.00, 0.84, 0.56	3.73	(F) 355 Vented Dsc (R) 365 Vented Disc	3500	Brake duct extension (through fog light) PN 25534464, Fuel tank sender kit PN 25534466. Springs up to 800#/in front and rear allowed., Front Roll Bar (36mm) # 25534469,-Front Isolator #25534470, Rear Roll Bar (24mm) #25534471, Rear Isolator #25534472, F&R Links #25534473
Chevrolet Camaro SS, 1LE (10-13)	103.3 x 92.0 6162	2853	*20x10 (F) 20x11 (R)*	295/35 (F & R)	3.01, 2.07, 1.43, 1.0, 0.84, 0.57	3.45	(F)355 x 32 Vented (R)365 x 28 Vented	**3550**	1LE-SS Track Pack permitted. Tower Brace 22756880, oil-air separator 12653074, 72 mm restrictor required. Springs up to 800#/in front and rear allowed.
Chevrolet Camaro SS (98-02)	99.0 x 92.0 5666	2568	17x10(F) 17x10(R)	275/40/17	2.66, 1.78, 1.30, 1.00, 0.74, 0.50	3.42	(F) 300 Vented Disc (R) 302 Vented Disc	3250	Power steering cooler (option code V12) is permitted. Severn Canton accusump part #CA24024 or CA24006, along with Electric solenoid W/ epc #CA24273, Ac¬cusump Check Valve #CA2428, and Wheel to Wheel Adapter block # 0760-50001, and related hoses and mounting brackets are permitted. Z28 can use original hood. Strano Performance Camaro Track Package (Part #SP- 141, Spring Set (550# Front/150#Rear); Part #SP-8316. Front Sway Bar (1-3/8" or 35mm); Part #SP-8327, Rear Sway Bar (7/8" or 22mm); Part #UMI-2006,Strut Tower brace, 2 pt, 1.25" OD) permitted. Springs up to 800#/in front and rear allowed. Cold Air intake allowed.
Chevrolet Corvette C-5 Incl. Fxd Cpe (98-04) Z06 (hardtop) (01-04)	99.0 x 92.0 5666	2655	18x10 (F) 18x11 (R)	315/35/18 (max) (F&R) Rear tires may protrude up to 1.0" with GM T1 Perf. Susp. pkg. Max. camber: (F) -3.5 (R) -2.5 with GM suspension pkg.	(C5): 2.66, 1.78, 1.30, 1.00, 0.74, 0.50 (Z06): 2.97, 2.07, 1.43, 1.00, 0.84, 0.56	3.42	(F) 325 Vented Disc (R) 305 Vented Disc May use two-piece steel rotors with aluminum hats up to 5% larger than 340/330; Any four piston calipers and brackets are permitted. Any brake caliper pistons are allowed; may use the Wilwood SL6R brake caliper.	3300	GM Motorsports T1 suspension pkg. (Part # 12480062) is permitted. Parts for Z06 upgrade: LS6 Engine Assy.: P/N 88894057, Engine components if using LS1 block: LS6 cylinder head: P/N 12560801, LS6 intake manifold: P/N 88890524 or 12480075, LS6 camshaft: P/N 12560950, LS6 valve springs: P/N 12565117, LS6 valve shims: P/N 12565118, Lifter valley cover: P/N 12568002, PCM: P/N 12200411, LH Exh manifold: P/N 12561255, RH Exh manifold: P/N 12561256. C-5 exhaust system may be modified to mate to Z06 exhaust manifolds. Cage attachments points may be on the frame. Floor may be modified to facilitate installation of cage mounting plates. Wrapping of tie-rod ends to shield heat is permitted. This max. tire supersedes TCS 9.1.10.D.7.b. C6 calipers permitted. Alternate wheel bearings SKF Part # BAR 5049C permitted. OEM or equivalent carbon fiber hood is allowed. The A.I.R air pump system may be removed. **Flat plate restrictor 63 mm** **With headers: Flat plate restrictor: 55 m**m
Chevrolet Corvette C6 Coupe (05-10) / Grand Sport (*10-12*)	101.68 x 92.0 5967 (LS2) 103.26 x 92.0 6162 (LS3)	2685	18 x 10 (F) 19 x 11 (R) or 18 x 11 (F) 19 x 13 (R)	315/35 max. (F&R) Rear tires may protrude up to 1.0" with GM T1 Performance Suspension package. Max. camber: (F) -3.5 (R) -2.5 with GM T1 Performance Suspension package.	2.66, 1.78, 1.30, 1.00, 0.74, 0.50, or 2.97, 2.07, 1.43, 1.00, 0.71, 0.57	3.42	(F) 325 / 340 Vented Disc (R) 305 / 330 Vented Disc or (F) 355 x 32 Vented Disc (R) 340 x 26 Vented Disc or May use 2-pc steel rotors with alum. hats up to 5% larger than Z51 rotor. ---------- LS2 may use Grand Sport brake package. Any brake caliper pistons allowed. May use any four piston brake caliper and brackets. Z06 brake calipers allowed.	**3400** Add 50 lbs. for larger wheels and/or tires	C6 T1 Suspension kit and Z51 option allowed. Floor may be modified to facilitate installation of cage mounting plates Removable roof panel shall be installed. The following parts are allowed: GM oil pan #12630477; GM radiator baffle # 25953429 (LS3 only); fan shroud, Phoenix part # 1005422; Canton Accusump part # CA24006 or # CA24024, along with Electric solenoid W/ epc # CA24273, Accusump Check Valve # CA2428, and Wheel to Wheel Adapter block # 0760-50001, and related hoses and mounting brackets; 180 degree thermostat Hypertech # 1015; Lingenfelter Performance Engineering #L310055204 thermostat (LS2 only); HD oil pressure shim Phoenix part # 1005421. Wrapping of tie-rod ends to shield heat is permitted. Trimming of the lower edge of the center of the air dam is allowed up to a depth of 3.9 cm. ARE dry sump system part #3021 S permitted; the following parts are included: mount w/tensioner and spacer #3020YM, serpentine belt #4032S, pulley #4SERP, oil tank #7030, tank bracket #7000, breather catch can # 7100, filter adapter #4010, damper assembly #8005. Aviaid Dry Sump System part number 008-10001 is permitted; the following parts are included: 3-stage pump 13111-1182, mounting hardware 40082 and 40018-83-1, HTD pump pulley 11649, HTD belt 46476, ATI damper assembly 917289, pan assembly 152-52504-10001, and tank assembly 110-50020-10001. The oil tank for either system shall be installed in the current battery location and the battery must be relocated to the same location as the 08 Corvette Z06; GM battery mounting bracket and hardware must be used. Alternate wheel bearings SKF Part # BAR 5049C permitted. **LS2: 64 mm flat plate restrictor is required** **LS3: 52 mm flat plate restrictor is required**

Chevrolet Corvette Z06 (2006-2012)	*103.26 x 92.0 6162*	*2685*	*18 x 10 (F) 19 x 11 (R) or 18 x 11 (F) 19 x 13 (R)*	*315/35 max. (F&R)* *Rear tires may protrude up to 1.0" with GM T1 Performance Suspension package.* *Max. camber: (F) -3.5 (R) -2.5 with GM T1 Performance Suspension package.*	*2.66, 1.78, 1.30, 1.00, 0.74, 0.50 or 2.97, 2.07, 1.43, .1.00, 0.71, 0.57*	*3.42*	*(F) 325 / 340 Vented Disc (R) 305 / 330 Vented Disc or (F) 355 x 32 Vented Disc (R) 340 x 26 Vented Disc or May use 2-pc steel rotors with alum. hats up to 5% larger than Z51 rotor. ----------. Any brake caliper pistons allowed. May use any four piston brake caliper and brackets. Z06 brake calipers allowed.*	***3450***	*C6 T1 Suspension kit and Z51 option allowed. Floor may be modified to facilitate installation of cage mounting plates. The max. tire sizes supersede TCS 9.1.10.D.7.b. Removable roof panel shall be installed. The following parts are allowed: GM oil pan #12630477; GM radiator baffle # 25953429); fan shroud, Phoenix part # 1005422; Canton Accusump part # CA24006 or # CA24024, along with Electric solenoid W/ epc # CA24273, Accusump Check Valve # CA2428, and Wheel to Wheel Adapter block # 0760-50001, and related hoses and mounting brackets; 180 degree thermostat Hypertech # 1015; HD oil pressure shim Phoenix part # 1005421. Wrapping of tie-rod ends to shield heat is permitted. Trimming of the lower edge of the center of the air dam is allowed up to a depth of 3.9 cm. ARE dry sump system part #3021 S permitted; the following parts are included: mount w/tensioner and spacer #3020YM, serpentine belt #4032S, pulley #4SERP, oil tank #7030, tank bracket #7000, breather catch can # 7100, filter adapter #4010, damper assembly #8005. Aviaid Dry Sump System part number 008-10001 is permitted; the following parts are included: 3-stage pump 13111-1182, mounting hardware 40082 and 40018-83-1, HTD pump pulley 11649, HTD belt 46476, ATI damper assembly 917289, pan assembly 152-52504-10001, and tank assembly 110-50020-10001. The oil tank for either system shall be installed in the current battery location and the battery must be relocated to the same location as the 08 Corvette Z06; GM battery mounting bracket and hardware must be used. Alternate wheel bearings SKF Part # BAR 5049C permitted..* **LS2: 64 mm flat plate restrictor is required** **LS3: 52 mm flat plate restrictor is required**
Dodge Viper RT-10/ RT-10 ACR & GT-S / GT-S ACR (96-02)	101.6 x 98.5 7990	2444	18x10 (F) 18x13 (R)	(F) 275/40 (F) 315/35 (max) (R) 335/35	2.66, 1.78, 1.30, 1.00, 0.74, 0.50	3.07	(F&R) 330 Disc	**3600**	Alternate Oil Pan (Part # P5007009), Throttle restrictor between each throttle body and plenum is mandatory: 0.060" flat steel plate with **one 40 mm hole**. This max. tire supersedes TCS 9.1.10.D.7.b.. May update to 03-06 Viper brakes.
Dodge Viper SRT-10 Incl. Coupe (03-06)	102.4 x 100.6 8300	2510.2	18x10 (F) 19x13 (R)	(F) 275/35 (F) 315/35 (max) (R) 345/30 Maximum camber: (F) -3.0 w/ Dodge Motorsports T1 suspension package	2.66, 1.78, 1.30, 1.00, 0.74, 0.50	3.07	(F&R) 355 Disc	**3600**	Detachable Autoform hardtop shall be installed on convertible model (latches shall be replaced with positive fasteners), convertible top shall be removed. Throttle restrictor between each throttle body and plenum is mandatory: .060" flat steel plate with one **36 mm hole.** A .250" thick (max) steel or aluminum spacer is permitted between the throttle body and the restrictor to provide clearance for the throttle butterfly. This spacer shall replicate the dimensions of the stock throttle body flange (i.e. throttle bore, bolt pattern, idle-air bypass port dimensions, etc.) Throttle body spacer bore(s) shall be no larger than the stock throttle body bore diameter at the gasket surface, and shall not be radiused in any way. Throttle restrictor may include idle air control and/or PCV orifice. The following parts are allowed:, Mopar performance fan delete kit #P5153260, Phoenix SRT10 electric fan kit #PPI123321, Mopar swing oil pickup kit # 4510174, Trans. mount # P4510179, Dodge Motorsports T1 suspension kit part # P5153251 Hypercoil springs #188A0750 (F) and 188A0800 (R) are allowed. B&M Shifter (PN45055) is permitted. Oil pan part #5037735AC, oil pick up part #5038022AB, oil pick up tube part #5037312AE are allowed.
Ford Mustang Boss 302 (2012);	92.220 x 92.7 4957	2720	18 X 11 (F) 18 x 11 (R)	315/35 (F) 315/35 (R)	3.66, 2.43, 1.69, 1.32, 1.00, 0.65	3.73	(F) 355 x 32.1 Vented (R) 300 x 19.2 Vented	3500	The following parts are allowed: GT/CS Front Fascia #BR3Z-17626-AA, GT/CS Rear Fascia #AR3Z-17F828-AA, Ford Accessories Spoiler #AR3Z-6344210-CA, 14" Brembo Brake Kit #M-2300-S, Rear Axle Cover #M-4033-K, Spring Kit #M-5300-A (M-5310-A front, M-5560-A rear), Strut Tower Brace #M-20201-S197, Swaybar Kit #M-5490-A, Jounce Bumper Kit # M-5570-A, Panhard Bar #M-4264-A, Rear Lower Control Arms #M-5649-R1, Rear Upper Shock Mount #M-18197-A. *Ford Racing oil pan #M-6675-M50BR permitted. Alternate metallic driveshaft is allowed.* **Flat plate restrictor 65 mm**
Ford Mustang GT 5.0L (10-12)	(92.220) x (92.7) / (4957)	107.1	18 x 10 (F) 18 x 10 (R)	295/35	3.66, 2.43, 1.69, 1.32, 1.00, .65	3 . 3 1 3.73	(F) (355) x (32.1) Vented (R) (300) x (19.2) Vented	***3500***	The following parts are allowed: GT/CS Front Fascia #BR3Z-17626-AA, GT/CS Rear Fascia #AR3Z-17F828-AA, Ford Accessories Spoiler #AR3Z-6344210-CA, 14" Brembo Brake Kit #M-2300-S, Rear Axle Cover #M-4033-K, Spring Kit #M-5300-A (M-5310-A front, M-5560-A rear), Strut Tower Brace #M-20201-S197, Swaybar Kit #M-5490-A, Jounce Bumper Kit # M-5570-A, Panhard Bar #M-4264-A, Rear Lower Control Arms #M-5649-R1, Rear Upper Shock Mount #M-18197-A. *Ford Racing oil pan #M-6675-M50BR permitted. Alternate metallic driveshaft permitted.* **Flat plate restrictor 70 mm**
Mitsubishi Lancer Eva 8/9 / RS / GSR / MR (03-06)	85.0 x 88.0 1997	2624	18 x 10 (F&R)	275/45 (F&R)	2.93, 1.95, 1.41, 1.03, 0.72 or 2.91, 1.94, 1.43, 1.10, 0.87, 0.69	4.53	(F) 276 / 320 Vented Disc (R) 284 / 300 Vented Disc	**3200 (3275** with paddle shift**)**	AMS front and rear springs #AMS-SCCA01 allowed or AMS front and rear spring kit #AMS-SCCA02 including Genesis Technologies 2" spacer allowed. Max spring rate (F) 800 lbs./in, (R) 900 lbs./in. Alternate AMS front sway bar permitted #AMS-SCCA-SBF02, alternate rear sway bar permitted #AMS-SCCA-SBR02. Evo X brakes allowed. **Turbo Inlet restrictor 45 mm**
Mitsubishi Lancer Evo X / GSR / MR (08-11)	86.0 x 86.0 1998	2650	18x10 (F&R)	275/45 (F&R)	2.857, 1.950, 1.444, 1.096, .761 or 3.655, 2.368, 1.754, 1.322, 1.008, .775,	4 . 6 8 7 or 4.062	(F) 350 Vented Disc (R) 330 Vented Disc	***3600** with/ or/without* paddle shifter	AMS front and rear springs SCCA01-EVO X – AMS. 2" Genesis Technologies spacers allowed. Alternate AMS front sway bar permitted #SCCA-SBF02 EVO X, alternate rear sway bar permitted #SCCA-SBR02 EVO X. Max spring rate (F) 800 lbs/in, (R) 900 lbs/in **Turbo Inlet restrictor 45 mm**
Nissan 370Z (09-11) / 370Z NISMO Edition (09-11)	95.5 x 86.0 3696	2550	19 x 10 (F) 19 x 10 (R)	275/30 (F) 275/35 (R)	3.79, 2.32, 1.62, 1.27, 1.00, .79	3.69	(F)320 x 28 Vented (R)320 x 16 Vented	***3100***	5300S-SS370 T-2 spring kit allowed; 54600-SS370 T-2 front and rear sway bar kit allowed. Sports Package is allowed. Springs up to 800#/in front and rear allowed. 54010-SZ350 (F) and 55020-SZ350 (R) allowed. Cold Air Intake allowed.

Pontiac Firebird (98-02)	99.0 x 92.0 5666	2568	17x10(F) 17x10(R)	275/40/17	2.66, 1.78, 1.30, 1.00, 0.74, 0.50	3.42	(F) 300 Vented Disc (R) 302 Vented Disc	3250	Power steering cooler (option code V12) is permitted. Severn Canton accusump part #CA24024 or CA24006, along with Electric solenoid W/ epc #CA24273, Ac¬cusump Check Valve #CA2428, and Wheel to Wheel Adapter block # 0760-50001, and related hoses and mounting brackets are permitted. Z28 can use original hood. Strano Performance Camaro Track Package (Part #SP- 141, Spring Set (550# Front/150#Rear); Part #SP-8316. Front Sway Bar (1-3/8" or 35mm); Part #SP-8327, Rear Sway Bar (7/8" or 22mm); Part #UMI-2006,Strut Tower brace, 2 pt, 1.25" OD) permitted. Springs up to 800#/in front and rear allowed. Cold Air Intake allowed.
Pontiac Solstice GXP Coupe / Convertible (07-09)	85.3 x 86.1 1998	2415	18 x 9.5	275/35	3.75, 2.26, 1.51, 1.00, .73	3.73	(F)296 Vented (R)278 Solid	***3000***	Detachable hardtop GM part #PCS-0664 shall be installed and convertible top shall be removed. Suspension option ZOK and Rear Spoiler (D52) allowed. Brake calipers and rotors from Chevrolet Cobalt SS (08-09) permitted. Any aftermarket top allowed, if material, size, shape and weight are the same as the factory top. **Turbo Inlet restrictor 43 mm**
Porsche 911/ 997 GT3 (03-05)	100.1 x 76.5 3600	2355	18 x 8.5 (F) 18 x 11 (R)	235/40 (F) 295/30 (R)	3.82, 2.15, 1.56, 1.21, 1.00, 0.85	3.44	(F) 350 Vented Disc (R) 330 Vented Disc	**3300**	Ducting for coolers is free, provided it doesn't change size and/or shape of factory body panels. Ducting of air to rotors is allowed Removal of rotor dust shields is allowed. Tender springs 60-60-25, and spring holders ZT-1-X002A01 allowed. Springs up to 800#/in front and 1000 #/in rear allowed. Sway bar size and configuration is free. Spoilers & bumper/airdams are free provided they do not exceed the max. body width by any amount and/or the max. body length by more than 1". Rear wings may be no higher, relative to the roofline, than a factory, non-extended, 3.8 RSR wing. Camber adjustment slots may be elongated. Porsche Motorsport front and rear control arms allowed **65 mm flat plate restrictor is required**
Porsche 911 / 996 (98-05)	96.0 x 78.0 3400 100.1 x 76.5 3600	2454	18 x 8.5 (F) 18 x 11 (R)	245 (F), 295 (R)	3.82, 2.20, 1.52, 1.22, 1.02, 0.84	3.44	(F) 318 Disc (R) 299 Disc	*3200*	Ducting for coolers is free, provided it doesn't change size and/or shape of factory body panels. Springs up to 800#/in front and 1000 #/in rear allowed. Ducting of air to rotors is allowed. Tender springs 60-60-25, and spring holders ZT-1-X002A01 allowed. Removal of rotor dust shields is allowed. Sway bar size and configuration is free Spoilers & bumper/airdams are free provided they do not exceed the max. body width by any amount and/or the max. body length by more than 1". Rear wings may be no higher, relative to the roofline, than a factory, non-extended, 3.8 RSR wing. Camber adjustment slots may be elongated. Porsche Motorsport front and rear control arms allowed.
Porsche Cayman S (2006-2008)	96.0 x 78.0 3387	2416	18 x 9 (F) 18 x 10 (R)	245/40 (F) 295/40 (R)	3.31, 1.95, 1.41, 1.13, 0.97, 0.82	3.88	(F) 318 Vented and Cross-drilled (R) 299 Vented and Cross-drilled	*3000*	Ducting for coolers is free, provided it doesn't change size and/or shape of factory body panels. Springs up to 800#/in front and 1000 #/in rear allowed . Ducting of air to rotors is allowed. Removal of rotor dust shields is allowed. Sway bar size and configuration is free Spoilers & bumper/airdams are free provided they do not exceed the max. body width by any amount and/or the max. body length by more than 1". Rear wings may be no higher, relative to the roofline, than a factory, non-extended, 3.8 RSR wing. Camber adjustment slots may be elongated. Porsche Motorsport rear control arms allowed.
Porsche Cayman S (2010)	96.0 x 78.0 3387	2416	18 x 9 (F) 18 x 10 (R)	245 (F), 295 (R)	3.31, 1.95, 1.41, 1.13, 0.97, 0.82	3.88	((F) 318 Vented and Cross-drilled (R) 299 Vented and Cross-drilled	*3100*	Ducting for coolers is free, provided it doesn't change size and/or shape of factory body panels. Springs up to 800#/in front and 1000 #/in rear allowed . Ducting of air to rotors is allowed. Removal of rotor dust shields is allowed. Spoilers & bumper/airdams are free provided they do not exceed the max. body width by any amount and/or the max. body length by more than 1". Rear wings may be no higher, relative to the roofline, than a factory, non-extended, 3.8 RSR wing. Sway bar size and configuration is free Camber adjustment slots may be elongated. Porsche Motorsport rear and front control arms allowed. PDK allowed.
Saturn Sky / Convertible (07-09)	85.3 x 86.1 1998	2415	18 x 9.5	275/35	3.75, 2.26, 1.51, 1.00, .73	3.73	(F)296 Vented (R)278 Solid	***3000***	Detachable hardtop GM part #PCS-0664 shall be installed and convertible top shall be removed. Suspension option ZOK and Rear Spoiler (D52) allowed. Brake calipers and rotors from Chevrolet Cobalt SS (08-09) permitted. Any aftermarket top allowed, if material, size, shape and weight are the same as the factory top. **Turbo Inlet restrictor 43 mm**
Subaru Impreza WRX STi (03-07)	99.5 x 79.0 2457	2540	18 x 10	275/40	3.64, 2.38, 1.76, 1.35, 0.97, 0.76	3.9	(F) 323 Vented Disc (R) 313 Vented Disc	**3400**	The following parts are allowed: Phoenix Performance brake duct kit # IPBK01. AMS front and rear springs #AMS-SCCA-STiST1 allowed. Front Sway bar Whiteline PN #BSF36XXZ and Rear Sway bar Whiteline PN #BSF37XZ allowed. Racecomp Brake duct kit part #RCE-CFKBK is allowed. Baldwin Motors spring package part BMI-T2SP1, permitted. Max spring rate (F) 800 lbs/in, (R) 900 lbs/in. **Turbo Inlet restrictor 45 mm Cold Air Intake allowed.**
Subaru Impreza WRX STi (08-11)	99.6 x 79.0 2457	2624	18 x 10	275/45	3.64, 2.24, 1.52, 1.14, 0.97, 0.76	3.90 Front 3.55 Rear	(F)326 Vented (R)316 Vented	**3300**	800 psi front springs, 900 psi rear springs, 25mm front sway bar, 22mm rear sway bar permitted. **Turbo Inlet restrictor 45 mm Cold air intake allowed.**

All Cars is class permitted the following changes:

- No Interiors
- Shocks Open **After market Springs and sway bars assigned on a case-by-case basis**
- **Maximum 3.0** degrees of negative chamber is allowed on front and rear suspensions. Strut suspensions may decamber wheels by the use of eccentric bushings, eccentric bolts (crash bolts) at the strut-to-spindle, and/or by use of slotted adjusters at the top of the strut mounting plate. If upper strut slotted plates are used, they shall be located on existing chassis structure, utilizing the manufacturer's original bolt holes and may not serve as reinforcement for that

structure. On other forms of suspension, camber adjustment may be achieved by the use of shims and/or eccentric bushings. Slotted ball joints on A-arms on double wishbone cars may be used for camber adjustment only.

- **OEM ECU only (Re-Flashing permitted)**
- Sway bars not specified, may be requested
- Parking Brake Assemblies may be removed
- Cold air intakes and headers may be allowed on a case by case basis to help maintain parity
- Cars over 3400 lbs. may be permitted to run up to a 9" wheel 275 sized tire unless specified

CLASS T3	Bore x Stroke(mm)/ Displ. (cc)	Wheel-base (mm)	Max Wheel Size (inch)	Tire Size	Gear Ratios	Final Drive	Brakes (mm)	Weight (lbs)	Notes:
ACURA TL TYPE S (07-08)	89.0 x 93.0 3471	2740	17 x **9**	275/45 (F&R) Max	3.93, 2.48, 1.70, 1.25, 0.98, 0.77	3.29	(F) 310 Vented Disc (R) 282 Solid Disc	3600	H&R front springs (1027 lb/in) #180-60-180, rear springs (1827 lb/in) #120-60-320, and 24 mm rear sway bar Progressive Technology #62.0110 allowed.
ACURA TL SH-AWD (2010-13)	90.065 x 96.1 3664	2776	19 X 9 (F) 19 x 9 (R)	275/45 (F&R) Max	3.63, 2.12, 1.53, 1.13, 0.85, 0.69	3.84	(F) 320 x 28 Vented (R) 334 x 11 Solid	3450	1000 lb/in springs maximum permitted (F&R), part numbers H&R R25081000 or RF200180 or Eibach 0800.225.1000. 24mm rear anti-sway bar permitted, part number Progress 62.0111. The glass sunroof must be replaced with a metal panel; the panel must be the same thickness as the roof material; the panel must retain the shape of the glass sunroof and must be painted in body color.. Brake package may include the following StopTech part numbers: 36.061.7419, 39R.061.7413, 39R.061.7414, 31.737.1101.87, 31.737.1102.87, 379.438.8131, 379.438.8132.
AUDI S4 (10-11)	84.5 x 89.0 2995	2809	18 X 9 (F&R)	255/35 (F&R)	3.67, 2.16, 1.52, 1.13, 0.92, 0.78	3.88	(F) 320 Vented (R) 286 Vented	3430	40 mm flat plate restrictor required. S tronic transmission permitted at 3480 lbs., Ratios: 3.692, 2.238, 1.559, 1/175, 0.915, 0.745, 0.617 . Max spring rate 600#/in front and rear.
AUDI TTS COUPE (10-11)	82.5 x 92.8 1984	2468	18 X 9 (F&R)	235/35 (F&R)	2.92, 1.96, 1.40, 1.03, 1.08, 0.87	4.77 (1-4) 3.44 (5-6)	(F) 340 Vented (R) 310 Vented	3200	32 mm turbo inlet restrictor required. Max spring rate 600#/in front and rear.
BMW M3 (01-06)	87.0 x 91.0 3246	2731	18 x 9 (F) 18 x 9 (R)	255/35 (F & R)	4.23, 2.53, 1.67, 1.23, 1.00, 0.83	3.62	(F) 325 x 28 Vented Disc (R) 328 x 20 Vented Disc	3500	Factory paddle shifter is permitted. Turner Motorsports Suspension package #TMST2M3 allowed. This consists of front springs TMS600-10-250, rear springs TMS650-8-250, front sway bar #TMSF23.235, rear sway bar #TMSR23.327. Euro Header part #11 62 7 833 500 and 62 7 833 501 allowed. 48mm restrictor required. Restrictor must be placed in the front of the factory engine air intake manifold opening. The plate must seal the opening so that all air entering passes through the restrictor.
BMW 135i (08-13)	84.0 x 89.6 2679	2761	(F) 18 x **9** (R) 18 x 9	(F) 225/40 (R) 255/35	4.00, 2.40, 1.58, 1.19, 1.00, 0.87	3.08	(F) 348 Vented Disc (R) 336 Vented Disc	3680	ZSP suspension package allowed. Sport seat package allowed. (2) 30 mm Turbo Inlet Restrictor required. Max spring rate 600#/in front and rear.
BMW 335i (08-13)	84.0 x 89.6 2679	2761	(F) 18 x **9** (R) 18 x 9	(F) 225/40 (R) 255/35	4.00, 2.40, 1.58, 1.19, 1.00, 0.87	3.08	(F) 348 Vented Disc (R) 336 Vented Disc	3680	ZSP suspension package allowed. Sport seat package allowed. (2) 30 mm Turbo Inlet Restrictor required. Max spring rate 600#/in front and rear.
BMW 330i/Ci (01-03)	84.0 x 89.6 2979	2726	17 x 9 (F&R)	225/35	4.21, 2.45, 1.66, 1.24, 1.00	2.93	(F) 325 x 28 Vented Disc (R) 325 x 20 Vented Disc	3235	Racing Dynamics sway bar set (24mm & 21mm bars (one each)) is permitted. Max spring rate 600#/in front and rear.
BMW Z4 3.0L (03-04)	84.1 x 89.7 2986	2494	17 x **8** (F&R)	225/45	4.35, 2.50, 1.66, 1.24, 1.00, 0.85	3.07	(F) 300 Vented Disc (R) 294 Vented Disc	3000	Detachable hardtop shall be installed (latches shall be replaced with positive fasteners), convertible top shall be removed.
BMW Z4 M Coupe (2007)	87.0 x 91.0 3246	2497	(F) 18 x **9** (R) 18 x 9	255/35 (F & R)	4.35, 2.50, 1.67, 1.23, 1.00, 0.85	3.62	(F) 345 Vented Disc (R) 328 Vented Disc	3500	Euro manifold part #11 62 7 833 500 and 62 7 833 501 allowed. Turner springs permitted: front TMS600-10-250, rear TMS650-8-250; Ground control # MZ4Swaybar set permitted. 45mm restrictor required. Restrictor must be placed in the front of the factory engine air intake manifold opening. The plate must seal the opening so that all air entering passes through the restrictor.
BMW Z4 3.0si Coupe (07-08)	85.1 x 87.9 2996	2495	18 x **8**(F&R)	225/45	4.35, 2.50, 1.66, 1.23, 1.00, 0.85	road-ster: 3.23 coupe: 3.46.	(F) 325 x 12.8 Vented Disc (R) 294 x 11.6 Solid Disc	**3150**	May use H&R springs: front RF160090, rear RF160100; rear spring height adjusters: Turner #HR92-K-X-011A01; H&R sway bar kits: front 70276 27mm, rear 71276 21mm
Buick Regal (2011+)	86.0 x 86.0 1998	2631	18 x **8** (F) 18 x **8** (R)	**235/45 (F) 235/45 (R)**	3.38, 1.76, 1.18, 0.89, 0.70	4.05	(F) 315 Vented Disc (R) 292 Solid Disc	**3000**	36mm Turbo Inlet Restrictor required Front control arms # CCS636 and CCS637 permitted. Any spring up to a maximum spring rate of 800 pounds may be used
Chevrolet Camaro V6 (2010+)	94.0 x 85.6 3564	2853	20 x 9.5 (F&R)	275/45 max	4.48, 2.58, 1.63, 1.19, 1.00, .75	3.27	(F)337 x 30 Vented Disc (R) 315 x 23 Vented Disc	3400	

Chevrolet Cobalt (05-07)	86.0 x 86.1 1998	2629	18 X 8 (F&R)	235/45	3.38, 1.76, 1.18, 0.89, 0.71	4.05	(F) 296 Vented Disc (R) 270 Solid Disc	3050	The following GM parts are allowed: front springs part # CCS635, rear springs # CCS639, front control arms # CCS636 and CCS637, shrouding kit # CCS644. Griffin radiator # 9D-18194-01 allowed. Stage Three Supercharger kit, part #88958719 permitted. Optional rear sway bar max 42 mm (body and suspension mounting same as OEM). AEM cold-air intake (part# 21-532C) is permitted. Any spring up to a maximum spring rate of 800 pounds may be used Brake calipers and rotors from Chevrolet Cobalt SS (08-10) permitted.
Chevrolet Cobalt SS (08-10)	85.3 x 86.1 1998	2631	*18 x 8*	**235/45**	3.38, 1.76, 1.18, 0.89, 0.70	4.05	(F) 315 Vented Disc (R) 292 Solid Disc	3050	Rear sway bar max 42 mm (body and suspension mounting same as OEM), GM Part #55206797 sensor allowed, Any spring up to a maximum spring rate of 800 pounds may be used. Front control arms # CCS636 and CCS637. Turbo Inlet Restrictor 35 mm
Dodge SRT-4 (03-05)	88.0 x 101.1 2458	2667	*17 x 8 (F&R)*	**235/45**	3.47, 2.05, 1.37, 0.97, 0.76	3.53	(F) 280 Vented Disc (R) 220 Solid Disc	**3000**	C & R Heavy Duty Radiator a/ Spal fan, part # 4051110300-DP allowed. 35mm turbo inlet restrictor required. Any spring up to a maximum spring rate of 800 pounds may be used. Rear sway bar max 42 mm (body and suspension mounting same as OEM),
Ford Focus ST (2013+)	87.5 x 83.1 2000	2649	*18 x 8 (F&R)*	*235/45*	3.38, 2.00, 1.32, 1.00, 0.675	3.xx	(F) 315 Vented Disc (R) 292 Solid Disc	**3100**	35mm turbo inlet restrictor required. Any spring up to a maximum spring rate of 800 pounds may be used. Optional rear sway bar max 42 mm (body and suspension mounting same as OEM)
Ford Mustang Mach I (03-04)	90.2 x 90.0 4601	2720	*18 x 9 (F&R)*	275(max) (F&R)	3.38, 2.00, 1.32, 1.00, 0.62	3.55	(F) 316 / 355 Vented Disc (R) 300 Vented Disc	**3500**	Bullitt springs allowed p/n 1R3Z-5310-CA (F), 1R3Z-5560-AA ®. Steeda springs (F) 223-121-1000, (R) 223-SAM350RSR, rear sway bar 006-470, front sway bar bushings 122-4-5135-G, strut brace 555-5714, clutch cable 555-7041 and 555-7025, Cobra R brakes permitted. A flat plate restrictor with two 40 mm holes required directly behind throttle body.
Ford Mustang Coupe GT & Shelby GT 4.6L (05-10)	90.2 x 90.0 4601	2720	*18 x 9 (F&R)*	275(max) (F&R)	3.38, 2.00, 1.32, 1.00, 0.675	3.55 or 3.73	(F) 316 / 355 Vented Disc (R) 300 Vented Disc	**3500**	The following parts are allowed: Strut tower brace part #M20201-S197, Radiator #M-8005-S197, Ford Spring kit M-5300-K, sway bars M-5490-A, damper kit M-18000-A. A flat plate restrictor with two 40 mm holes required directly behind throttle body.
Ford Mustang V6 (11-13)	(95.490) x (86.70) / 226 CID	107.1	18 x 9.5	275(max) (F&R)	4.24, 2.54, 1.67, 1.24, 1.00, .70	3.31 or 3.55	(F) (316) x (30.0) Vented (R) (300) x (19.2) Vented	**3450**	The following parts are allowed: Ford Accessories Spoiler #AR3Z-6344210-CA Rear Axle Cover #M-4033-K, Spring Kit #M-5300A (M-5310-A-Front, M5560-A Rear), Strut Tower Brace #M-20201-S197, Swaybar Kit #M-5490, Jounce Bumper Kit # M-5570-A, Panhard Bar #M-4264-A, Rear Lower Control Arms #M-5649-R1, Rear Upper Shock Mount #M-18197-A. Boss 302R Steering EPAS Steering rack #M-3200-EPAS, Boss 302R/S ABS Module #M2353-C. 14" Brembo Brake Kit #M-2300-S permitted. Driveshaft from Alternate metallic driveshaft is allowed. Prothane front control arm bushings 6-220 and 6-218 and differential bushing 6-315 allowed.
Honda S2000 (all) (00-09)	87.0 x 90.7 2157	2400	18 x 8.5 (F/R)	245/50 Max	3.13, 2.05, 1.48, 1.16, 0.97, 0.81 or 3.13, 2.05, 1.48, 1.16, 0.94, 0.76	4.1	(F) 300 Disc (R) 282 Disc	2.0L @ 2800 2.2L @ 2850	Detachable hardtop shall be installed (latches shall be replaced with positive fasteners), convertible top shall be removed. Factory bolt-in roll bar may be removed to facilitate the installation of the req'd roll cage. Comptech differential housing part #550-040 allowed. Springs and sway bars from 2008 S2000 CR allowed. CR front fascia, rear deck lid, and wing are permitted. Spring rate 600 lbs/in maximum allowed. Updating and backdating of flywheels between engine types is prohibited.
Hyundai Genesis Coupe (2010+)	86.0 x 86.0 1998	2819.4	19 x **8** (F) 19 x **8** (R)	245/50 (F) Max 245/40 (R) Max	4.229, 2.467, 1.671, 1.233, 1.000, 0.794	3.909	340.4 (F) 330.2 (R)	3200	31mm Turbo Inlet Restrictor required; Track Pack allowed
Lotus Exige S / S220 / Elise SC (07-10)	82.0 x 85.0 / 1796	2301	16x6.5 (F) 17x7.5 (R)	195/50 (F) 225/45 (R)	3.17, 2.05, 1.48, 1.17, 0.92, 0.81	4.53	(F) 288 Vented Disc (R) 288 Vented Disc (F) 308 Vented Disc (R) 288 Vented Disc	2200 S220: 2500	An SCCA approved welded steel cage that is bolted to the chassis/frame is allowed. The floor may be modified to facilitate the rollcage mounting points. The stock extruded aluminum chassis satisfies the requirement for forward anti-intrusion braces. The factory roll hoop shall be replaced with a single continuous hoop. Sway bar #A120L0020F, spring front #A120C0019H, spring rear #A120D0047H allowed. Lotus Elise oil accumulator system part # ALS3E0022J (accusump part #24026 and electric valve part #24270) is allowed. Lotus Track use chassis brace kit #lotac05377 allowed. Moroso Oil Pan part # 20970 is allowed. G-PAN Baffled Oil Pan is allowed. Rear cage braces may pass through rear window. Front spring, Eibach part # 600.225.0475 and rear spring, Eibach part # 800.225.0650 allowed. Lotus Exige (2006) may be supercharged by meeting all specifications in this classification.
Lotus Elise (05-10)	82.0 x 85.0 1796	2301	*16x8 (F) 17x8 (R)*	195/50 (F) 225/45 (R)	3.12, 2.05, 1.48, 1.17, 0.96, 0.82	4.53	(F) 288 Vented Disc (R) 288 Vented Disc	2150	Detachable hardtop shall be installed (latches shall be replaced with positive fasteners), convertible top shall be removed. An SCCA approved welded steel cage that is bolted to the chassis/frame is allowed. The floor may be modified to facilitate the rollcage mounting points. The stock extruded aluminum chassis satisfies the requirement for forward anti-intrusion braces. The factory roll hoop shall be replaced with a single continuous hoop. Lotus Elise oil accumulator system part # ALS3E0022J (accusump part #24026 and electric valve part #24270) is allowed. Lotus Track use chassis brace kit #lotac05377 allowed. Sway bar #A120L0020F, spring front #A120C0019H, spring rear A120D0047H allowed. Moroso Oil Pan part # 20970 is allowed. G-PAN Baffled Oil Pan is allowed. Rear cage braces may pass through rear window. Front spring, Eibach part # 600.225.0475 and rear spring, Eibach part # 800.225.0650 allowed.

Lotus Exige (2006)	82.0 x 85.0 1796	2301	16x6.5 (F) 17x7.5 (R)	195/50 (F) 225/45 (R)	3.12, 2.05, 1.48, 1.17, 0.96, 0.82	4.53	(F) 288 Vented Disc (R) 288 Vented Disc	2150	An SCCA approved welded steel cage that is bolted to the chassis/frame is allowed. The floor may be modified to facilitate the rollcage mounting points. The stock extruded aluminum chassis satisfies the requirement for forward anti-intrusion braces. The factory roll hoop shall be replaced with a single continuous hoop. Lotus Elise oil accumulator system part #ALS3E0022J (accusump part #24026 and electric valve part #24270) is allowed. Lotus Track use chassis brace kit #lotac05377 allowed. Sway bar #A120L0020F, spring front #A120C0019H, spring rear A120D0047H allowed. Moroso Oil Pan part # 20970 is allowed. G-PAN Baffled Oil Pan is allowed. Rear cage braces may pass through rear window. Front spring, Eibach part # 600.225.0475 and rear spring, Eibach part # 800.225.0650 allowed. *Sector 111 Eliminator V3 permitted to replace rear panel.*
Mazda Mazdaspeed3 (07-09)	87.5 x 94.0 2260	2639	18 x 8 (F & R)	235/50	3.54, 2.24, 1.54, 1.17, 1.09, 0.85	1-4: 3.94 5-6: 3.35	(F) 300 Vented Disc (R) 280 Solid Disc	3000	35mm Turbo Inlet restrictor required- Rear sway bar max 42 mm (body and suspension mounting same as OEM . Any spring up to a maximum spring rate of 800 pounds may be used
Mazda Mazdaspeed3 (10-13)	87.5 x 94.0 2260	2309	18 x 8 (F & R)	235/50	3.21, 1.91, 1.37, 1.03, 0.95, 0.79	1-4: 4.19 5-6: 3.53	(F) 320 Vented Disc (R) 280 Solid Disc	3000	35mm Turbo Inlet restrictor required. Rear sway bar max 42 mm (body and suspension mounting same as OEM) . Any spring up to a maximum spring rate of 800 pounds may be used.
Mazda MazdaSpeed Miata (04-05)	83.0 x 85.0 1839	2266	18 x 8 (F) 18 x 8 (R)	245/45 max	3.76, 2.27, 1.65, 1.26, 1.00, 0.84	4.10	(F) 269 Vented Disc (R) 277 Solid Disc	2600	Detachable hardtop shall be installed. Latches shall be replaced with positive fasteners. Convertible top assembly shall be removed. Mazdaspeed radiator part # 0000-01-5503 and suspension kit #K-SPEC-M5-SUS9 allowed. Canton Accusump #24-026, Flex-a-lite install sandwich #3965, and related hoses, valve, and bracket allowed. Bell Engineering (BEGi) intercooler kit permitted #67022. Complete kit includes throttle inlet tube, cool air box and Forge Motorsports diverter valve. Kit must be used as a whole, including all hardware.
Mitsubishi Lancer Ralliart (2009-2011)	86 x 86 1998	2635	18 x 8	245/45	3.15, 1.94, 1.39, 1.06, 0.81, 0.63	4.06	(F) 305 Vented disc (R)278 Solid disc	3400	37mm turbo inlet restrictor required. Springs up to 800 #/in allowed. Rear sway bar max 42 mm (body and suspension mounting same as OEM.
Nissan 350Z Track/ Touring/ Standard/ Nismo (03-08)	95.5 x 81.4 3498	2649	18 x 9 (F) 18 x 10 (R)	275/30 (max) (F&R)	3.79, 2.32, 1.62, 1.27, 1.00, 0.79	3.54	(F) 296/324 Vented Disc (R) 292/332 Vented Disc	DE Motor: 3200 HR Motor: 3275	The following are allowed: Track option Aero package, Rear diff cover Nismo part #99996-35TDK, Nissan Mtspts. Nissan heavy duty spring kit part #99996-65Z3OUS, Nismo sway bar kit #99996-RSZ3OUS.
Nissan 350Z Track/ Touring/ Standard/ Nismo (03-08) Spec	95.5 x 81.4 3498	2649	18 x 9 (F) 18 x 10 (R)	275/30 (max) (F&R)	3.79, 2.32, 1.62, 1.27, 1.00, 0.79	3.54	(F) 296/324 Vented Disc (R) 292/332 Vented Disc	DE Motor: 3250 HR Motor: 3350	Nissan Motorsports: Shock Front left P/N E6110-SZ350 & Front right E6111-SZ350 & rear E6210-SZ350, Springs front P/N 54010-SZ350 & rear 55020-SZ350, F&R 5600S-SZ350, Front roll bar #54611-SZ350, Rear roll bar #562300-SZ350, Bushings P/N (54541, 54560, 55045, 55148, 55149, 55152, 55153, 55158, 56218) - RRZ30 allowed. Nismo flywheel permitted.
Nissan 370Z (09-11) / 370Z NISMO Edition (09-11)	95.5 x 86.0 3696	2550	19 x 9 (F) 19 x 10 (R)	275/30 (F) max 275/35 (R) max	3.79, 2.32, 1.62, 1.27, 1.00, .79	3.69	(F)320 x 28 Vented (R)320 x 16 Vented	***3275***	5300S-SS370 T-2 spring kit allowed; 54600-SS370 T-2 front and rear sway bar kit allowed. Sports Package is allowed. 2 - 38 mm flat plate restrictors required.
Saturn Ion Redline (04-07)	86.0 x 86.1 1998	2629	18 x 8 (F & R)	235/45	3.38, 1.76, 1.18, 0.89, 0.71	4.05	(F) 296 Vented Disc (R) 270 Solid Disc	**3050**	The following GM parts are allowed: front springs part # CCS635, rear springs # CCS639, front control arms # CCS636 and CCS637, shrouding kit # CCS644. Griffin radiator # 9D-18194-01 allowed. Stage Three Supercharger kit, part #88958719 permitted. Optional rear sway bar max 42 mm (body and suspension mounting same as OEM). AEM cold-air intake (part# 21-532C) is permitted. Any spring up to a maximum spring rate of 800 pounds may be used Brake calipers and rotors from Chevrolet Cobalt SS (08-10) permitted.
Volkswagen GTI, Jetta GLI (06-10)	82.5 x 92.8 1984	2578	17 x 8 (F&R)	235/45 (F&R)	DSG: 3.46, 2.15, 1.46, 1.08, 1.10, 0.92 STD: 3.36, 2.09, 1.47, 1.10, 1.11, 0.93	DSG: 4.10 / 3.14 STD: 4.00, 3.09	(F) 312 Vented Disc (R) 286 Solid Disc	DSG @ 3100 STD @ 3050	Rear sway bar max 42 mm (body and suspension mounting same as OEM), Any spring up to a maximum spring rate of 800 pounds may be used. Turbo Inlet Restrictor 35 mm

All Cars is class permitted the following changes:

- No Interiors
- Shock/Springs OEM only, unless specified
- **Maximum 2.5** degrees of negative camber is allowed on front and rear suspensions.
- **OEM ECU only (Re-Flashing permitted)**
- Sway bars not specified, may be requested
- For the SSC cars moving up, the following updates are allowed in addition to the above allowances.
    1. LSD

2. Aftermarket 7” wide wheels, minimum of 15 lbs.
3. Cold Air Intake
4. Non-adjustable shocks w/ threaded bodies
5. Catalytic converter removal
6. **OEM Bump stops**
7. 500 #/in max springs for strut cars, 800 #/in max springs for double wishbone cars.
8. 32mm OEM style rear sway bar allowed.

CLASS (T4)	Bore x Stroke(mm)/ Displ. (cc)	Wheel-base (mm)	Track F & R (mm)	Wheel Size(in.)/ Mat'l.	Tire Size (stock)	Gear Ratios	Final Drive	Brakes (mm)	Weight (lbs)	Notes:
Acura Integra GS-R VTEC (3 or 4 door) (94-01)	81.0 x 87.2 1797	2571	1476 / 1471	15 x 7	205/50	3.23, 1.90, 1.36, 1.03, 0.79	4.4	(F) 262 x 21 Vented disc (R) 239 x 10 Solid Disc	2625	*Engine breather hose may be routed to a catch can; the resultant opening in the air box must be plugged.* Any non-adjustable shock absorber is allowed. The shock must be installed in the original mounting locations. Remote shocks are not permitted. Threaded shock bodies or adjusters may be used. Any spring up to a maximum spring rate of 800 pounds front and 800 pound rear may be used Cold Air Intake system allowed. OEM optional limited slip differential permitted. 32mm OEM style and configuration rear sway bar allowed. Catalytic Converters may be removed.
Acura RSX Type-S (02-06)	86.0 x 86.0 1998	2570	1487 / 1486	17 x 7 (F&R)	215/45 (F&R)	3.27, 2.13, 1.52, 1.15, 0.92, 0.74	4 . 4 4.765	(F) 300 Vented Disc (R) 260 Solid Disc	2850	Factory limited slip from 06-08 Civic Si, P/N 41200-PNT-003 permitted. Acura suspension #08W60-56M allowed.
Audi A4 V-6 (96-01)	82.5 x 86.4 2771	2606	1496 / 1473	16 x 7 Alum	205/55	3.67, 1.99, 1.41, 1.00, 0.74	3.2	(F) 277 x 25 Vented Disc (R) 244 x 15 Solid Disc	3055	
BMW Z4 2.5L (03-05)	84.0 x 75.0 2494	2495	1473 / 1524	16 x 7 Alum	225/50	4.23, 2.52, 1.66, 1.22, 1.00	3.46	(F) 286 Vented Disc (R) 280 Solid Disc	3195	Detachable hardtop shall be installed (latches shall be replaced w/ positive fasteners), convertible top shall be removed. Alternate wheel BMW #36-11-1-095-058 16 x 7 is permitted.
Chevrolet Cobalt SS, Sport Coupe (06-10)	88.0 x 98.0 2384	2628	1492 / 1475	17 x 7 Alum	205/50	3.58, 2.02, 1.35, 0.98, 0.69	3.94	(F) 296 Vented Disc (R) 270 Solid Disc	2900	Any non-adjustable shock absorber is allowed. The shock must be installed in the original mounting locations. Remote shocks are not permitted. Threaded shock bodies or adjusters may be used. Any spring up to a maximum spring rate of 500 pounds front and 800 pound rear may be used. Cold Air Intake system allowed. OEM optional limited slip differential permitted. 32mm OEM style and configuration rear sway bar allowed. Catalytic Converters may be removed.
Chevrolet Camaro V-6 (96-02)	96.5 x 86.36 3790	2568	1552 / 1549	16 x 8	245/50	3.75, 2.19, 1.41, 1.00, 0.72	3.42	(F) 302 x 23 Disc (R) 305 x 25 Disc	3300	Performance option permitted, consisting of limited slip differential, up level steering rack, dual exhaust. GM PS cooler #10417037 allowed. Z-28 front sway bar (30mm) and rear sway bar (19mm) allowed. GM 1LE front (#26032907 32mm) and rear (#10021221 21 mm) sway bar allowed. Front spring rate shall be 280-320 lbs. per inch and the minimum free length is 13 ¾ inches. Koni Shocks, 8241-1139 (F) and 8241-1140 (R) permitted. *SP-141 front and rear springs permitted; SP-8316 front sway bar and SP-8327 rear sway bar permitted; UMI-2006 shock tower brace permitted.*
Chrysler Neon ACR SOHC (4 door) (01-02)	87.5 x 83.0 1995	2667	1474 / 1476	15 x 7 Alum	185/60	3.50, 1.96, 1.36, 0.97, 0.81	3.94	(F) 257 x 22 Vented Disc (R) 270 x 9 Solid Disc	**2500**	Any non-adjustable shock absorber is allowed. The shock must be installed in the original mounting locations. Remote shocks are not permitted. Threaded shock bodies or adjusters may be used. Any spring up to a maximum spring rate of 500 pounds front and 800 pound rear may be used - Cold Air Intake system allowed. OEM optional limited slip differential permitted. 32mm OEM style and configuration rear sway bar allowed. Catalytic Converters may be removed.
Ford Focus SVT (02.5-04)	84.0 x 88.0 2000	2616	1494 / 1486	17 x 7 Alum	215/45	(overall) 12.7, 7.7, 5.7, 4.6, 3.8, 3.1	2.88 & 4.25	(F) 300 Vented Disc (R) 280 Solid Disc	**2730**	*Engine breather hose may be routed to a catch can; the resultant opening in the air box must be plugged.* Any non-adjustable shock absorber is allowed. The shock must be installed in the original mounting locations. Remote shocks are not permitted. Threaded shock bodies or adjusters may be used. Any spring up to a maximum spring rate of 500 pounds front and 800 pound rear may be used Cold Air Intake system allowed. OEM optional limited slip differential permitted. 32mm OEM style and configuration rear sway bar allowed. Catalytic Converters may be removed.

CLASS (T4)	Bore x Stroke(mm)/ Displ. (cc)	Wheel-base (mm)	Track F & R (mm)	Wheel Size(in.)/ Mat'l.	Tire Size (stock)	Gear Ratios	Final Drive	Brakes (mm)	Weight (lbs)	Notes:
Ford Focus ZX4 ST (05-06)	87.38 X 93.98 2300	2614	1496 / 1491	16 x 7	205/60	3.42, 2.14, 1.45, 1.03, 0.77	3.82	(F) 278 Vented Disc (R) 251 Solid Disc	**2550**	*Engine breather hose may be routed to a catch can; the resultant opening in the air box must be plugged.* Any non-adjustable shock absorber is allowed. The shock must be installed in the original mounting locations. Remote shocks are not permitted. Threaded shock bodies or adjusters may be used. Any spring up to a maximum spring rate of 500 pounds front and 800 pound rear may be used Cold Air Intake system allowed. OEM optional limited slip differential permitted. 32mm OEM style and configuration rear sway bar allowed. Catalytic Converters may be removed.
Ford Mustang V6 (05-10)	100.4 x 84.4 4000	2724	1582.5 1587.5	16 x 7 17 x 8 (F&R)	245/40 (max tire size)	3.75, 2.19, 1.41, 1.00, 0.72	3.31	(F) 292.1 Vented Disc (R) 299.8 Vented Disc	3450	ABS (option code 552) allowed. FR3 Handling Pack # M-2007-FR3V6 allowed. The kit includes: Dampers M-18000-A, Lowering Springs M-5300-N, Sway Bars M-5490-C, Strut Tower Brace M-20201-F. The ECU may be re-flashed by a Ford dealer to disable the speed limiting function; a letter from the dealer stating that this, and only this change, has been made shall be made available to race officials on demand. Ford Positraction LSD part #M-4204-C75 is allowed. Panhard bar, part # BAR-M-4264-A permitted; must be set at same length as a stock bar, center mounting hole to center mounting hole +/- 0.25 inch. An alternative steel drive shaft is permitted; this drive shaft is otherwise unrestricted, but no modifications to other components are permitted to facilitate its installation.
Ford Mustang V-6 (01-04)	96.8 x 86.0 3797	2573	1529 / 1539	16 x 7.5 Alum	225/55	3.37, 1.99, 1.33, 1.00, 0.67	3.27		3240	Ford Positrac LSD, part # M-4204-C75, premium trim package 012A allowed (ABS, traction control, 16 x 7.5 forged or cast aluminum wheels).
Honda Accord LX & EX (03-07)	87.0 x 99.0 2354	2670	1 5 5 2 / 1554	16 x 6.5	205/60	3.27, 1.77, 1.15, 0.87, 0.66	4.39	(F)282 Vented Disc (R)259 Solid Disc	**2800**	Any non-adjustable shock absorber is allowed. The shock must be installed in the original mounting locations. Remote shocks are not permitted. Threaded shock bodies or adjusters may be used. Any spring up to a maximum spring rate of 800 pounds front and 800 pound rear may be used Cold Air Intake system allowed. OEM optional limited slip differential permitted. 32mm OEM style and configuration rear sway bar allowed. Catalytic Converters may be removed.
Honda Accord LX-S/EX/EX-L (08-09)	87.0 x 99.0 2354	2741	1580 / 1580	17 x 7.5	225/50	3.27, 1.78, 1.15, 0.87, 0.65	4.39	(F) 282 Vented Disc (R) 282 Solid Disc	**3100**	Any non-adjustable shock absorber is allowed. The shock must be installed in the original mounting locations. Remote shocks are not permitted. Threaded shock bodies or adjusters may be used. Any spring up to a maximum spring rate of 800 pounds front and 800 pound rear may be used Cold Air Intake system allowed. OEM optional limited slip differential permitted. 32mm OEM style and configuration rear sway bar allowed. Catalytic Converters may be removed.
99-00 Civic Coupe Si (99-00)	81 x 77.4 1595	2621	1476 / 1476	15 x 6	195/55	3.23, 2.11, 1.46, 1.11, 0.85	4.4	(F) 262 x 20 Disc (R) 239 x 8 Disc	**2530**	*Engine breather hose may be routed to a catch can; the resultant opening in the air box must be plugged.* Any non-adjustable shock absorber is allowed. The shock must be installed in the original mounting locations. Remote shocks are not permitted. Threaded shock bodies or adjusters may be used. Any spring up to a maximum spring rate of 800 pounds front and 800 pound rear may be used Cold Air Intake system allowed. OEM optional limited slip differential permitted. 32mm OEM style and configuration rear sway bar allowed. Catalytic Converters may be removed.
Honda Civic SI (02-03)	86.0 x 86.0 1998	2570	1468 / 1469	15 x 7 Alum	195/60	3.06, 1.77, 1.21, 0.92, 0.74	4.50	(F) 262 (R) 260	**2500**	*Engine breather hose may be routed to a catch can; the resultant opening in the air box must be plugged.* Any non-adjustable shock absorber is allowed. The shock must be installed in the original mounting locations. Remote shocks are not permitted. Threaded shock bodies or adjusters may be used. Any spring up to a maximum spring rate of 800 pounds front and 800 pound rear may be used Cold Air Intake system allowed. OEM optional limited slip differential permitted. 32mm OEM style and configuration rear sway bar allowed. Catalytic Converters may be removed.
Honda Civic Si (06-11)	86.1 x 86.0 1998	2649	1499 / 1527	17 x 7 Alum	215/45	3.27, 2.13, 1.52, 1.15, 0.92, 0.66	4.77	(F) 300 Vented Disc (R) 260 Solid Disc	3000	Honda Factory Performance Suspension Kit #08W60-SVB-100 allowed.
Honda Civic Si (2012)	87.0 x 99.0 2354	2620 (2 dr) / 2670 (4 dr)	1499/ 1522	17 x 7 Alloy	215/45	3.27, 2.04, 1.43, 1.07, 0.83, 0.65	4.76	(F)300 x 25 Vented (R) 260 x 9 Solid	3125	Honda Sport Suspension Kit, part number 08W60-TS9-100 permitted. H&R Sport Springs P/N 51891 allowed.
Hyundai Elantra GLS (11-12)	81.0 x 87.2 1797	2649	1550/ 1562	15 x 7	195/65	3.62, 1.96, 1.29, 1.02, 0.87, 0.76	4.33	(F) 280x23 Vented (R) 262x10 Solid	2400	Any non-adjustable shock absorber is allowed. The shock must be installed in the original mounting locations. Remote shocks are not permitted. Threaded shock bodies or adjusters may be used. Any spring up to a maximum spring rate of 500 pounds front and 800 pound rear may be used Cold Air Intake system allowed. OEM optional limited slip differential permitted. 32mm OEM style and configuration rear sway bar allowed. Catalytic Converters may be removed.

CLASS (T4)	Bore x Stroke(mm)/ Displ. (cc)	Wheel-base (mm)	Track F & R (mm)	Wheel Size(in.)/ Mat'l.	Tire Size (stock)	Gear Ratios	Final Drive	Brakes (mm)	Weight (lbs)	Notes:
Hyundai Tiburon V-6 (03-08)	86.7 x 75.0 2657	2530	1490 / 1490	17 x 7 Alum	215/45	3.15, 1.94, 1.33, 1.06, 0.86, 0.70	4.43	(F) 280 x26.2 Vented Disc (R) 257x10.0 Solid	**3150**	*Accusump permitted. Engine breather hose may be routed to a catch can; the resultant opening in the air box must be plugged.* Any non-adjustable shock absorber is allowed. The shock must be installed in the original mounting locations. Remote shocks are not permitted. Threaded shock bodies or adjusters may be used. Any spring up to a maximum spring rate of 500 pounds front and 800 pound rear may be used Cold Air Intake system allowed. OEM optional limited slip differential permitted. 32mm OEM style and configuration rear sway bar allowed. Catalytic Converters may be removed.
Kia Forte Koup and Sedan LX/ EX (2010-)	86.0 x 86.0 1998	2649	1560/ 1565	17 x 6 Alloy	205/55	3.31, 1.97, 1.19, 0.90, 0.70	4.19	(F) 280 Vented (R) 262 Solid	2590	Any non-adjustable shock absorber is allowed. The shock must be installed in the original mounting locations. Remote shocks are not permitted. Threaded shock bodies or adjusters may be used. Any spring up to a maximum spring rate of 500 pounds front and 800 pound rear may be used Cold Air Intake system allowed. OEM optional limited slip differential permitted. 32mm OEM style and configuration rear sway bar allowed. Catalytic Converters may be removed.
Kia Forte Koup and Sedan SX (2010-)	88.0 x 97.0 2359	2649	1560/ 1565	17 x 7 Alloy	215/45	3.27,1.93, 1.64, 1.22, 1.03, 0.83	4.06 (1, 2) 2.96 (3, 4, 5, 6)	(F) 300 Vented (R) 262 Solid	2970	. Any non-adjustable shock absorber is allowed. The shock must be installed in the original mounting locations. Remote shocks are not permitted. Threaded shock bodies or adjusters may be used. Any spring up to a maximum spring rate of 500 pounds front and 800 pound rear may be used Cold Air Intake system allowed. OEM optional limited slip differential permitted. 32mm OEM style and configuration rear sway bar allowed. Catalytic Converters may be removed.
Mazda3 s (04-09)	87.5 x 94.0 2260	2639	1529 / 1514	16x7 or 17x7	205/50 or 205/55	3.31, 1.84, 1.31, 0.97, 0.76	4.1	(F) 300 Vented DIsc (R) 280 Solid Disc	**2650**	ABS option allowed. Miata speedometer gear #M527-17-400A permitted. *Engine breather hose may be routed to a catch can; the resultant opening in the air box must be plugged.* Any non-adjustable shock absorber is allowed. The shock must be installed in the original mounting locations. Remote shocks are not permitted. Threaded shock bodies or adjusters may be used. Any spring up to a maximum spring rate of 500 pounds front and 800 pound rear may be used Cold Air Intake system allowed. OEM optional limited slip differential permitted. 32mm OEM style and configuration rear sway bar allowed. Catalytic Converters may be removed.
Mazda3 s (2010+)	89.0 x 100.0 2489	2640	1530 / 1514	17 x 7	205/50	3.45, 2.06, 1.39, 1.03, 0.84, 0.72	4.11	(F)300 Vented Disc (R)280 Solid Disc	**2915**	*Engine breather hose may be routed to a catch can; the resultant opening in the air box must be plugged.* Any non-adjustable shock absorber is allowed. The shock must be installed in the original mounting locations. Remote shocks are not permitted. Threaded shock bodies or adjusters may be used. Any spring up to a maximum spring rate of 500 pounds front and 800 pound rear may be used Cold Air Intake system allowed. OEM optional limited slip differential permitted. 32mm OEM style and configuration rear sway bar allowed. Catalytic Converters may be removed.
Mazda Protégé LX, ES (01-03)	83.0 x 92.0 1991	2610	1465 / 1470	15 x 7 Alum	195/50	3.31, 1.84, 1.31, 0.97, 0.76	4.11	(F) 259 x 23 Vented Disc (R) 201 x 36 Drum	2530	May update to MP3 specs. Any non-adjustable shock absorber is allowed. The shock must be installed in the original mounting locations. Remote shocks are not permitted. Threaded shock bodies or adjusters may be used. Any spring up to a maximum spring rate of 500 pounds front and 800 pound rear may be used Cold Air Intake system allowed. OEM optional limited slip differential permitted. 32mm OEM style and configuration rear sway bar allowed. Catalytic Converters may be removed.
Mazda Protégé 5 (02-03)	83.0 x 92.0 1991	2610	1465 / 1470	16 x 7 Alum	195/50	3.31, 1.84, 1.31, 0.97, 0.76	4.11	(F) 10.2 x .9 Vented Disc (R) 10.3 x .4 Solid Disc	2545	Any non-adjustable shock absorber is allowed. The shock must be installed in the original mounting locations. Remote shocks are not permitted. Threaded shock bodies or adjusters may be used. Any spring up to a maximum spring rate of 500 pounds front and 800 pound rear may be used Cold Air Intake system allowed. OEM optional limited slip differential permitted. 32mm OEM style and configuration rear sway bar allowed. Catalytic Converters may be removed.
Mazda RX-8, R3 (04-09)	2600	2703	TBA	18 X 8 (F&R)	2 2 5 / 4 5 (F&R)	3.76, 2.27, 1.65, 1.19, 1.0, 0.84 Alt: 3.82, 2.26, 1.54, 1.18, 1.00, 0.79	4.44 Alt: 4.78	(F) 323 Vented Disc (R) 303 Vented Disc	3300	Mazdaspeed radiator #0000-01-8501 allowed. Use of 2009 R3 transmission is permitted with alternate gear ratios as listed. R3 transmission must be paired with the listed alternate final drive. Catalytic converter may be removed.
Mazda MX-5 / Miata Sport (99-00)	83.0 x 85.0 1839	2266	1435 / 1461	15 X 7	195/50	3.14, 1.89, 1.33, 1.00, 0.81	4.3	(F) 255 Vented Disc (R) 252 Solid Disc	2450	Rear interior brace may be removed for cage installation. As delivered w/ no performance kits or parts deletions. Detachable hardtop shall be installed (latches shall be replaced with positive fasteners), convertible top shall be removed. Spec Miata front and rear sway bar permitted. Rear sway bar must use middle hole. Allow Spec Miata suspension kit. Any non-adjustable shock absorber is allowed. The shock must be installed in the original mounting locations. Remote shocks are not permitted. Cold Air Intake allowed. 32mm OEM style and configuration rear sway bar allowed.

CLASS (T4)	Bore x Stroke(mm)/ Displ. (cc)	Wheel-base (mm)	Track F & R (mm)	Wheel Size(in.)/ Mat'l.	Tire Size (stock)	Gear Ratios	Final Drive	Brakes (mm)	Weight (lbs)	Notes:
Mazda MX-5 / Miata (01-05)	83.0 x 85.0 1839	2266	15" wheel: 1435 / 1461 16" wheel: 1448 / 1474	16 x 7 Alum	15": 195/50 16": 205/45	3.14, 1.89, 1.33, 1.00, 0.81	4.3	(F) 254 Vented Disc (R) 252 Solid Disc Suspension Package: (F) 269.5 Vented Disc (R) 267.9 Solid Disc	2450	Factory "Sports" pkg. allowed. Optional Torsen limited slip differential allowed. Power steering delete option allowed. Detachable hardtop shall be installed (latches shall be replaced with positive fasteners), convertible top shall be removed. Spec Miata front and rear sway bar permitted. Rear sway bar must use middle hole. Allow Spec Miata suspension kit. Any non-adjustable shock absorber is allowed. The shock must be installed in the original mounting locations. Remote shocks are not permitted. Cold Air Intake allowed. 32mm OEM style and configuration rear sway bar allowed.
Mazda MX-5 (06-08)	87.38 x 83.06 1999	2329	1491 / 1496	16 x 7 17 x 7 Alum	205/50	3.14, 1.89, 1.33, 1.00, 0.81 or 3.82, 2.26, 1.64, 1.18, 1.00, 0.83	4.10	(F) 289.6 Vented Disc (R) 279.4 Solid Disc	MSR: 2600 Non-MSR: 2500	Detachable hardtop shall be installed (latches shall be replaced w/ positive fasteners), convertible top shall be removed. Factory bolt-in roll bar/cross member may be removed to facilitate roll cage installation. MSR option permitted. Any non-adjustable shock absorber is allowed. The shock must be installed in the original mounting locations. Remote shocks are not permitted. Threaded shock bodies or adjusters may be used. Front springs #0000-04-9700-08, rear springs #0000-04-9400-07, helper springs #0000-04-HLPR-EB, F/R sway bar kit #GRM5-8M-D16, front end links #0000-04-5499, rear end links #0000-04-5498. Mazda Motorsports Cold Air intake Part #0000-06-5150-KT allowed.
Mazda MX-5 (09-13)	87.4 x 83.1 2000	2330	1491/ 1497	17x7 Alum	205/45	3.82, 2.26, 1.64, 1.18, 1.00, 0.83 Or 3.14, 1.89, 1.33, 1.00, 0.81 (5 spd)	4.10	(F)290 Vented Disc (R)280 Solid Disc	**2600**	Detachable hardtop shall be installed (latches shall be replaced w/ positive fasteners), convertible top shall be removed. Factory bolt-in roll bar/cross member may be removed to facilitate roll cage installation. MSR option permitted. Any non-adjustable shock absorber is allowed. The shock must be installed in the original mounting locations. Remote shocks are not permitted. Threaded shock bodies or adjusters may be used. Front springs #0000-04-9700-08, rear springs #0000-04-9400-07, helper springs #0000-04-HLPR-EB, F/R sway bar kit #GRM5-8M-D16, front end links #0000-04-5499, rear end links #0000-04-5498. Mazda Motorsports Cold Air intake Part #0000-06-5150-KT allowed
Mazda6 s (03-07)	89.0 x 79.5 2967	2675	1530 / 1520	16 x 7 17 x 7 18 x 7	205/60 215/45	3.80, 2.13, 1.36, 0.94, 0.69	3.71	(F) 282 Vented Disc (R) 280 Solid Disc	**3300**	Rear sway bar: Mazdaspeed #GRMS-8M-L06-R and front sway bar #GRMS-8M-L06-F permitted.
Mini Cooper S (02-04)	77.0 x 85.8 1598	2467	1453 / 1461	16 x 7	195/55 or 205/55	4.17, 2.62, 1.97, 1.61, 1.33, 1.09	2.74	(F) 277 Vented DIsc (R) 259 Solid Disc	**2750**	JCW struts (F)31 31 6 768 410 (R)33 52 6 768 412, springs (F)31 33 6 768 415 (R)33 53 6 768 418, and Mini Mania strut tower plate NMS7300 permitted. Factory limited slip from 05-06 Cooper S permitted. May de-camber wheels by the use of slotted adjusters at the top of the strut mounting plates. They shall be located on the existing chassis structure, utilizing the manufacturers original bolt holes and may not serve as reinforcement for that structure. Any non-adjustable shock absorber is allowed. The shock must be installed in the original mounting locations. Remote shocks are not permitted. Threaded shock bodies or adjusters may be used. Any spring up to a maximum spring rate of 500 pounds front and 800 pound rear may be used
Mini Cooper S (05-06)	77.0 x 85.8 1598	2467	1453 / 1461	16 x 7.	195/55 or 205/55	overall: 12.79, 7.79, 5.65, 4.62, 3.83, 3.13	N/A	(F) 277 Vented DIsc (R) 259 Solid Disc	2750	Convertible model not allowed. Factory optional limited slip differential allowed. JCW struts (F)31 31 6 768 410 (R)33 52 6 768 412, springs (F)31 33 6 768 415 (R)33 53 6 768 418 . May de-camber wheels by the use of slotted adjusters at the top of the strut mounting plates. They shall be located on the existing chassis structure, utilizing the manufacturers original bolt holes and may not serve as reinforcement for that structure. Any non-adjustable shock absorber is allowed. The shock must be installed in the original mounting locations. Remote shocks are not permitted. Threaded shock bodies or adjusters may be used. Any spring up to a maximum spring rate of 500 pounds front and 800 pound rear may be used
Mitsubishi Eclipse GT (00-05)	91.2 x 75.9 2972	2561	1509 / 1509	17 x 6.5	215/50	3.33, 2.10, 1.41, 1.03, 0.76	3.74	(F) 277 x 23 Vented Disc (R) 262 x 11 Solid Disc	3100	
Nissan Sentra Spec-V (07-08)	89.0 x 100.0 2488	2535	1466 / 1446	17 x 7 Alum	225/45	3.15, 1.94, 1.39, 1.06, 0.81, 0.63	4.13	(F) 305 Vented Disc (R) 278 Solid Disc	**3100**	Factory Brembo brakes allowed. OEM optional limited slip differential permitted..
Nissan Sentra SER (02-03)	89.0 x 100.0 2488	2535	1476 / 1455	16 x 7	195/55	3.15, 1.84, 1.26, 0.95, 0.77	4.133	(F) 280 x 22 Vented Disc (R) 258 x 9 Solid Disc	**2725**	Any non-adjustable shock absorber is allowed. The shock must be installed in the original mounting locations. Remote shocks are not permitted. Threaded shock bodies or adjusters may be used. Any spring up to a maximum spring rate of 500 pounds front and 800 pound rear may be used. Cold Air Intake system allowed. OEM optional limited slip differential permitted. 32mm OEM style and configuration rear sway bar allowed. Catalytic Converters may be removed.

CLASS (T4)	Bore x Stroke(mm)/ Displ. (cc)	Wheel-base (mm)	Track F & R (mm)	Wheel Size(in.)/ Mat'l.	Tire Size (stock)	Gear Ratios	Final Drive	Brakes (mm)	Weight (lbs)	Notes:
Nissan Sentra SER Spec-V (02-06)	89.0 x 100.0 2488	2535	1466 / 1446	17 x 7 Alum	215/45	3.15, 1.94, 1.39, 1.06, 0.81, 0.63	4.13	(F) 280 x 22 Vented Disc (R) 232 x 7 Solid Disc	**2950**	Any non-adjustable shock absorber is allowed. The shock must be installed in the original mounting locations. Remote shocks are not permitted. Threaded shock bodies or adjusters may be used. Any spring up to a maximum spring rate of 500 pounds front and 800 pound rear may be used. Cold Air Intake system allowed. . OEM optional limited slip differential permitted. 32mm OEM style and configuration rear sway bar allowed. Catalytic Converters may be removed.
Pontiac Firebird V-6 (96-02)	96.5 x 86.36 3790	2568	1542 / 1539	16 x 8	245/50	3.75, 2.19, 1.41, 1.00, 0.72	3.42	(F) 302 x 23 Disc (R) 305 x 25 Disc	3300	Performance option permitted, consisting of limited slip differential, uplevel steering rack, dual exhaust. GM PS cooler #10417037 allowed. Z-28 front sway bar (30mm) and rear sway bar (19mm) allowed. GM 1LE front (#26032907 32mm) and rear (#10021221 21 mm) sway bar allowed.
Pontiac Solsitce (06-09)	88.0 x 98.0 2384	2415	1543 / 1561	18 x 8 Alum	245/45	3.75, 2.26, 1.37, 1.00, 0.73 or 3.75, 2.26, 1.51, 1.00, 0.73	3.91	(F) 296 Vented Disc (R) 278 Solid Disc	2900	Detachable hardtop GM part # PCS-0664 shall be installed (latches shall be replaced w/ positive fasteners), convertible top shall be removed. Limited slip differential (G80), factory ABS (JL), and suspension option (ZOK) allowed. Cold Air intake permitte**d.**
Scion tC (03-07)	88.5 x 96.0 2326	2700	1506 / 1506	17 x 7 Alum	215/45	3.54, 2.05, 1.33, 0.97, 0.78	4.24	(F) 275 Vented Disc (R) 269 Solid Disc	2700	Any non-adjustable shock absorber is allowed. The shock must be installed in the original mounting locations. Remote shocks are not permitted. Threaded shock bodies or adjusters may be used. Any spring up to a maximum spring rate of 500 pounds front and 800 pound rear may be used. Cold Air Intake system allowed. OEM optional limited slip differential permitted. 32mm OEM style and configuration rear sway bar allowed. Catalytic Converters may be removed.
Scion FR-S (2013+)	86 x 86.0 1998	2570	1519 / 1539	17 x 7	225/45	3.626, 2.188, 1.541, 1.213, 1, .767	4.10	(F) 295 Vented Disc (R) 290 Solid Disc	3175	
Subaru BRZ (2013+)	86 x 86.0 1998	2570	1519 / 1539	17 x 7	225/45	3.626, 2.188, 1.541, 1.213, 1, .767	4.10	(F) 295 Vented Disc (R) 290 Solid Disc	3175	
Subaru Impreza (non-turbo) (04-06)	99.5 x 79.0 2457	2524.8	1485.9 1480.9	16 x 7 (F&R)	205/55 (F&R)	3.45, 2.06, 1.45, 1.09, 0.78	4.11	(F) 274.3 Vented Disc (R) 261.6 Solid Disc	2935	Any non-adjustable shock absorber is allowed. The shock must be installed in the original mounting locations. Remote shocks are not permitted. Threaded shock bodies or adjusters may be used. Any spring up to a maximum spring rate of 500 pounds front and 800 pound rear may be used. Cold Air Intake system allowed. OEM optional limited slip differential permitted. 32mm OEM style and configuration rear sway bar allowed. Catalytic Converters may be removed.
Subaru Impreza (2008-11)	99.5 x 79.0 2457	2620	1495/ 1495	16 x 7	205/55	3.45, 2.06, 1.45, 1.09, 0.78	3.90	(F) 255 x24 Vented (R) 280 x10 Solid	2950	Any non-adjustable shock absorber is allowed. The shock must be installed in the original mounting locations. Remote shocks are not permitted. Threaded shock bodies or adjusters may be used. Any spring up to a maximum spring rate of 500 pounds front and 800 pound rear may be used. Cold Air Intake system allowed. OEM optional limited slip differential permitted. 32mm OEM style and configuration rear sway bar allowed. Catalytic Converters may be removed.
Toyota Celica GTS (00-05)	*82.0 x 85.0 1796*	*2598*	*1488/ 1478*	*16 x 7*	*205/50*	*3.17, 2.05, 1.48, 1.17, 0.92, 0.73*	*4.53*	*(F) 280 Vented (R) 262 Solid*	**2725**	*TRD Sway Bars Part #PTR06-20002-01 permitted. TRD Limited Slip Part #41301-ST804. ABS option allowed* *Canton Accusump #24-026, install sandwitch #24-700, valve #24-260, and related hoses and brackets allowed.* Any non-adjustable shock absorber is allowed. The shock must be installed in the original mounting locations. Remote shocks are not permitted. *Threaded* shock bodies or adjusters may be used Any spring up to a maximum spring rate of 800 pounds may be used. 32mm OEM style and configuration rear sway bar allowed. Catalytic Converters may be removed.
Toyota Corolla XRS (05-06)	*82.0 x 85.0 1796*	*2598*	*1488/ 1478*	*16 x 7*	*205/50*	*3.17, 2.05, 1.48, 1.17, 0.92, 0.73*	*4.53*	*(F) 280 Vented (R) 262 Solid*	**2725**	*Canton Accusump #24-026, install sandwich #24-700, valve #24-260, and related hoses and brackets allowed.* Any non-adjustable shock absorber is allowed. The shock must be installed in the original mounting locations. Remote shocks are not permitted. *Threaded* shock bodies or adjusters may be used Any spring up to a maximum spring rate of 800 pounds may be used. OEM optional limited slip differential permitted. 32mm OEM style and configuration rear sway bar allowed. Catalytic Converters may be removed.
Toyota MR-2 Spyder 16V DOHC (01-05)	2001: 79.0 x 91.5 1794 02-03: 81.0 x 77.0 1587	2450	1475 / 1460	01-02: (F) 15 x 6 (R) 15x6.5 03-05: (F) 15 x 6 (R) 16 x 7	(F) 185/55 01-02(R) 205/50 03-05(R) 215/45	3.17, 1.90, 1.39, 1.03, 0.82	3.25		**2370**	Detachable hardtop shall be installed (latches shall be replaced w/ positive fasteners), convertible top shall be removed.

CLASS (T4)	Bore x Stroke(mm)/ Displ. (cc)	Wheel-base (mm)	Track F & R (mm)	Wheel Size(in.)/ Mat'l.	Tire Size (stock)	Gear Ratios	Final Drive	Brakes (mm)	Weight (lbs)	Notes:
Volkswagen Rabbit 2.5 (06-07)	82.55 x 92.71 2481	2578.1	1540 / 1519	17 x 7	195/65	3.78, 2.12, 1.36, 1.03, 0.77	3.65	(F) 228 Vented Disc (R) 260 Solid Disc	**2775**	Any non-adjustable shock absorber is allowed. The shock must be installed in the original mounting locations. Remote shocks are not permitted. *Threaded* shock bodies or adjusters may be used Any spring up to a maximum spring rate of 800 pounds may be used. Cold Air Intake system allowed. OEM optional limited slip differential permitted. 32mm OEM style and configuration rear sway bar allowed. Catalytic Converters may be removed.
Volkswagen Rabbit 2.5 (08-09)	82.55 x 92.71 2481	2578.1	1540 / 1519	17 x 7	195/65	3.78, 2.12, 1.36, 1.03, 0.77	3.65	(F) 228 Vented Disc (R) 260 Solid Disc	**2950**	Any non-adjustable shock absorber is allowed. The shock must be installed in the original mounting locations. Remote shocks are not permitted. *Threaded* shock bodies or adjusters may be used Any spring up to a maximum spring rate of 800 pounds may be used. Cold Air Intake system allowed. OEM optional limited slip differential permitted. 32mm OEM style and configuration rear sway bar allowed. Catalytic Converters may be removed.

Appendix D: Majors

The US Majors Tour is a clustering of select National events designed to offer the opportunity to race in a touring series against the best amateur drivers in the SCCA. The Majors will be run in four geographic conferences. Each Conference will have its own champion.

The National racing calendar has grown in number of events while participation has declined. Very little separates a National event from a Regional event today. Pro and semi-pro series, and competing organizations' events, have also attracted our National drivers. To remain a motorsports leader, our National racing program needs to evolve.

On October 10th 2012, the following notes were presented to the Board of Directors by its Planning Committee. This is an outline for the US Majors Tour program in 2013 and for the direction of National Club Racing in 2014.

2013 Series Administration

1. Registration – MotorsportsReg (MSR) preferred provider
2. Stewards
    a. Series Chief per Conference - appointed by the National Office in conjunction with the Chairman of the Executive Stewards and with input from the Executive Stewards
    b. Series Chief Steward will work with the Division's Executive Steward and the Region's designated representative in determining the remainder of the event stewards. Local Stewards for each track provide local track/region operating experience
    c. Series Chief Steward along with the Region's designated representative can make decisions – (change Supps, etc.)
    d. Series Chief, Local Stewards and Region's representative work together to make decisions impacting the conduct of the event
3. National will provide an on-site Series Administrator to oversee the operational efforts of National
    a. Serves as the primary point of contact between the Region and National related to the Tour obligations
4. National will provide a dedicated PR person to record the event activities and post updates on the Tour website
5. National promotes the Event as part of the US Majors Tour, including:
    a. Event specific page on the SCCAMajors.com web site
    b. Pre-event, at-event and post-event coverage on SCCAMajors.com
    c. National and in-market press releases related to the event
    d. Targeted personal communication with eligible drivers
    e. All event trophies, commemorative towels & victory flags
    f. Champagne for the Victory Circle festivities
    g. Portable public address system for Victory Circle festivities

2013 Series Structure

1. Four Conferences with the goal of 6 weekends per conference = 24 quality race events
    a. Includes 10 Super Tours
    b. 14 other events with a maximum of 4 Invitational's
    c. Test these events for true Invitational format= 5 race groups w/ 10 classes)
2. Conferences are open to all drivers; no restrictions
    a. Drivers can enter as many Conferences as they wish
    b. Only races in a given Conference will count for that Conference Championship
3. Events are Doubles
    a. Single event formats to be approved on case-by-case basis
    NOTE: 24 Doubles means that there will actually be 48 individual races
4. Driver awards ceremony to follow the Phoenix model of impound all with no down time in schedule
5. Majors Schedule Format
    a. 2 and 3 day schedules available
    b. Single and double formats available
    c. Various race groupings (5 – 8) available
    d. 7 race groups typical (5 groups with 2 classes each; 1 group open-wheel; 1 group closed-wheel)
6. Runoffs Qualification: a driver can earn an invitation by competing in USMT events.
7. Points
    a. Positions 1 –20 pays points – uses points model to drive people to Majors events by paying more points for position and deeper in field
    b. "Plus 10 Model" Standard national points 12, 9, 8 etc Plus 10.

Position	Standard Nat'l Points	Majors +10
1	12	22
2	9	19
3	7	17
4	6	16
5	5	15
6	4	14
7	3	13
8	2	12
9	1	11
10	0	10
11	0	9
12	0	8
13	0	7
14	0	6
15	0	5
16	0	4
17	0	3
18	0	2
19	0	1
20	0	1

2014

Following the 2013 season, "National" racing will be phased out, with the U.S. Majors Tour serving as the top level of a two-tier SCCA Club Racing program in 2014. The Majors program focused on clustering the best and toughest competition and Regionals focused on local racing programs

The changes over the next year will take the US Majors Tour and provide a definitive difference in event types through a series managed by the SCCA National Headquarters. For non-Majors events, this change will remove the limitations that holding a National event have historically placed on our Regions, providing the flexibility needed to customize their Regional Racing programs

Bullet points for 2014

1. New two-tier SCCA Club Racing program in 2014
    a. The Majors program focused on clustering the best and toughest competition
    b. Regionals focused on local racing
2. Simplify event types as learned through 2013 season
3. Open to Development
4. A path to the National Championship Runoffs will exist through both the Majors and for those that want to race just within their division.

Details of the 2014 path are still being determined, although the Board has committed for paths to exist for Runoffs-eligible classes through both the U.S. Majors Tour and Regional Racing.

CLUB RACING BOARD

SCCA Club Racing Board Minutes | October 2, 2012

The Club Racing Board met by teleconference on October 2, 2012. Participating were Jim Wheeler, Chairman; Chris Albin, Tony Ave, Fred Clark, Jim Drago, Peter Keane, Mirl Swan, and Pam Richardson, secretary. Also participating were: Todd Butler and Richard Patullo, BoD liaisons; Terry Ozment, Vice President of Club Racing; Butch Kummer, Director of Club Racing; John Bauer, Technical Manager, Club Racing; Ryan Miles, Technical Coordinator, Club Racing; and Bob Dowie. The following decisions were made:

SUGGESTED RULES FOR 2013

The following subjects will be referred to the Board of Directors for approval. Address all comments, both for and against, to the Club Racing Board. It is the BoD's policy to withhold voting on a rules change until there has been input from the membership on the presented rules. Member input is suggested and encouraged. Please send your comments via the form at www.clubracingboard.com.

GCR

1. #8972 (Allen Davis) FIA Homologated Racing Seats
Thank you for your letter. Change GCR 9.3.41:

9.3.41. SEATS

The driver's seat shall be a one-piece bucket-type seat and shall be securely mounted. The back of the seat shall be firmly attached to the main roll hoop, or its cross bracing, so as to provide aft and lateral support. Seats *that have been* homologated to and mounted in accordance with FIA standard 8855-1999, or *seats that have been certified to* FIA.Standard.8862-2009 or higher need not have the seat back attached to the roll structure. Seats with a back not attached to the main roll hoop or its cross bracing may be mounted on runners only if they were part of the FIA homologated seats assembly specified in an FIA homologated race car. The homologation labels must be visible. Seat supports shall be of the type listed on FIA technical list No.12 or No. 40 (lateral, bottom, etc). Passenger seat back–if a folding seat, it shall be securely bolted or strapped in place.

2. #9304 (Greg Amy) Change to Turbo Inlet Restrictor Definition
In Appendix F. Technical Glossary, change the definition of Turbo Inlet Restrictor (TIR):
Turbo Inlet Restrictor - A system to limit engine performance that meets these criteria. The inlet restrictor shall have a single, circular opening through which all inlet air passes. The **maximum ID of the restrictor** is listed on the vehicle's spec line. The restrictor's maximum ID must be maintained for at least 3 mm. **This 3 mm restrictor segment shall** be placed within 50 mm of the rotating section (impeller assembly) of the pressurizing unit. *On engines where the approved turbo prohibits meeting this distance, different locations may be approved by the CRB on a case by case basis. If an alternative location is approved, the entire restrictor assembly shall have a maximum length of 50 mm.* There shall be no other provisions for airflow to the turbocharger other than through this single orifice.

Formula/Sports Racer

FC

1. #8803 (Jay Ivey) Reduce the Weight of the FF1600 and 2.0 Ford Rods.
Thank you for your request. Change the below items in the GCR and in the file located at http://www.scca.com/clubracing/content.cfm?cid=44472 (Proposed FF/FC Reorganization):
9.1.1.B.3.f.3, 4, and 5:

> 3. AE Hepolite piston P/N 21426, casting P/N 21426 (AE Hepolite) with rings, pin, connecting rod (with bolts), but without bearings: Minimum permitted weight = ~~1240~~ *1215* grams.
>
> 4. CP piston P/N IV 2.0 LTR with rings, pin, connecting rod (with bolts), but without bearings: Minimum permitted weight = ~~1240~~ *1215* grams. Part number and Ivey logo stamped on wrist pin bosses.
>
> 5. JE piston P/N M-6102-B200 with rings, pin, connecting rod (with bolts), but without bearings: Minimum permitted weight = ~~1240~~ *1215* grams.

9.1.1.D.1.j: **j. Connecting Rods**

Any ferrous connecting rod may be used provided it meets a minimum weight of ~~630~~ *620* grams and has a center to center length of 4.925 +/- 0.020 inches. (Note: Weights include cap, bolts, and small end bush, but not big end bearing shells).

9.1.9.B.5.f.3, 4, and 5:

> 3. AE Hepolite piston P/N 21426, casting P/N 21426 (AE Hepolite) with rings, pin, connecting rod (with bolts), but without bearings: Minimum permitted weight = ~~1240~~ *1215* grams.

4. CP Pistons P/N IV 2.0 LTR with rings, pin, connecting rod (with bolts), but without bearings: Minimum permitted weight = ~~1240~~ *1215* grams. Part number and Ivey logo stamped on wrist pins bosses.

5. J&E piston P/N M-6102-B200 with rings, pin, connecting rod (with bolts), but without bearings: Minimum permitted weight = ~~1240~~ *1215* grams.

Grand Touring
GT
1. #9327 (GT Committee) Engine Location Definition
In 9.1.2.F.4.e13 add: 13. Engine and transmission mounts may be of alternate shape and/or material. Cars with engines mounted longitudinal to the chassis MAY relocate the engine in a longitudinal, not lateral, direction within the following restrictions: (Note: A tolerance of up to a 1.0 inch setback is allowed if the engine is relocated.) *OEM body-engine combinations run in their stock locations are allowed. Stock engine location is defined such that the forward-most spark plug is within 1.0 inch of the stock location compared to the front axle centerline.*

GTL
1. #8971 (Jim Zirkel) Allow Cross Flow Heads
Thank you for your letter. Insert spec line below into GTL CARS - BLMI, Engines - BMC thru Rover Group, between lines 6 and 7.

Engine Family	Engine Type	Bore x Stroke (mm)	Disp. (cc)	Head Type	Valves / Cyl.	Fuel Induction	Weight (lbs)	Notes
	OHV	2.78 x 3.20 (70.6 x 81.33) alt. bore: 73.5 max. or 74.0 max.	1275 1380 1399	*Alum. Crossflow*	2	*Unrestricted* *24.5mm SIR* *24.5mm SIR* *Unrestricted* *24.5mm SIR* *24.5mmSIR*	*1275@1650* *1380@1850* *1399@1889* *Sprite/Midget* *1275@1810* *1380@2010* *1399@2050*	*See all notes above.* *Pierce 7 port alum. crossflow cylinder head part #99003.849 is allowed.* *Mini Spares 8 port alum. Crossflow cylinder head part #C-AHT346 is allowed.*

Improved Touring
ITA
1. #9410 (SCCA Staff) Re-Classify the Honda CRX 1.5L (standard) (88-91) to ITB
Reclassify the ITA Honda CRX 1.5L (standard) (88-91) to ITB as classified in ITA with the following exceptions:

Weight: ~~2000~~ *2110*

Gear Ratios: ~~3.25, 1.65, 1.03, 0.82 or~~ 3.25, 1.89, 1.26, 0.94, 0.77

Super Touring
STU
1. #9413 (ST Committee) Change Lotus STU Spec Line
Correct letter#8975 (September 2012 Fastrack): In Table A. Alternate Vehicle Allowances, STU, for, Lotus SC1/Lotus Exige SC, change Notes: ~~Open pulley and injectors; OEM camshaft lift at 2400 lbs. Stock SC pulley, and injectors permitted at 2200 lbs.~~ *Minimum ~~Supercharger~~ 2.7" pulley, ~~of 2.7" diameter is allowed~~, open injectors, OEM camshaft at 2400 lbs. Stock SC pulley and injectors permitted at 2200lbs.*

ST
1. #9412 (ST Committee) Change Weight/CC Chart in STU, STL
Change Weights and Engine Allowances in GCR/STCS (STL) 9.1.4.3.I:
Weights and Engine Allowances

Minimum weights for cars with normally aspirated piston engines will be determined by 1.35 lbs/cc displacement for the installed engine (see following table). Displacement is the factory displacement for the installed engine. *For the purpose of weight assignment, engine displacement will be rounded to the nearest 50cc (e.g., 2176cc = 2200cc and 2175cc = 2150cc).*

Factory Engine Displacement (cc's)	Minimum Weight in Lbs
1300	1755
1350	*1823*
1400	1890
1450	*1958*
1500	2025
1550	*2093*

1600	2160
1650	*2228*
1700	2295
1750	*2363*
1800	2430
1850	*2498*
1900	2565
1950	*2633*
2000	2700

Change Weights and Engine Allowances in GCR/STCS (STU) 9.1.4.2.I:

Weights and Engine Allowances

Minimum weights for cars with normally aspirated piston engines will be determined by 1.1 lbs/cc displacement for the installed engine (see following table). Displacement is the factory displacement for the installed engine. ***For the purpose of weight assignment, engine displacement will be rounded to the nearest 50cc (e.g., 2176cc = 2200cc and 2175cc = 2150cc).***

Factory Engine Displacement (cc's)	Minimum Weight Lbs
1600	1760
1650	*1815*
1700	1870
1750	*1925*
1800	1980
1850	*2035*
1900	2090
1950	*2145*
2000	2200
2250	*2475*
2300	2530
2350	*2585*
2400	2640
2450	*2695*
2500	2750
2550	*2805*
2600	2860
2650	*2915*
2700	2970
2750	*3025*
2800	3080
2850	*3135*
2900	3190
2950	*3245*
3000	3300
3050	*3355*
3100	3410
3150	*3465*
3200	3520

STL
1. #7717 (Corey Roun) Front Splitter
Thank you for your letter. Change the following in the GCR/STCS:

Delete 9.1.4.1.B.1 (STO splitter) entirely.

Delete 9.1.4.2.B.1 (STU splitter) entirely

Delete 9.1.4.3.B.1 (STL splitter) entirely.

Replace 9.1.4.D (STCS general section, Aerodynamic Devices) with the following:

D. Aerodynamic Devices

1. Front Air dam

a. A front spoiler/air dam may be added. It shall not protrude beyond the overall outline of the body when viewed from above perpendicular to the ground, or aft of the forward most part of the front fender opening.

b. The spoiler/air dam shall be mounted to the body, and may extend no higher than four (4) inches above the horizontal centerline of the front wheel hubs. The air dam shall have no support or reinforcement extending aft of the forward most part of the front fender wheel opening.

c. The minimum ride height of the air dam is 3.0 inches.

d. Openings are permitted for the purposes of ducting air to the brakes, cooler(s), and radiator(s).

2. Undertray

a. An undertray may be added. The undertray may close out the underbody from the leading edge of the approved bodywork (including air dam) back to the centerline of the front axle.

b. The minimum ride height of the undertray is 3.0 inches.

3. Splitter

a. Definition: A horizontal, single-plane aerodynamic device attached to the lower front of the vehicle, protruding forward. It is intended to divert air and produce downforce through vertical pressure differential. A splitter shall have no vertical deviations.

b. A front splitter may be added. A maximum of 4 rods or cables may be used to support the front and/or sides of the splitter. No other material(s) may be used external to the body to support the splitter.

c. The front splitter must not extend more than 2.0 inches past the original or approved bodywork as viewed from above for the entire profile of the splitter.

d. No part of the splitter shall extend laterally any further than the widest point of the outside sidewall of the front tires with the wheels pointed straight ahead.

e. The splitter may have vertical deviations, fences, etc., only if they are part of the production bodywork for street use.

f. The minimum ride height of the front splitter is 3.0 inches.

Re-number “9.1.4.D.2. Rear Wing” to “9.1.4.D.4. Rear Wing” and retain verbiage as is.

2. #9517 (Club Racing Board) Approve STL as National Class for 2013
The CRB requests approval for STL to be a National Class for 2013.

American Sedan
None.

Spec Miata
None.

Touring/Showroom Stock
B-Spec
1. #9525 (Club Racing Board) Approve B-Spec as National Class for 2013
The CRB requests approval for B-Spec to be a National Class for 2013.

WHAT DO YOU THINK?
None.

MEMBER ADVISORIES
None.

NOT APPROVED BY THE CRB
GCR
1. #9160 (Viet-Tam Luu) Allow E85 Fuel in Suitable Cars
Thank you for your request. This fuel is not compatible with SCCA fuel testing supplies and therefore could not be determined to be compliant or non-compliant. The CRB has no plans to add this fuel for Club Racing competition.

Formula/Sports Racing
None.

Grand Touring
None.

Improved Touring
ITA
1. #8249 (Bowie Gray) Add Weight to BMW 325e

Thank you for your request. The car's weight is correct as classified. The CRB will continue to monitor performance.

2. #9195 (Tim DeRonne) Re-Class ITA Escort to ITB
Thank you for your letter. The CRB believes the car is correctly classified.

3. #9229 (Kurt Thiel) Weight Reduction, 94-97 miata
Thank you for your letter. The car' weight is correct as classified.

IT
1. #9234 (Steve Elicati) Re-classify the 90-93 Mazda Protege and 91-95 Escort GT to ITB
Thank you for your letter. The CRB believes the car is correctly classified.

American Sedan
1. #8843 (John Payne) Reduce Weight for the Use of 350ci Engine in Class by 200 lbs
Thank you for your request. The car's weight is correct as classified.

Spec Miata
None.

Touring/Showroom Stock
None.

PREVIOUSLY ADDRESSED
Super Touring
ST
1. #9176 (Matt Blehm) Error in Prelim Minutes Letter #9046
Thank you for your letter. Please see the final version of letter #9046 in the October 2012 Fastrack.

NO ACTION REQUIRED
GCR
None.

Formula/Sports Racing
None.

Grand Touring
GT
1. #9095 (Rick Henschel) Engine Placement in GT2-GTL
Thank you for your letter. OEM body-engine configurations run in their stock locations are allowed. Please see letter #9327.

GT3
1. #9032 (Ken Nelson) Rear Wing Length Clarification
Thank you for your question. If you mount the Gurney tab as you describe, your wing will not be compliant. 10.75" is a maximum inclusive of the Gurney tab.

GTL
1. #9025 (Gary Johnson) Misc. Adjustments
Thank you for your request. All items in this letter have been previously addressed in Fastrack as well as personal exchanges by email and/or with the SCCA Technical Department. Item 1, please see April 2010 Fastrack, letter #1109. Item 2, please see October 2012 Fastrack, letter #8971. Item 3, please see April 2012 Fastrack, letter #7231. The CRB has no plans to change these decisions.

2. #9154 (Kyle Disque) Support GTL Proposed Changes
Thank you for your letter. Please letter #8749 in the September 2012 Fastrack.

Improved Touring
ITB
1. #7001 (Steven Ulbrik) Please Re-Classify 4AGE Powered Cars with New Information
Thank you for your letter. Please see letter #6953 (Technical Bulletin).

2. #7306 (Art Jaso) Reduce the Weight of the MR2 - Dyno Sheet
Thank you for your letter. Please see letter #6953 (Technical Bulletin).

3. #7323 (Stephen Beckley) Reduce the Weight of the 85-89 MR2
Thank you for your letter. Please see letter #6953 (Technical Bulletin).

4. #7348 (Franklin Dam) Reduction of ITB MR2 by 95 lbs
Thank you for your letter. Please see letter #6953 (Technical Bulletin).

5. #7357 (Carlos Schooler) Reduce MR2 Weight by 95 lbs
Thank you for your letter. Please see letter #6953 (Technical Bulletin).

6. #7655 (Daniel Keane) Reduce the Weight of the 86-89 Accord
Thank you for your letter. Please see letter #7634 (Technical Bulletin).

7. #8339 (IT Committee) MR2 Gear Ratios
Thank you for your request. Please see letter #6953 (Technical Bulletin).

8. #9054 (Tony Swan) Reduce Minimum Weight of 1988 Honda Accord iLX
Thank you for your input. Please see letter #7634 (Technical Bulletin).

IT
1. #7324 (William Griffith) MR2 Weight
Thank you for your letter. Please see letter #6953 (Technical Bulletin).

2. #9062 (Demetrius Mossaidis) IT Rules Interpretation Request - Air Dam/Spoiler Topics
Thank you for your letter. The rule is correct as written.

Production
None.

Super Touring
STU
1. #9382 (Marc Hoover) PARITY
Thank you for your input. Your suggestion is being considered by the CRB for 2013.

2. #9383 (Marc Hoover) PARITY
Thank you for your feedback. The CRB will take your suggestions into consideration.

3. #9395 (Patrick Lipsinic) Higher Compression Impreza 2.5 RS
Thank you for your request. If the VTS sheet from World Challenge cannot be found, you should prepare your car to current STU rules.

STL
1. #9191 (Earl Richards) Allow All IT Cars to Compete in STL
Thank you for your feedback. The CRB recognizes that no ITS/A/B/C car should be faster than a fully-prepared STL vehicle and that being inclusive with IT cars for STL is good for everyone. However, ST class philosophy is engine-centric and allowing any cars in from IT with larger engines than specified for any given ST class would be counter to the ST class philosophy. The CRB encourages you to participate in STU which most likely will be paired in a race group with STL, and hence would give you the opportunity to race with ITA-based STL cars, even though your car would be in STU.

2. #9384 (Marc Hoover) Parity RX8 v Miata
Thank you for your feedback. The CRB will take your suggestions into consideration.

American Sedan
1. #9027 (Jerry Hooten) Disable ABS by Removing System Fuse
Thank you for your request. The proposed 2013 American Sedan ruleset does not specify the method of disabling the ABS, only that it is the responsibility of the competitor to provide proof of the ABS system disabling.

2. #9524 (Club Racing Board) October 2012 Changes to Proposed AS Rules and Spec Lines
Make the following changes at: http://scca.cdn.racersites.com/prod/assets/Proposed2013ASSpecLines

Change Specification line for Chevrolet/Pontiac Camaro and Firebird (93-97) Restricted Prep.

Chevrolet/ Pontiac Camaro & Firebird (93-97) Restricted Prep.	101.1	2.97, 2.07, 1.43, 1.00, 0.80, 0.62 *or 3.36, 2.07, 1.35, 1.00, .80, .62*	12.2 x 1.27 Disc	*3200*	A .060 in. thick SIR may be added to maintain performance parity within the class. Max. Wheel Size: ~~16 x 8.~~*17 x9. Stock brakes must be retained when using authorized wheels larger than 16 x 8. Installation of ASedan specification brakes requires the use of 16 x 8 wheels. GM Performance Parts camshaft Kit P/N-12480002 is permitted*.

Change Specification line for Ford Mustang Coupe GT (05-09) Restricted Prep.

Ford Mustang Coupe GT *4.6L* (05-~~09~~*10*) Restricted Prep.	107.1	3.38, 2.00, 1.32, 1.00, 0.68	(F) ~~335~~ *316/355* Vented Disc (R) 300 Vented Disc	*3250*	A .060 in. thick SIR may be added to maintain performance parity within the class. Max. Wheel Size: ~~17 x 9~~*18 X 9.5*. Stock brakes *or alternate Ford 14" Brembo Brake (Ford Racing Kit #M-2300-S)* must be retained when using authorized wheels larger than 16 x 8. Installation of ASedan specification brakes requires the use of 16 x 8 wheels. *Cold Air Intake, Ford Racing Part M-9603-M463 is permitted. Replacement exhaust manifolds, or "headers," may be used. Cylinder head mounting flange(s) shall be no thicker than 0.375 inch, and tubing diameter shall be no greater than 1.625 inch O.D., measured at any tube location one (1) inch from the flange to the collector.*

Classify Chevrolet Camaro SS (V8) (10-13) Restricted Prep. And Ford Mustang Coupe GT 5.0L (11-13) Restricted Prep.

Chevrolet Camaro SS (V8) (10-13) Restricted Prep.	*112.3*	*3.01, 2.07, 1.43, 1.0, .84, .57*	***(F) 355 mm X 32.1mm Vented Disc (R) 300 mm X 19.2Vented Disc***	*275 Tire: 3700* *295 Tire: 3750*	*Max wheel size 20 X 10. Stock brakes must be retained when using authorized wheels larger than 16 X 8. Installation of ASedan specification brakes requires the use of 16 X 8 wheels. A single inlet restrictor 50 mm (max) X .60" +/- .005" is required, and must be placed in the front of the factory throttle body manifold opening. The plate must seal the opening so that all air entering passes through the restrictor.*
Ford Mustang Coupe GT 5.0L (11-13) Restricted Prep.	*107.1*	***3.66, 2.43, 1.69, 1.32, 1.00, 0.65***	***(F) 335/355 Vented Disc (R) 300 Vented Disc***	*275 Tire: 3600* *295 Tire: 3650*	***Max. Wheel Size: 18 x 10. Stock brakes or alternate Ford 14" Brembo Brake (Ford Racing Kit #M-2300-S) must be retained when using authorized wheels larger than 16 x 8. Installation of ASedan specification brakes requires the use of 16 x 8 wheels. 50 mm flat plate restrictor require***d.

Make the following changes at: http://scca.cdn.racersites.com/prod/assets/Proposed2013ASRules.pdf

9.1.6.D.3.b: Restricted preparation cars only:

4. ~~OEM driveshafts must be utilized~~. *OEM driveshafts may be replaced with any one piece driveshaft of steel or aluminum construction.*
5. ~~OEM or factory equivalent u-joints must be utilized.~~
6. ~~Balancing of the driveshaft is permitted. Removal of material solely for the purposed of balancing is permitted.~~

~~7~~*5*. Driveshaft loops are permitted/recommended.

9.1.6.D.7.d.5:

5. *Steel, aluminum, or* fiberglass hoods ~~including cowl hoods up to 3"may be used~~ *may include a sealed protrusion above the hood's external profile not to exceed 3 inches in height.* Otherwise the external profile of the hood shall remain stock.

Spec Miata

None.

Touring/Showroom Stock

None.

RESUMES

None.

CLUB RACING TECHNICAL BULLETIN

DATE: October 20, 2012
NUMBER: TB 12-11
FROM: Club Racing Board
TO: Competitors, Stewards, and Scrutineers
SUBJECT: Errors and Omissions, Competition Adjustments, Clarifications, and Classifications
All changes are effective 11/1/2012 unless otherwise noted.

GCR
None.

Formula/Sports Racer
FF
1. #9035 (Lee Niffenegger) Update Part Numbers for Honda Fit FF Engine
In section 9.1.1.D.3.b.1, update the block part numbers for the Honda Fit engine package as follows:
"The only permitted cylinder block is Honda PN: 11000-RP3-810 *(2009-2010) / (11000-RTW-810 (2010-2012)*"
In section 9.1.1.D.3.f.1, update the cylinder head part numbers for the Honda Fit engine package as follows:
"The only permitted heads are Honda PN: 12200-RB0-G00 *(2009-2010) / 12200-RP3-A00 (2010-2012)* (US spec) and 12200-RB0-000 (Japan Spec)."

Grand Touring
GTL
1. #9325 (GT Committee) Committee E/O GTLite Mini Cooper and Sprite/Midget. weight
In GTL, BMC thru Rover Group engine, change the weight for the 1399cc engine as follows:
1399cc @ ~~1660~~ *1620*
Sprite/Midget: 1399cc @ ~~1820~~ *1780*

Improved Touring
ITR
1. #6573 (Dale LaGasse) propose 1986 mustang gt for ITR
Classify the 1986 Ford Mustang in ITR as follows:

ITR	Engine Type	Bore x Stroke(mm)/ Displ. (cc)	Valves IN & EX (mm)	Comp. Ratio	Wheel-base (inch)	Wheel Dia. (inch)	Gear Ratios	Brakes Std. (mm)	Weight (lbs)	Note
Ford Mustang GT(1986)	*8 cyl OHV*	*101.6 x 76.2 4942*	*(I) 45.3 (E) 36.9*	*9.2*	*101.3*	*17*	*2.95, 1.94, 1.34,1.00, .63*	*(F) 255 Disc (R) 229 Drum*	*2915*	

ITB
1. #6953 (Art Jaso) Reduce weight of 85-89 MR2 by 100 lbs
In ITB, Toyota MR2 1.6L (85-89), make the following changes:
weight: ~~2430~~ *2335*
Gear Ratios: 3.17, 1.90, 1.31, 0.97, 0.82 ~~& 3.23, 1.91, 1.26, 0.92, 0.73~~

2. #7634 (Christopher Childs) Reduce the weight of the 86-88 Accord
In ITB, Honda Accord Lxi 12V Coupe & HB (86-89), change the weight as follows:
~~2650~~ *2550*
In ITB, Honda Accord SE-i (1989), change the weight as follows:
~~2650~~ *2550*

3. #8340 (IT Committee) Honda cleanup
In ITB, Honda Civic DX (2&4 Door) (92-95), correct the wheelbase as follows:
~~2 & 4 door: 103.2 3 door: 101.3~~ *103.2*
In ITB, Honda Civic DX (3 Door) (92-95), correct the wheelbase as follows:
~~2 & 4 door: 103.2 3 door: 101.3~~ *101.3*

IT
1. #6379 (Ronald Earp) Classification of Two Cars into IT 4th gen Camaro

ITS	Engine Type	Bore x Stroke(mm)/ Displ. (cc)	Valves IN & EX (mm)	Comp. Ratio	Wheel-base (inch)	Wheel Dia. (inch)	Gear Ratios	Brakes Std. (mm)	Weight (lbs)	Notes:

Chevrolet Camaro 3.4L (93-95)	*6 cyl OHV*	*92 x 84 3350*	*(I) 43.7 (E) 36.3*	*9.0:1*	*101.1*	*16*	*3.75, 2.19, 1.41, 1.00, 0.74*	*(F) 272 Vented Disc (R) 241 Drum*	*2680*	

Production
None.

Super Touring
ST
1. #9303 (Greg Amy) APR Wings, STU/L
In section 9.1.4.2.B.2.f (STU), correct the APR wing specs as follows:
"APR performance ~~wing~~ GTC-200 *"SCCA Spec" wing,* part #AS-104801, variable cord length (8.75" inner *chord* ~~/6.75" Outer~~), is permitted."
In section 9.1.4.3.B.2.f (STL), corect the APR wing specs as follows:
"~~APR Performance GTC-200 "SCCA Spec" wing, part #AS-104801, variable cord length (8.75" Inner/6.75" Outer), 48" span, 9.5" long end plates, is permitted. Wing must comply with class maximum assembly width regulations.~~"
APR performance GTC-200 "SCCA Spec" wing, part #AS-104801, variable cord length (8.75" inner chord), is permitted.

2. #9330 (Eric Heinrich) Wing endplate dimension definition
In section 9.1.4.1.B.2.b (STO), clarify as follows:
"Wing end plates must not exceed 144.0 square inches *each*."
In section 9.1.4.2.B.2.e (STU), clarify as follows:
"Wing end plates must not exceed 64.0 square inches *each*."
In section 9.1.4.3.B.2.e (STL), clarify as follows:
"Wing end plates must not exceed 64.0 square inches *each*."

3. #9411 (ST Committee) Change max tire size for STU, STL
Add section under STU 9.1.4.2.I Tires Max section width 245. Move I weights and allowances to new section J
Add section under STL 9.1.4.3.I Tires Max section width 225. Move I Weight requirements to new section J

STL
1. #8714 (Kirk Knestis) Add alternate VW ABF 2.0 16v engine to STL.
In STL, classify the Volkswagen ABF as follows:
Volkswagen ABF/1984/Chart

2. #9306 (Greg Amy) Renesis/Rotaries/RWD in STL
In section 9.1.4.3.G, clarify section 2 and 3 as follows:
2. Rotors - ~~The standard production rotors or~~ Any 1- or 2-piece ferrous rotors that do not exceed 290mm in diameter and 28mm in thickness are permitted.
3. Calipers - ~~The standard production calipers or~~ Any 4-piston or fewer calipers may be used.
In section 9.1.4.3.I.3, change the weight penalty as follows:
Rear wheel drive cars in STL must add ~~2.5~~ *3.5* percent of their standard STL weight.

American Sedan
None.

Spec Miata
1. #9429 (Club Racing Board) Clarification SM Taping of Radiator
In section 9.1.8.C.1.o.5, clarify the paragraph as follows:
"A radiator screen of 1/4 inch minimum mesh may be added in front of the radiator and contained within the bodywork. *Tape and/or other materials may not be applied to the mesh or in the radiator opening in the bodywork. Tape or other materials may only be added directly to the radiator.*"

Touring/Showroom Stock
None.

CLUB RACING COURT OF APPEALS

JUDGMENT OF THE COURT OF APPEALS
John Annis vs. SOM COA Ref. No 12-12-SE
September 13, 2012

FACTS IN BRIEF
On August 11, 2012, at the Central Florida Region Double SARRC Regional Race at Daytona International Speedway, John Annis (SRF #87) protested Mick Robinson (SRF #75) for violating 2012 GCR Section 6.11.1. (Rules of the Road). Mr. Annis alleged that Mr. Robinson did not allow racing room and that he initiated several instances of body contact during the course of the race. The Stewards of the Meeting (SOM) Richard Babcock, Doug Puckett, Norm Esau, Martyn Eastwood, Sandy Jung, Pax Lemmon, and William Merrill, Chair, interviewed both drivers, witnesses, watched video and reviewed various written statements. The SOM upheld Mr. Annis' protest finding that responsibility for the contact fell to both Mr. Annis and Mr. Robinson, and directed that penalty points be placed on the licenses of both Mr. Annis and Mr. Robinson.

Mr. Annis appealed the decision of the SOM.

DATES OF THE COURT
The SCCA Court of Appeals (COA) Tom Hoffman, Jack Marr and Michael West, Chairman, met on September 6 and 13, 2012 to review, hear and render a decision on the appeal.

DOCUMENTS AND OTHER EVIDENCE RECEIVED AND REVIEWED

1. Letter of Appeal from John Annis, received August 21 2012.
2. Official Observer's Report and related documents including in-car video from car #08 SRF (McKibben) received August 21, 2012.
3. Report of telephone conversation between Michael West and William Merrill on September 2012.

FINDINGS
After careful review of both the witness statements and in-car video, the COA finds that the contact was incidental with responsibility falling to both Mr. Annis and Mr. Robinson. No undue aggression by either party was observed. Mr. Annis offered no new evidence to the contrary.

The penalty of points only without imposing a specific penalty is not available to the SOM within the GCR. Therefore, the COA finds that the SOM erred in directing that only penalty points were to be placed on Mr. Annis' and Mr. Robinson's licenses

DECISION
The Court of Appeals overturns the decision of the SOM in its entirety based on procedural error. Any penalty points awarded to Mr. Annis or Mr. Robinson by this action are removed.

Mr. Annis' appeal is well founded and his appeal fee, less administrative costs retained by SCCA, will be returned.

CLUB RACING COURT OF APPEALS

JUDGEMENT OF THE COURT OF APPEALS
Michael Kehoe vs. SOM COA Ref. No. 12-13-CN
September 27, 2012

PRIOR PROCEEDINGS AND FACTS IN BRIEF
At the Kettle Double Regional on August 25, 2012 at Road America, Kevin Coulter, Assistant Chief Steward (ACS) submitted a Request For Action (RFA) to investigate contact among three cars on the first lap of Race 5 at Turn3. The cars were #13 AS driven by Brian LaCroix, #86 AS driven by Dick Read, and #17 GT-1 driven by Michael Kehoe. The Stewards of the Meeting (SOM) JoAnne Jensen and Nonda van Gulden, Chair, held a hearing, heard testimony, reviewed witness statements, and viewed a video of the incident provided by Road America. The SOM determined that both Mr. Read and Mr. Kehoe were in violation of 2012 GCR 6.11.1.A, B, C, and D (On Course Driver Conduct, specifically avoiding contact, racing room, and responsibility during a pass). Mr. Read was given a Reprimand, which assigned one automatic penalty point to his competition license. Mr. Kehoe was placed on Probation for six race weekends and that penalty assessed three points against his license. Mr. Kehoe is appealing the penalty and the delay in his receiving notification of the penalty.

DATES OF THE COURT
The National Court of Appeals (COA) Tom Hoffman, Jeffrey Niess, and Michael West, Chairman, met on September 23 at Road America, and September 27, 2012 by conference call, to hear, review and render a decision on the appeal.

DOCUMENTS AND OTHER EVIDENCE RECEIVED AND REVIEWED

1. Letter of appeal from Michael Kehoe received September 4, 2012.
2. Official Observer's Report and related documents received September 13, 2012.
3. Statement from Nonda van Gulden received September 13, 2012.
4. Video clip provided to Mr. Kehoe as reviewed by SOM received September 23, 2012.

FINDINGS

On the first lap of Race 5 at Turn 3, Mr. Kehoe drove his #17 GT-1 down the right side of the track in an attempt to overtake and pass several cars. Approaching the apex of the turn, his car contacted the right rear corner panel of car #86 causing it to spin. While #86 was spinning, #13 unavoidably struck the #86 car of Mr. Read.

The COA reviewed all evidence associated with the RFA, including the video clip, and concurs with the SOM on their conclusions that Mr. Read and Mr. Kehoe shared responsibility for the incident, with Mr. Kehoe bearing the majority of blame.

The COA acknowledges the delay in the notification process, but finds it to be timely due to Mr. Kehoe's request to leave the track prior to the SOM decision and to the personal availability of the parties involved.

DECISION

The Court of Appeals upholds the decision of the SOM in its entirety. Although Mr. Kehoe presented no new facts in his appeal, the COA acknowledges his question in regard to the notification process and deems his appeal to be well founded. Mr. Kehoe's appeal fee, less the administrative portion retained by the SCCA, will be returned.

CLUB RACING COURT OF APPEALS

JUDGMENT OF THE COURT OF APPEALS
Ramon Niebla vs. SOM COA Ref. No 12-14-SP
September 27, 2012

FACTS IN BRIEF

Following post-race impound after the Group 3 race at Buttonwillow on September 2, 2012, Stephen Ruiz, STL #15, protested Ramon Niebla, STL #81, for failing to enter STL under the Spec Miata rules: absence of restrictor plate, and failing to meet the minimum weight specifications for Spec Miata.

The Stewards of the Meeting (SOM) Jack Brabban, Maggie Jardine, and Marge Binks, Chair, heard testimony and reviewed witness statements from William Wells, Tech Steward responsible for Mazda automobiles, Mr. Ruiz, Mr. Niebla, and two other STL competitors that Mr. Ruiz protested. The SOM upheld Mr. Ruiz's protest, disqualified Mr. Niebla from the final results of the Group 3 race, and assessed four (4) penalty points against Mr. Niebla's competition license. Mr. Niebla appealed the decision of the SOM.

DATES OF THE COURT

The SCCA Court of Appeals (COA) Rick Mitchell, Jack Marr, and Michael West, Chairman, met on September 13, September 18, and September 27, 2012 to review, hear, and render a decision on the appeal.

DOCUMENTS AND OTHER EVIDENCE RECEIVED AND REVIEWED

1. Letter of Appeal from Ramon Niebla, received September 5, 2012.
2. Official Observer's Report and related documents, received September 11, 2012.
3. Email from Marge Binks, SOM Chair, received September 18, 2012.

FINDINGS

Following notification of the appeal, Marge Binks, SOM Chair, requested that the Court of Appeals return this action to the SOM for further review. The SOM reconvened and on September 18, 2012, issued a revised ruling rescinding Mr. Niebla's disqualification. Mr. Niebla's original finishing position was restored and the penalty points were removed from his competition license.

The SOM notified all parties, including Mr. Ruiz, of their revised ruling, and provided all with a new 10 day period for requesting continuance of the appeal or to submit new appeals. Mr. Niebla did not request continuance within the new appeal period.

DECISION

The SOM action rendered Mr. Niebla's appeal moot and he did not request further action by the COA. Mr. Niebla's petition is returned unheard and his entire appeal fee will be returned.

CLUB RACING COURT OF APPEALS

JUDGMENT OF THE COURT OF APPEALS
Clement Lee vs. SOM COA Ref. No 12-15-SP
September 27, 2012

FACTS IN BRIEF
Following post-race impound after the Group 3 race at Buttonwillow on September 2, 2012, Stephen Ruiz, STL #15, protested Clement Lee, STL #33, for failing to enter STL under the Spec Miata rules: absence of restrictor plate, and failing to meet the minimum weight specifications for Spec Miata.

The Stewards of the Meeting (SOM) Jack Brabban, Maggie Jardine, and Marge Binks, Chair, heard testimony and reviewed witness statements from William Wells, Tech Steward responsible for Mazda automobiles, Mr. Ruiz, Mr. Lee, and two other STL competitors that Mr. Ruiz protested. The SOM upheld Mr. Ruiz's protest and disqualified Mr. Lee from the final results of the Group 3 race, and assessed four (4) penalty points against Mr. Lee's competition license. Mr. Lee appealed the decision of the SOM.

DATES OF THE COURT
The SCCA Court of Appeals (COA) Rick Mitchell, Jack Marr, and Michael West, Chairman, met on September 13, September 18, and September 27, 2012 to review, hear and render a decision on the appeal.

DOCUMENTS AND OTHER EVIDENCE RECEIVED AND REVIEWED
1. Letter of Appeal from Clement Lee, received September 5, 2012.
2. Official Observer's Report and related documents, received September 11, 2012.
3. Email from Marge Binks, SOM Chair, received September 18, 2012.

FINDINGS
Following notification of the appeal, Marge Binks, SOM Chair, requested that the Court of Appeals return this action to the SOM for further review. The SOM reconvened and on September 18, 2012, issued a revised ruling rescinding Mr. Lee's disqualification. Mr. Lee's original finishing position was restored and the penalty points were removed from his competition license.

The SOM notified all parties, including Mr. Ruiz, of their revised ruling, and provided all with a new 10 day period for requesting continuance of the appeal or to submit new appeals. Mr. Lee did not request continuance within the new appeal period.

DECISION
The SOM action rendered Mr. Lee's appeal moot and he did not request further action by the COA. Mr. Lee's petition is returned unheard and his entire appeal fee will be returned.

CLUB RACING COURT OF APPEALS

JUDGMENT OF THE COURT OF APPEALS
Elliott Skeer vs. SOM COA Ref. No 12-16-SP
September 27, 2012

FACTS IN BRIEF
Following post-race impound after the Group 3 race at Buttonwillow on September 2, 2012, Stephen Ruiz, STL #15, protested Elliott Skeer, STL #77, for failing to enter STL under the Spec Miata rules: absence of restrictor plate and failing to meet the minimum weight specifications for Spec Miata.

The Stewards of the Meeting (SOM) Jack Brabban, Maggie Jardine, and Marge Binks, Chair, heard testimony and reviewed witness statements from William Wells, Tech Steward responsible for Mazda automobiles, Mr. Ruiz, Mr. Skeer, and two other STL competitors that Mr. Ruiz protested. The SOM upheld Mr. Ruiz's protest, disqualified Mr. Skeer from the final results of the Group 3 race, and assessed four (4) penalty points against Mr. Skeer's competition license. Mr. Skeer appealed the decision of the SOM.

DATES OF THE COURT
The SCCA Court of Appeals (COA) Rick Mitchell, Jack Marr, and Michael West, Chairman, met on September 13, September 18, and September 27, 2012 to review, hear and render a decision on the appeal.

DOCUMENTS AND OTHER EVIDENCE RECEIVED AND REVIEWED
1. Letter of Appeal from Elliott Skeer, received September 10, 2012.
2. Official Observer's Report and related documents, received September 11, 2012.

3. Email from Marge Binks, SOM Chair, received September 18, 2012.

FINDINGS
Following notification of the appeal, Marge Binks, SOM Chair, requested that the Court of Appeals return this action to the SOM for further review. The SOM reconvened and on September 18, 2012, issued a revised ruling rescinding the disqualification. Mr. Skeer's original finishing position was restored and the penalty points were removed from his competition license.

The SOM notified all parties, including Mr. Ruiz, of their revised ruling, and provided all with a new 10 day period for requesting continuance of the appeal or to submit new appeals. Mr. Skeer did not request continuance within the new appeal period.

DECISION
The SOM action rendered Mr. Skeer's appeal moot and he did not request further action by the COA. Mr. Skeer's petition is returned unheard, and his entire appeal fee will be returned.

CLUB RACING COURT OF APPEALS

JUDGEMENT OF THE COURT OF APPEALS
Chris Qualls vs. SOM COA Ref. No. 12-17-RO
September 28, 2012

FACTS IN BRIEF
On September 19, 2012 at post-qualifying impound at the 2012 SCCA National Championship Runoffs, tech inspection determined the hood on Chris Qualls' Ford Mustang, AS #13, was not compliant with 2012 GCR 9.1.6.D.7.h. The hood was fiberglass and had a bump or blister in the middle of the hood rather than close to the cowl. Mr. Qualls' qualifying times were removed by a Chief Steward's Action (CSA) for a non-compliant hood. Mr. Qualls protested the CSA. The Stewards of the Meeting (SOM) John Nesbitt, A. G. Robbins, and Gloria Dickerson, Chair, heard Mr. Qualls' protest, obtained evidence, and upheld the CSA. The SOM interpreted GCR 9.1.6.D.7.h. as the hood needing to be a cowl hood with the bump or rise close to the cowl to be compliant. Mr. Qualls appealed the SOM decision.

DATES OF THE COURT
The Court of Appeals (COA), Jeff Niess, Tom Hoffman, and Rick Mitchell, Chairman, met on September 19, 2012 to review, hear, and render a decision on the appeal.

DOCUMENTS AND OTHER EVIDENCE RECEIVED AND REVIEWED
1. Mr. Qualls' Request for Appeal.
2. Chief Steward's Action (CSA).
3. Stewards of the Meeting Document File.
4. Statements from Rick Henshel, Technical Inspector.
5. Statements from Fred Brinkel,Tech Steward.
6. Statements from Fred Clark, CRB member representing the Club Racing Board (CRB).
7. Witness statement from Chris Albin – CRB Liaison to AS.
8. Witness statement from Jim Wheeler – CRB Chairman.
9. COA inspection of Mr. Qualls' hood.

FINDINGS
The CRB provided testimony regarding the reason for and the intent of the rule. The CRB stated that the GCR permits the use of fiberglass hoods. The CRB also stated that fiberglass hoods may have a bump or rise of up to 3 inches to provide clearance for the mandatory manifold, carburetor, and air cleaner. Mr. Qualls' fiberglass hood had a bump positioned to provide clearance for the air cleaner and the bump was not more than 3 inches in height. The COA finds that Mr. Qualls' interpretation of the rule is correct and meets the requirement of GCR 9.1.6.D.7.h.

DECISION
The decision of the SOM is overturned in its entirety based on new evidence provided by the CRB. Mr. Qualls' qualifying times are restored and his appeal fee, less the administrative amount retained by SCCA, will be returned.

CLUB RACING COURT OF APPEALS

JUDGEMENT OF THE COURT OF APPEALS
Chief Steward's Request for Action – Errors and Omissions
COA Ref. No. 12-18-RO
September 20, 2012

FACTS IN BRIEF
At Tech Inspection on September 20, 2012, at the 2012 SCCA National Championship Runoffs, Chief Steward Jim Rogaski was notified by the Chief of Tech that the cord length specifications for the alternate STU wing listed in GCR 9.1.4.2.B.2.f. do not match the dimensions for the wings that were supplied by the manufacturer. The wing is manufactured by APR Performance and they provided the dimensions that are listed in the GCR. The Chief Steward requested the Court of Appeals investigate this issue under authority granted in 2012 National Championship Runoffs Supplemental Regulation 12.5. (Errors and Omissions – Rules Interpretation)

DATES OF THE COURT
The COA Tom Hoffman, Jack Marr, and Michael West, Chairman, met on September 20, 2012 to review, hear, and render a decision on the Chief Steward's Rules Interpretation Request.

DOCUMENTS AND OTHER EVIDENCE RECEIVED AND REVIEWED
1. Chief Steward Errors and Omission – Rules Interpretation Request for Action received 9/20/2012.
2. 2012 National Championship Runoffs Supplemental Regulations
3. Witness statement from Jim Wheeler, Chairman, Club Racing Board. (CRB)
4. Witness statement from Peter Keane, CRB Liaison to the ST Committee.

FINDINGS
The wings provided by APR Performance do not fully meet the cord length dimensions that are stated in 2012 GCR 9.1.4.2.B.2.f. The CRB contacted the manufacturer and the manufacturer confirmed that they provided incorrect cord length dimensions for the SCCA specific wing. The correct cord length should be stated as not exceeding 8.75". The wing as supplied is the one that APR Performance agreed to provide to SCCA competitors and meets the maximum 8.75" cord length. The CRB stated the wing is acceptable and compliant with the STU rules. 2012 GCR specifications for the APR Performance wing GTC-200, part #AS-104801 will be corrected by the CRB at their earliest opportunity.

DECISION
Specifications for this wing are incorrectly stated in the 2012 GCR. The APR Performance wing GTC-200, part #AS-104801 is compliant as delivered.

CLUB RACING COURT OF APPEALS

JUDGEMENT OF THE COURT OF APPEALS
Ed Zabinski vs. SOM COA Ref. No. 12-19-RO
September 21, 2012

FACTS IN BRIEF
Following the SSB race at the 2012 National Championship Runoffs, Mr. Ralph Porter (#32 SSB) protested Mr. Ed Zabinski (#97 SSB) for passing him under a waving yellow flag. The protest was assigned to Stewards of the Meeting Tom Brown, Gary Meeker and JoAnne Jensen, Chair. The SOM held a hearing, viewed both in-car and Road America track side video, and interviewed witnesses.

The SOM determined that the pass did occur and moved Mr. Zabinski back three positions in class from third to sixth. This placed two penalty points on his license.

Mr. Zabinski appealed the severity of the penalty imposed by the SOM.

DATES OF THE COURT
The Court of Appeals (COA), Tom Hoffman, Jack Marr, and Michael West, Chairman, met on September 21, 2012 to review, hear, and render a decision on the appeal.

DOCUMENTS AND OTHER EVIDENCE RECEIVED AND REVIEWED
- Appeal letter from Ed Zabinski received September 21, 2012
- Hearing report from the SOM received September 21, 2012.
- In car video from Mr. Zabinski's car received September 21, 2012
- Testimony from JoAnne Jensen, SOM Chair received September 21, 2012
- Testimony from Ed Zabinski received September 21, 2012
-

FINDINGS
Mr. Zabinski presented no new evidence to the COA.

The hearing was conducted properly and the penalty imposed is within the authority of the SOM.

DECISION
The decision of the SOM is upheld in its entirety. Mr. Zabinski's appeal is well founded and his appeal fee, less the administrative portion retained by SCCA, is to be returned.

CLUB RACING COURT OF APPEALS

JUDGEMENT OF THE COURT OF APPEALS
Chief Steward's Request for Action – Errors and Omissions
COA Ref. No. 12-20-RO
September 21, 2012

FACTS IN BRIEF
At the conclusion of F500 qualifying session on September 20, 2012 at the National Championship Runoffs® at Road America, Chief Steward Jim Rogaski submitted a Request for Action under section 12.5 of the Supplemental Regulations, asking the Court to investigate a question of Errors or Omissions regarding 2012 GCR 9.1.1.E.14, paragraph one, Rotax 593 engine, Cometic gasket part number MA0242SP1020A.

Reportedly, the gasket associated with the existing part number is subject to breakage, and the manufacturer offers a more durable gasket of increased thickness – part number MA0242SP1063A. All other specifications of the two parts are identical. The manufacturer had not notified the SCCA of this alternative part.

The Chief Steward requested that part number MA0242SP1063A be added as an acceptable substitute for MA0242SP1020A under authority granted in 2012 National Championship Runoffs Supplemental Regulation 12.5. (Errors and Omissions – Rules Interpretation)

DATES OF THE COURT
The SCCA Court of Appeals (COA) Jeffrey Niess, Rick Mitchell, and Tom Hoffman, Chairman, met on September 21, 2012 to review, hear and render a decision on the Request for Action.

DOCUMENTS AND OTHER EVIDENCE RECEIVED AND REVIEWED
1. Errors and Omission – Rules Interpretation Request for Action from Jim Rogaski, Chief Steward, received September 21, 2012.
2. Witness statement from Fred Clark, Club Racing Board Representative of Formula Cars and Sports Racers, received September 21, 2012.
3. New Inlet Tract Restrictor (part number MA0242SP1063A)

FINDINGS
The current inlet tract restrictor for the Rotax 593 engine (part number MA0242SP1020A) is prone to breakage with the possibility of being ingested into the motor, causing significant damage. A new restrictor, which is thicker, but otherwise the same in dimension, has been created by the manufacturer. Fred Clark, Club Racing Representative for Formula Cars and Sports Racers testified that the new restrictor (part number MA0242SP1063A) is an acceptable alternate for the current part, and that the GCR will be updated to reflect this additional part.

DECISION
The request to add the additional restrictor plate option for the Rotax 593 engine (part number MA0242SP1063A) to 2012 GCR 9.1.1.E.14. is approved. The Club Racing Board will make the appropriate amendment to the GCR for this part.

CLUB RACING COURT OF APPEALS

JUDGEMENT OF THE COURT OF APPEALS
Robert Lentz vs. SOM COA Ref. No. 12-21-RO
September 23, 2012

FACTS IN BRIEF
Following the GTL race at the SCCA National Championship Runoffs on September 22, 2012, Robert Lentz, driver of car # 60, protested Kent Prather, driver of car #26, for perceived failure to pass the stall test (2012 GCR Appendix F, Single Inlet Restrictor (SIR) Section D.) .According to the 2012 GCR, the stall test requires the engine to stall within 4 seconds (at 2500 rpm) when the air inlet is fully blocked. Mr. Prather's car was stall tested six (6) times during post-race impound by tech inspectors failing three (3) times and then passing three (3) times. The car was deemed to be compliant by these Scrutineers. Mr. Lentz protested this ruling.

The Stewards of the Meeting (SOM) Tom Brown, Gary Meeker, and JoAnne Jensen, Chair, held a hearing, heard testimony,

interviewed witnesses, and found that the scrutineers followed the proper procedure in finding Mr. Prather's car in compliance with the SIR stall test. Mr. Lentz then appealed the SOM decision.

DATES OF THE COURT

The Court of Appeals (COA), Jeffrey Niess, Rick Mitchell, and Michael West, Chairman, met on September 23, 2012 to review, hear, and render a decision on the appeal.

DOCUMENTS AND OTHER EVIDENCE RECEIVED AND REVIEWED

- Appeal letter from Robert Lentz
- Evidence file and hearing report from the SOM
- Additional Witness Statements from GTL drivers Jonathan Goodale, Peter Zekert, and Roy Lopshire
- Testimony from JoAnne Jensen, SOM Chair.
- Testimony from Robert Lentz.

FINDINGS

In his appeal, Mr., Lentz stated that after the first three stall tests failed, a tech inspector "replaced/pressed down" on tape attached to the air box which resulted in Mr. Prather's car passing the stall test during three additional attempts." In addition Mr. Lentz presented three witness statements not available to the SOM to support his contention of possible changes to the air box. In each of these statements the witness described the actions of a tech inspector as appearing to touch Mr. Prather's air box during the stall test to allow the car to pass. These additional statements were inconsistent in their description of the inspector's action

The COA interviewed Ms. Jensen, SOM Chair, who stated a tech inspector told the SOM that the number of attempts by the tech inspectors to stall Mr. Prather's car was "routine to attempt to find compliance during testing, particularly when the results vary widely." The tech inspector also said that during the test he inadvertently touched the air box by leaning onto it with his hand and then touched the sides of the box to see if he had affected the air box.

Ms. Jensen stated the SOM considered these actions of the tech inspectors as accidental and that they did not affect the subsequent testing. The SOM conducted a thorough hearing of Mr. Lentz's protest, including his assertion that the air box was adjusted during the test, and determined the air box was not altered during the test.

DECISION

The Court of Appeals upholds the decision of the SOM in its entirety. Mr. Lentz's appeal is well founded and his appeal fee, less the administrative portion retained by SCCA, will be returned.

TIME TRIALS ADMINISTRATIVE COUNCIL

TTAC Minutes | October 10, 2012

The Time Trials Administrative Council met via conference call on 10/10/2012 at 7:30 PM CST.
The following members participated:

TTAC Chairman / CENDIV	Tony Machi
SWDIV	Kent Carter
GLDIV	Jerry Cabe
SOPAC	Roy Mallory
SEDIV	Craig Farr
MIDDIV	Chuck DeProw
NOPAC	Dave Deborde

Reports

- Approval of Minutes (September, 2012)(TONY MACHI)
- Report from the Safety Committee (Jerry Cabe)
- BOD director report- (Brian McCarthy)
- Chairman's comments (Tony Machi)

Old Business

- Operations Manual (Dave Deborde) Deborde advise he has a draft of the manual and will send it to rest of the Council for review. He felt the administrative revision made last year would be better contained the Operations manual than the rules.
- Strategic Plan: Tabled .
- Rule changes for 2013: A number of rules changes were discussed. Final draft for the BOD will be finalized at the November call.

New Business:

- Some discussion of the Convention activities as they relate to Time Trials.
- Discussion about the possibility of differentiating the four level of TT so that new members can better understand the differences between the levels.

Call ended at 9:30 PM CDT by the time limits of the conference.

SOLO EVENTS BOARD

SOLO EVENTS BOARD | September 26, 2012

The Solo Events Board met by conference call September 26th. Attending were SEB members Dave Feighner, Bryan Nemy, Steve Hudson, Mike Simanyi, Erik Strelnieks, Richard Holden, and Dave Hardy; John Walsh and Brian McCarthy of the BOD; Doug Gill and Brian Harmer of the National Staff. These minutes are presented in topical order rather than the order discussed.

Unless noted otherwise the effective date for all rule, class, and listing change proposals herein is *1/1/2014*

Comments regarding items published herein should be directed via the website www.sebscca.com.

CORRECTIONS TO BOD RECOMMENDATIONS

The SEB has issued the following correction to an item which was published as Recommended to the BOD in last month's Fastrack:

Under STREET MODIFIED the first item under the July heading should read:

Replace 16.1.N with the following..

N. *Removable OE hardtops,* T-Tops, targa tops, sunroofs, moon roofs, and similar roof-mounted panels may be removed/replaced with alternate panels provided that the area of interface is limited to the original perimeter of the t-top, sunroof, etc. or utilizes the OE panel mount points, and that the contour of any replacement panel surface does not vary from the contour of the part being replaced by more than 1 inch in any direction. The material used to construct the alternate panel and the method used to attach it to the interface is unrestricted. Any actuation mechanism and the associated wiring, if any, may be removed. *Vehicles utilizing alternate (non-OE) hardtops will be considered as open cars in regard to Section 3.3.1*

TIRE RACK SOLO CHAMPIONSHIPS

The SEB is requesting that members interested in being course designers for the 2013 Tire Rack Solo Nationals submit their qualifications in writing to the SEB via www.sebscca.com

ROAD TIRE

The SEB has decided, after considering member input, to retract the change which increased the Road Tire minimum required treadwear rating from 140. This will be reflected in the Supplemental Regulations for future National Tour events.

The SEB has also decided that for the Road Tire classes the following tire will be on the Exclusion List, effective 1/1/2013:

Toyo Proxes R1R 195/50-15 size only

STOCK

Vacancies exist on the Stock Advisory Committee (SAC), and the SEB encourages interested Club members to submit their qualifications in writing via www.sebscca.com.

The SAC and SEB have reviewed the following items, and thank these members for their input:

#8263, Sonic classing; this subject is addressed elsewhere herein via item 9014.
#8582, Shelby GT500
#8609, 8616, Stock class move comments
#8636, 8656, 8890, 8895, 8897, 8898, 8903, 8952, 8956, 8960, 8978, 8981, 8989, 8998, 9040, RT Tire comments.
#8748, M3 move to FS. This subject is addressed by a pending SEB recommendation to the BOD.
#9005, 9023, 9080, Stock class move comments

STREET TOURING

The STAC and SEB have reviewed the following items, and thank these members for their input:

#8577, 8583, 8584, 8585, 8591, 8597, 8604, 8607, 8611, 8613, 8618, 8619, 8624, 8630, 8631, 8639, 8642, 8646, 8647, 8648, 8653, 8654, 8667, 8669, 8676, 8682, 8697, 8703, 8707, 8709, 8710, 8711, 8712, 8724, 8725, 8735, 8736, 8739, 8755, 8757, 8763, 8768, 8776, 8778, 8780, 8781, 8783, 8806, 8835, 8842, 8852; Toyo 195 comments
#8598, 8678, 8953, 8982; ST Tire comments

STREET PREPARED

The SPAC and SEB have reviewed the following items, and thank these members for their input:

#8077, 8336, 8376, aero comments
#8532, FSP comments

#8825, Geo Storm GSi; this is addressed by the FSP re-organization which has been recommended to the BOD.
#8863, 8878, 8880, 8922; moves to FSP
#8917, Impreza classing; this is addressed by the FSP re-organization which has been recommended to the BOD.

STREET MODIFIED

Vacancies exist on the Street Modified Advisory Committee (SMAC), and the SEB encourages interested Club members to submit their qualifications in writing via www.sebscca.com.

The SMAC and SEB have reviewed the following items, and thank these members for the input:

#9042, 9050, 9051, 9057, 9058, 9061, 9063, 9071, 9075, 9076, 9280, SMF weight comments; this subject has been addressed by a pending SEB recommendation to the BOD.
#8737, 8995, 9139, 9172, SMF class comments; A recommendation has been made to the BOD by the SEB on this subject.
#8792, 9261, hard top clarification; this subject has been addressed by a pending SEB recommendation to the BOD.

PREPARED

Per the PAC, the following additional proposal is published here for member review and comment. The committee has requested that it be planned for recommendation to the BOD in December, with an effective date of 1/1/2013:

Change all listings for Level 1 prep vehicles in class G Prepared such that the maximum wheel width is ***8*** inches.

The following rule change proposals have been provided by the PAC and are published here for member review and comment:

Change 17.2.S by removing a sentence as follows:

"S. The hood, hatchback, deck lid and fenders may be lightened or replaced by ones of alternate material, provided the shape is similar to the original and does not confuse the identity of the vehicle. Factory bolt-on fenders may be replaced in their entirety. Cars with non-removable fenders may replace the front fender panels going forward from the foremost door opening and the rear fender panels going rearward from the rearmost door opening. Closed cars must not remove stock material above the horizontal line placed at the lowest point of the driver's door window opening, with the exception that OE removable panels (e.g., T-tops, targa tops, sunroofs) may be removed or replaced with panels of alternate material provided that the dimensions of any replacement panel do not vary from those of the original by more than one inch (1"; 25.4 mm) in any direction. The approval of alternate body panels does not authorize the use of belly pans forward of the firewall or aft of the front edge of the rear wheel opening. Ground effect tunnels and/or attempts to gain ground effects are also not authorized. Any such elements incorporated in the otherwise approved components must be removed or disabled. Front hoods and engine covers may be vented and/or louvered. The total area for all vents/louvers on a vehicle may not exceed 500 sq in (3225.8 sq cm), unless provided as standard equipment. The total area is measured as the total open area or the perimeter of the louvers when viewed from above. ~~*All openings must be covered with a wire mesh having openings no greater than ½ inch (0.500"; 12.7 mm).*~~ The location, number, and shape of vents/louvers is unrestricted provided they are fully contained on allowed panels. For vehicles having original vents/louvers exceeding these dimensions, no further openings are permitted. Louver openings must face rearward and may stand no higher than one inch (1.0", 25.4 mm) above the original surface. No additional scoops, cowls, bulges, or ducts are permitted unless specified in Appendix A."

COMMENT: The PAC proposes this amendment for member comment to remove the requirement for mesh over hood and engine cover openings to bring the Prepared category into alignment with other Solo categories (e.g. Modified). (#8267)

Change subsections in 17.2 as follows:

Change 17.2.B, second sentence, as follows:

"Reinforcing does not authorize the use of *underbody or* belly pans ~~*forward of the firewall or*~~ aft of the front edge of the front wheel opening." (#8312)

Change 17.2.S, fifth sentence, as follows:

"The approval of alternate body panels does not authorize the use of *underbody or* belly pans ~~*forward of the firewall or*~~ aft of the front edge of the front wheel opening." (#8312)

Reasoning: The PAC believes the proposed rule changes clarifies a contradiction in section 17.2. Specifically, the section 17.2 header, second sentence, states: "Restrictions regarding external body shape and belly pans are aimed at preventing attempts to obtain ground effects or streamlining."

Also, it should be noted that section 17.2.S, sixth and seventh sentences, curerntly state: "Ground effect tunnels and/or attempts to gain ground effects are also not authorized. Any such elements incorporated in the otherwise approved components must be removed or disabled."

Change Section 17.6.C by removing wording as follows:

"C. Addition, replacement, or modification of Anti-lock Braking Systems (ABS) is prohibited. The standard system may be removed in its entirety or disabled electrically in a manner not readily accessible while driving, but not altered in any other way. Sensors~~, control & proportioning valves,~~ and computers~~, and master cylinder~~ are considered part of the ABS system and may be not altered nor relocated." (#8752)

COMMENT: The PAC submits that the proposed amendment brings the Prepared rules with respect to braking systems and ABS systems into alignment with the related section of the Street Prepared rules. The proposed amendment smooths the transition from the Street Prepared category by eliminating a potential take-back between the categories.

The PAC and SEB have reviewed the following items, and thank these members for the input:

#7209, traction control comments. This subject is addressed by a pending SEB recommendation to the BOD.
#8347, 8372, 8528, 8544, 8545, 8546; CP engine comments. This subject is addressed by a pending SEB recommendation to the BOD.
#8588, 8666, 8670, 8690, 8911; XP weight comments. This subject is addressed by a pending SEB recommendation to the BOD.
#8589, 8807, 9277; XP width comments. This subject is addressed by a pending SEB recommendation to the BOD.
#8650, 8887, 8951, 8968, 9235; BP to FP comments. The subject proposal was withdrawn, as published in a prior Fastrack.

KART

The KAC and SEB have reviewed the following items, and thank these members for the input:

#8431, Weights for KML; This topic has been addressed via a proposal which was published in response to member item #7842.
#8871, Weight proposal comments. It is the intent of the KAC and SEB to make WF more advantageous than the KT100, thus the weights have been changed accordingly per that policy.

NOT RECOMMENDED

Stock

#8587, move RS4 to FS. The Audi vehicles currently classed in BS do not meet the current competitive balance of FS given their horsepower and drivetrain configuration.

Street Touring

#8633, 8635, 8641, 8649, 8658; standalone ECU proposals. Per the STAC, standalone ECU's are not in the spirit of the category, nor can parity for specific cars be guaranteed through general allowances. Further, the ECU allowances were recently opened up and rules stability dictates they remain unchanged for awhile.

#8687, 8795, 8839, 9020, 9217; FR-S/BRZ classing. This subject was addressed by a listing published in the October Fastrack in response to member item #7596.

#8719, boost proposal. Per the STAC, this allowance does not meet the philosophy of the category.

#8722, BMW E46 and E9x classing proposal. Per the STAC, the subject cars would exceed the performance of existing front-runners in STX.

#8893, catalytic converter allowance. Per the STAC, It is not consistent with the philosophy of the category to attempt to meet California emissions standards for catalytic converters.

Street Modified

#8493; GTR classing. Per the SMAC, the Nissan GT-R fits the footprint of class SM and has not demonstrated performance-wise that it does not belong there.

#9279; roll bars allowance. Per the SMAC, SM already has allowances for rollcages/rollbars as mentioned in 3.3.2 in the Solo rule book. The rule states a bar or cage must meet requirements of 9.4 of the GCR. The expectation in SM would be to follow those rules, while maintaining all interior pieces that don't directly interfere with the installation.

#9335; RX-7 in SM, seating interpretation. Per the SMAC, the 2nd Gen RX-7 is pretty clearly sports car based in manufacturer literature, and it closely fits the 2+2 example used in the rulebook for Datsun Z cars which are in SSM.

Prepared

#8808; combine DP and EP. The PAC will continue to monitor the competitive balance between the diverse drivetrains in EP in order to make adjustments and maintain the competitive balance in the class.

#9056; move Mazdaspeed Miata out of FP. The PAC will continue to monitor the competitve balance in FP, particularly with respect to the diverse drivetrains and powertrains presently populating the class.

Kart

#8728, weights, Rotax, World Formula proposals and comments.

#8838, kart classing proposal. Under existing rules these proposed karts are legal to run in KM at the national level.

#8846, Briggs WF restrictor proposal. The current restrictor was chosen by the KAC and SEB for reliability and safety at all events.

TECH BULLETINS

Stock

1. The following new listings, effective immediately upon publication, have been recommended by the SAC and approved by the SEB:

Chevrolet Sonic (2012-2013)	HS (#8263, 9014)

RALLYCROSS BOARD

RALLYCROSS BOARD MINUTES | October 10, 2012

The RallyCross Board (RXB) met via conference call October 10. Attending were Ken Cashion, Chairman, Bob Ricker, Brent Blakely, Karl Sealander, Warren Elliott, Stephen Hyatt and Ron Foley. Also in attendance were Todd Butler, BoD liaison, and Howard Duncan and Brian Harmer from the National office.

The Secretary acknowledges that these minutes may not be in chronological order.

Committee Reports

- RallyCross Safety Committee (Bob Ricker): The Safety Steward Training presentation was forwarded to Risk Management for review. No response has been received at this date. Ricker and Todd Butler will follow up.

  No Safety Steward training sessions have been conducted in Colorado yet. The Rocky Mountain Divisional RallyCross Steward specifically needing the training has shadowed the Safety Steward at a recent event, so steps towards his licensing are happening. Sealander will contact the Region to follow up.

  Ricker reported that no incident reports have been received since the last RXB meeting.

- RallyCross Rules Committee (Warren Elliott): Rules changes for the 2013 RallyCross Rules (RXR) will be sent out to the RXB within a week for review. The RXB will vote on those changes at the November meeting and then forward them to the BoD for their approval.

  A tech bulletin clarifying the Stock Category tire size allowances will be posted at the website. It is currently posted at the forums. Clarifying language will also be included in the 2013 RXR.

  The sections of the 2013 RXR mandatory for all RallyCross events will each be highlighted in an effort to make it more user-friendly.

  Pete Remner has accepted a position on the Rules Committee.

  The RXB received a letter from a member pointing out some confusing language in the Prepared Category rules regarding catalytic converters. The RXB discussed the issue and decided to use an errors and omissions to explicitly state that in the Prepared Category catalytic converters are expected to be present on a vehicle originally equipped with one. The 2013 RXR will be adjusted accordingly.

- National Championship Committee (Brent Blakely): Blakely requested committee members for 2013 event planning.

  The RXB discussed venue options for 2013. The plan is to return to Tulsa for an additional year while searching for a 2014 site. Howard Duncan reported that the I-80 Speedway site should be available for 2014 and could serve as a backup earlier if needed.

- Marketing Committee (Ron Foley): National Challenge results are still not all available at the SCCA website. Those results should be made available to the National office for website publication and for informational purposes such as determining award recipients.

- Divisional Steward Liaison (Stephen Hyatt): Hyatt reported on a successful Regional programs conference call last month. There were 13 Regional representatives in attendance, which represents approximately 20% of the active Regions. The Regions requested more feedback and input. The next meeting is scheduled for February 11, 2013.

  Hyatt reported that Charles Wright has agreed to be the chairman of the Divisional RallyCross Stewards.

  Hyatt requested clarification regarding the Divisional RallyCross Steward appointment process. Some changes are anticipated within the next year.

- Forum Activity: Feedback thus far on the forum regarding the National Championship event has been positive.

Old Business

- Alternative processes for Safety Steward licensing in case of conflict: Tabled until a later meeting.

- Class champions list: Cashion will provide list of all National class champions for publication of the 2013 RXR.

New Business

- National Championship event discussion: Safety could be more proactive for quicker course adjustments. Course layout should be completed a day or two in advance. For the Tulsa site, two smaller independent courses could be set for Saturday and subsequently linked together for Sunday course. The Town Hall was successful with positive feedback. Using a moderator for the Town Hall worked well. The missed gate penalty was discussed, along with options when several gates are missed in succession. Grid location was good but the layout resulted in some congestion. Run order regarding 2-driver cars needs attention. Concession services were not adequate. Outside food services would be an improvement. Number of runs should be set and adhered to by using shorter courses, however competitors should understand that problems can and do arise and will effect the event schedule. Radio protocol and practices needs to be improved. Water truck usage and application should be more consistent from heat to heat. Cashion requested that Foley work with the National office to send a post-event survey to all competitors.

- 2013 National Challenge proposal: Howard Duncan presented attendance statistics from the 2012 National Challenge events and proposed doing 3 or 4 signature RallyCross events. Cashion advocated staying with the current format for another year or two giving the Divisions a chance to grow their programs and events. As an incentive for National Challenge attendance, Cashion suggested finding reasonable compensation for the TripleCross Award winners. Duncan requested that Hyatt ask on the Divisional Steward calls and the Regional programs call for suggestions of effective ways to use budgeted resources from the National office.

- 2013 National Challenge scheduling: Earlier scheduling would help attendance. Cashion requested using the Divisional Steward calls to get dates set, the Regional programs calls to promote events, and National office support for a few of the bigger events.

Next meeting: November 7, 2012

Submitted by Karl Sealander, RXB Secretary

ROAD RALLY BOARD

ROAD RALLY BOARD MINUTES | October 2, 2012

The RoadRally Board met via conference call on October 2, 2012; called to order at 7:33 pm CDT.

In attendance: Chairman Rich Bireta, Jeanne English, Chuck Hanson, Sasha Lanz, Clarence Westberg, Deena Rowland from the National Office, BOD liaison Steve Harris; not in attendance: RRB member Jim Wakemen, Howard Duncan from the National Office, BOD liaison Bob Lybarger.

September minutes approved (Sasha/Clarence/passed).

Old Business:

1) USRRC:
   a. 2013: we received an offer to host 2013 USRRC from Arizona Border region; we have some concerns, Rich has written a response to them requesting further information on how they will address our concerns (posted in our Dropbox). **Motion** to send our response: Clarence/Sasha/passed
   b. 2012: Town Hall format: Rich will present opening comments, then open it up to the floor and respond as appropriate; Jeanne will take minutes
   c. 2012: we received a question from the Detroit Region regarding entry in their events by the other USRRC rallymasters; Rich has written a response stating our approval (posted in our Dropbox); Chuck (the event liaison) will send it.
2) National Events Committee appointment: discussion in Executive Session. **Motion**: approve Dave Weiman as a member of this committee: Jeanne/Clarence/passed.
3) 2013 Rules Change. Review Experience-Based Classes proposal:
   a. We have not yet received a response from the Rules Committee, Jeanne will follow up.
   b. Logistics for updating 2013 RRRs: we would like to take action at our November meeting so it can go to the BOD for their December meeting.
4) RRB Recurring Activities Calendar: Chuck has further revised it, Rich will revise based on Chuck's comments and put it back in the Dropbox.

Road Rally Events Calendar at www.scca.com:

Discussion about proposed position:

a. Sanction requests cause entry in scca.com Rally Events (current process, Deena updates)
b. Jeanne maintains "Road Rally Calendar"
c. Add link right under "Rally Events" to "Road Rally Calendar", which is Jeanne's calendar - update Dropbox excel file
d. A broader calendar (including non-SCCA sanctioned events, end-user-maintained) is a topic for the broader road rally community to address; we don't want to list non-SCCA events on the SCCA website

Motion: adopt this above position as our official calendar practice: Jeanne/Clarence/passed

6) Committee Reports:
   a. National Committee – Clarence.
      i. 2013 National Date Requests (tentative unless listed with a firm date): Yucatan Safari, La Crosse, 12/8/12; AZ Border, March; Indy, June; CAST in Stone, Detroit, July?, Hurdle, Pittsburgh, 8/10/13; DC, late Aug or early Oct; Oktoberally and Badger Trails, LOL, 9/14-15/13; USRRC, Oct; St. Louis, no dates yet
      ii. 2012 – DC rallies, 10/6-7/12, Clarence now liaison, good to go.
   b. Regional Committee – Rich put Regional Development Comm. work items in the Dropbox, 3 easy items, 3 not-so-easy items; members Len Picton and Patrick Strong (Jeanne will verify Patrick).

Break 8:30, reconvened 8:45

New Business:

1) GTA Committee: Steve Gaddy has volunteered to be on this committee, Rich talked to him in La Crosse; **Motion**: to approve Steve as a member of the GTA Committee: Sasha/Clarence/passed
2) Review RRB To Do/Backlog list (in Dropbox): Rich asked last month for us to pick our top 5 items and so far only Sasha and Rich submitted lists; other RRB members, please submit your lists so we can then come up with a workable list of items to be done.
3) For November Meeting: talk about presentations/meetings for the SCCA Convention; 2013 RRB Member recommendations to BOD; review To Do/Backlog top 5 lists (item 2 above).
4) The RRB received a letter of resignation from Eva Ames.
5) RRB vacancies – post 'one or more' vacancies to be filled for 2013.
6) Reassign Eva's Communications Committee duties (SCCA Forum, Facebook, yahoo list, etc) – Rich will do Forum

Closing:

1) What is your “one RRB-task” this month?
2) All RRB members and Deena are going to the USRRC.
3) Steve Harris commented that the BOD sees and likes the progress that the RRB is making.

Next meeting *Monday*, November 5, 2012

Meeting adjourned at 9:10 pm CDT

Respectfully submitted,

Jeanne English, RRB Secretary

QUICK LINKS

The following items have been removed from regular inclusion in Fastrack News and can be found on SCCA's Web site at the following links:

CLUB RACING

Runoffs Event page: http://www.scca.com/runoffs
Accredited Driver Licensing Schools: http://www.scca.com/clubracing/content.cfm?cid=50864
Forms: http://www.scca.com/downloads/#club
Technical Forms: http://www.scca.com/clubracing/content.cfm?cid=44472
General Competition Rules (GCR): http://www.scca.com/clubracing/content.cfm?cid=44472

SOLO

40th Tire Rack SCCA Solo National Championships: http://www.scca.com/solonationals
Forms: http://www.scca.com/downloads/#solo
Rulebook: http://www.scca.com/downloads/#solo

RALLY

Forms: http://www.scca.com/downloads/
Rulebooks: http://www.scca.com/downloads/

SCCA NATIONAL CONVENTION

Event page: http://www.scca.com/events/index.cfm?eid=4495

EVENT CALENDAR: http://www.scca.com/events/

Fastrack news
official SCCA member notification
EFFECTIVE FIRST DAY OF THE MONTH UNLESS OTHERWISE NOTED
December 2012

CONTENTS

BOARD OF DIRECTORS	**1**
CLUB RACING	**2**
CRB Minutes	2
Technical Bulletin	9
Court of Appeals	None
Time Trials Admin. Council	None
SOLO	**13**
SEB Minutes	13
RALLY	**19**
RallyCross	19
RoadRally	23
LINKS	**25**

BOARD OF DIRECTORS

SCCA Board of Directors Minutes | October 26, 2012

SCCA Board of Directors held a conference call Monday October 26, 2012 commencing at 7PM CDT. Directors participating were: Dick Patullo, Jerry Wannarka, Robin Langlotz, Steve Harris, Bob Lybarger, Lisa Noble, R. David Jones, Bill Kephart, John Walsh, Phil Creighton, Brian McCarthy. Todd Butler and Michael Lewis were unable to attend due to travel. Wannarka as Chair carried proxy vote for Lewis and Butler. Aimee Thoennes, Executive Assistant also participated in the call.

The meeting was called to order at 3:00 pm by Chairman Wannarka.

Discussion over the impact of the current rules/racing seasons on the southern regions which would benefit from national races late in the year versus the desire to fairly enforce the policies currently in place.

Note: Post Conference Call, the Florida Region re-scheduled the date and track to Palm Beach International Raceway on January 11-13, 2013.

MOTION: Because of a track date conflict, that the Board of Directors grant a one-time waiver to GCR appendix B.1.2.f allowing the Florida Region to hold their traditional Winter Nationals on December 28, 29 and 30th 2012. That the supplemental regulations be noted specifically to indicated the event will be run under 2013 rules as noted through December 2012 FasTrack (which will be posted on Nov 20th). And with the provision that the Region's representative, Chief Steward and Chairman of the event review the changes that take effect on 1/1 in the GCR so they are prepared and can handle issues that may come up as a result. Langlotz/Kephart. Opposed: Creighton, McCarthy, Jones, Lybarger, Harris, Wannarka. PASSED 7-6.

NOTE: The Board of Directors will be considering a motion in the future to change the current policy regarding the racing and rules making seasons.

MOTION: To adjourn. Lybarger/Creighton.

CLUB RACING BOARD

SCCA Club Racing Board Minutes | November 6, 2012

The Club Racing Board met by teleconference on November 6, 2012. Participating were Jim Wheeler, Chairman; Chris Albin, Tony Ave, Fred Clark, Jim Drago, Peter Keane, Mirl Swan, and Pam Richardson, secretary. Also participating were: Todd Butler and Richard Patullo, BoD liaisons; Terry Ozment, Vice President of Club Racing; Butch Kummer, Director of Club Racing; John Bauer, Technical Manager, Club Racing; Ryan Miles, Technical Coordinator, Club Racing; and John LaRue, guest. The following decisions were made:

SUGGESTED RULES FOR 2013

The following subjects will be referred to the Board of Directors for approval. Address all comments, both for and against, to the Club Racing Board. It is the BoD's policy to withhold voting on a rules change until there has been input from the membership on the presented rules. Member input is suggested and encouraged. Please send your comments via the form at www.clubracingboard.com.

GCR

1. #9700 (John Bauer) Update Drug and Alcohol Rule

The CRB recommends this rule become effective 1/1/2013:

Change GCR 2.3.1.B: B. The use at an event by any participant of any Federal Schedule 1 controlled substance (including marijuana), or other drugs that affect the ability of the participant to safely participate in the event or may otherwise adversely affect the safety or integrity of the event is specifically prohibited. *Certain prescription and non-prescription medicines may also impair performance so competent medical authority should be consulted prior to using such medicines and participating in the event.* Any participant who violates this prohibition (rest of section remains unchanged)

Production

HP

1. #9328 (David Ellenwood) Clarification/Possible GCR Error

The CRB recommends this rule become effective 1/1/2013.

In HP, Volkswagen Golf (GTI, GT,GL) and Volkswagen Jetta 1780 (85-91) change the notes as follows: "Comp. Ratio limited to 1~~1.5:1~~ *12.0:1*."

Super Touring

STL

1. #9586 (Club Racing Board) Transmissions

The CRB recommends this rule become effective 1/1/2013.

Change 9.1.4.3.E.3: 3. Either the ~~OEM~~ *original* transmission or an alternate transmission must be used; the alternate transmission must be from the same manufacturer as the vehicle (i.e., an Acura transmission may be installed in a Honda car). Alternate transmissions must be used in their entirety; *any OEM gearsets that fit w/o any modifications to gears, shafts, and/or case* ~~Retrofitting OEM complete gear sets in an alternate transmission case~~ is *are* permitted.

SUGGESTED RULES FOR 2014

The following subjects will be referred to the Board of Directors for approval. Address all comments, both for and against, to the Club Racing Board. It is the BoD's policy to withhold voting on a rules change until there has been input from the membership on the presented rules. Member input is suggested and encouraged. Please send your comments via the form at www.clubracingboard.com.

GCR

None.

Formula/Sports Racer

None.

Grand Touring

None.

Improved Touring

1. #9237 (Matthew Green) Allow Aftermarket Coolant Overflow Tanks

Thank you for your request. Add as new section 9.1.3.D.3.h: h. Non-pressurized coolant overflow tanks may be replaced with aftermarket units. These replacements must have a minimum volume of 1 pint, and a maximum not to exceed the larger of the stock tank or 2 quarts. Tanks may not be mounted in the driver/passenger compartment.

Super Touring

None.

Production
HP
1. #9236 (Kevin Dennis) Brake Upgrade PL510
Thank you for your request. In the specification line for the HP Nissan/Datsun PL510 add to the "brakes alt" column the following "Nissan/Datsun 240Z/260Z/280Z front rotors and calipers and rear aluminum drums are permitted." Also add to the "Notes" column after the word "choke(s)" and before the word "allowed" the following "on I.R. manifold".

American Sedan
1. #8507 (Dean Palmer) Allow 17x8 factory Mustang wheels.
Thank you for your request. Effective 1/1/2014, please change 9.1.6.D.6.a.1: 1. Maximum wheel diameter is ~~16~~ *17* inches, unless *otherwise* indicated within the vehicle specification line.

Spec Miata
None.

Touring
None.

WHAT DO YOU THINK?
None.

MEMBER ADVISORIES
None.

NOT APPROVED BY THE CRB

GCR
None.

Formula/Sports Racer
DSR
1. #8826 (Greg Case) Formula and Sports Racing Non Metallic Chassis Rules
Thank you for your letter. The current system for building and testing cars is adequate and the CRB has no plans to change it. Also, the CRB has no plans to move away from FIA crash testing.

FF
1. #9557 (Sidney Crane) Clutch Issues on Honda Powered FF
Thank you for your letter. The CRB does not have sufficient data to determine if there is an inherent weakness in the OEM clutch components, which might cause failure. However, the CRB will continue to monitor this situation via additional feedback from competitors.

FM
2. #9155 (Club Racing Board) Future of FM Engines
Member input from the FM class showed overwhelming support (21 letters) that FM remain a sealed engine class and retain the current spec engine supplier. Therefore, the CRB has no plans to make changes to the FM engine or its supplier.

FV
1. #9182 (Derek Harding) Head/Helmet Surround Padding
Thank you for your letter. The rules are adequate as written.

2. #9401 (Matthew Clark) FV Wheel Covers
Thank you for your concern. The rule governing this subject has been in the GCR for many years. To reduce expense, competitors are free to fabricate them. The rule is adequate as written.

S2000
1. #8674 (John Fergus) Engine Choices and Enterprise Sports Racer
Thank you for your letter. S2000 ECU choices have been approved for 2013.

2. #8818 (Tony Sleath) S2000 Evolution
Thank you for your letter. The S2000 rules will remain unchanged for 2013 from that which was approved for 2012. In 2014 the current S2000 class will become regional only and a new class SR2 will be established.

Grand Touring
None.

Improved Touring
ITB
1. #9530 (Ian Stewart) Allow a Fix for the Transmission Issue on the R50 Model Cooper
Thank you for your letter. Alternate transmissions are not within class philosophy.

ITC
1. #9387 (Evan Webb) Allow Selective Dual Classing for ITC and ITB
Thank you for your request and your insight. The CRB has no plans to allow dual classing in IT. However, the CRB recommends you bring this issue to your region to determine if your car can be classified in a region specific class to improve your competition experience.

Super Touring
STU
1. #9558 (Alan Lesher) Allow SIR on STU Turbo Cars
Thank you for your request. The CRB is quite satisfied with turbocharged cars using TIRs and has no plans to use SIRs.

2. #9596 (Alan Lesher) Allow Rear Diffuser in STU
Thank you for your letter. The use of non-OEM rear diffusers in ST is not within the philosophy of the class. The CRB has no plans to make this change.

Production
EP
1. #9443 (Greg Ira) Allow an 8-inch Wide Wheel
Thank you for your letter. The wheel sizes specified in production are consistent with the wheel sizes suggested by Hoosier for its radials. However, this situation including tire availability and manufacturer recommendations will continue to be monitored by the CRB.

2. #9455 (Guy Marvin) Add 100 pounds Weight 99 Miata
Thank you for your request. The best race time for the EP 1999 Miata was approx 4/10ths of a second faster than the Datsun 240-Z and 8/10ths of a second faster than the RX-3. Other front running cars in EP posted faster lap times than in prior years indicating development is progressing. At present the EP field is competitive.

FP
1. #9144 (Dean Manion) Change rim width restriction to contact width for Prod and GT
This change is not recommended for Production cars at this time.

2. #9397 (Bill Blust) FP and HP Spridgets at Road America Runoffs
Thank you for your letter. It is not feasible to create a separate set of specifications just for cars competing at the Runoffs.

HP
1. #9453 (Johannes Krauss) Scirocco Weight Reduction
Thank you for your letter. Currently, the car's weight is appropriate; however, the CRB will continue to monitor the performance and progress of this car.

2. #9454 (Johannes Krauss) Allow 1780 Engine in 1975-1981 Scirocco
Thank you for your request. The proposed change is not consistent with class philosophy. An exception was made previously for the Austin-Healey. The reason for the exception does not exist for this newer car.

American Sedan
1. #8513 (Cheyne Daggett) Allow Alternate Mustang Wheel.
Thank you for your request. The 2011-13 Mustang has been classified in American Sedan, Restricted Preparation, effective 1/1/2013. Please see November 2012 Fastrack, letter #9524 for wheel and brake information in the vehicle specification line.

2. #9372 (Willard Cantrell) Replacement of the Lower Control Arm on 3rd Generation GM Cars
Thank you for your request. The CRB can determine no availability issue with 1982-92 Camaro/Firebird rear lower control arms. You are welcome to contact the American Sedan Advisory Committee for locations if needed. The rule will remain as written.

3. #9711 (Club Racing Board) Not Recommended Portion of Letter #8668 -- Rear Spoilers
Rear spoilers for all cars must follow 9.1.6.D.7.b.8. The CRB has no plans to include a specific rear spoiler for the 2011-13 Restricted Preparation Mustang as part of its specification line.

Spec Miata
None.

Touring
None.

Super Production
SP
1. #9703 (Richard Crowell) Do Not Require Fuel Sample Port on Super Production Cars
Thank you for your request. The CRB has no plans to change this rule.

PREVIOUSLY ADDRESSED

GCR
None.

Formula/Sports Racer
F
1. #9183 (John D'Addario) Letter #8803 - Oppose
The proposal in letter #8803 was rejected by the Board of Directors in their October 12-13, 2012 meeting.

2. #9185 (David Harmison) Reject Connecting Rod Weight Reduction
The proposal in letter #8803 was rejected by the Board of Directors in their October 12-13, 2012 meeting.

3. #9186 (Reid Hazelton) DO NOT IMPLEMENT RULE CHANGE #8803
The proposal in letter #8803 was rejected by the Board of Directors in their October 12-13, 2012 meeting.

FA
1. #9415 (Jeff Kowalik) Open Shock Valving on 016
Thank you for your letter. The Board of Directors approved the new FA engine table in their October 12-13, 2012 meeting. This new table has taken care of your request. Please see: http://www.scca.com/clubracing/content.cfm?cid=44472.

2. #9356 (and 27 additional letters) (Lee Alexander and Various) FA Engine Table
Thank you for your letters. Please see letter #9030, October 2012 Fastrack, which was approved by the Board of Directors in their October 12-13, 2012 and will be effective 1/1/2013.

FC
1. #9044 (and 18 additional letters) (David Klutsenbaker and Various) Proposed FC/FF Class Prep Rules
Thank you for your letter. Please see the FF/FC rules approved by the Board of Directors in their October 12-13, 2012 meeting. These rules will be effective 1/1/2013. The rules are located at http://www.scca.com/clubracing/content.cfm?cid=44472.

FF
1. #9048 (and 8 additional letters) (Reid Hazelton and Various) Discard Proposed FF/FC Construction Rules Rewrite
Thank you for your letter. Please see the FF/FC rules approved by the Board of Directors in their October 12-13, 2012 meeting. These rules will be effective 1/1/2013. The rules are located at http://www.scca.com/clubracing/content.cfm?cid=44472.

Grand Touring
1. #9087 (Jay Puskenalis) 15-year Old Racers
The CRB is passing along your suggestion.

Improved Touring
None.

Super Touring
None.

Production
FP
1. #9398 (Bill Blust) Allow Spridget BugEye in FP
Thank you for your request. Please see letter #9391 (Technical Bulletin).

HP
1. #9409 (Tom Hannagan) Brake Alternative to Allow 240Z/260Z/280Z Caliper/Rotor

Thank you for your letter. Please see letter #9236.

American Sedan
1. #8511 (Cheyne Daggett) Allow the 2010-13 Mustang in RP.
Thank you for your request. The 2011-13 Mustang has been classified in American Sedan, Restricted Preparation, effective 1/1/2013. Please see November 2012 Fastrack, letter #9524.

2. #8542 (and 21 other letters) (Cheyne Daggett and Various) 17" Wheels
Thank you for your letter. Please see the response to letter #8507.

3. #8668 (Cheyne Daggett) Driveshaft and Rear Spoiler
Thank you for your request. The approved 2013 American Sedan rules for both Full and Restricted Preparation allow one piece driveshafts of steel or aluminum construction. Please see letter #9711 for the NR portion of this letter.

4. #8919 (DEAN PALMER) FEEDBACK PER 17X8 WHEEL REQUEST
Thank you for your letter. The date of implementation is listed in letter #8507.

5. #8997 (Scott Sanda) Engine Swap
Thank you for your request. The 2011-13 Mustang has been classified in American Sedan, Restricted Preparation, effective 1/1/2013. Please see November 2012 Fastrack, letter #9524. American Sedan does not have a VIN requirement. However, the vehicle's specification line requires the use of 2011-13 Mustang Coupe GT 5.0L, meaning that a V6 2011-13 Mustang chassis may be used to build an American Sedan car with the Mustang Coupe GT 5.0L engine. The use of the 5.0L Boss 302 engine is not permitted in American Sedan.

6. #9021 (Matt Regan) Allow V-6 to Convert to 5.0 Engine
Thank you for your request. Please see letter #8997.

Spec Miata
1. #8273 (Chuck Dawson) Wire Harness Repair
Thank you for your letter. SM wiring harness repair falls under 9.1.8.C.4.K: k. All chassis/structural/electrical repairs, if performed, shall be in concurrence with factory procedures, specifications, and dimensions. Unless specifically authorized by the manufacturer for repair or allowed by these rules, no reinforcement, i.e., seam welding, material addition, etc., is permitted.

Touring
None.

NO ACTION REQUIRED

GCR
None.

Formula/Sports Racer
DSR
1. #8796 (Mark Osterbrink) Clarification on DSR Engine Rules
Thank you for your inquiry. You are interpreting 9.1.9.A.2.b correctly.

2. #8827 (Greg Case) Fender Opening Rules
Thank you for your letter. There is no data to support that SCCA cars would be safer with top of tire openings. Other organizations have adopted rules based on their particular needs, experience and data. Also, the louvers are not required and the competitor has the option of building their own louvers at lower cost. The rules are adequate as written.

F5
1. #9680 (Jim Murphy) Formula 600 Challenge Money Series
Thank you for the information.

SR
1. #9324 (David Ferguson) Discussion Topics for DSR/CSR Combination Ad Hoc
Thank you for your thoughtful letter offering well reasoned ideas. With your permission the letter has been passed on to the SR1 Ad Hoc committee. Again thank you very much for been part of the solution!

SRF
1. #9389 (Ton Brown) Re-think Classifying SRF and Certain Other Groups Together

Thank you for your letter. The rules for class groupings are adequate as written.

2. #9592 (Steven Thomas) Combining groups with SRF
Thank you for your letter. The rules for class groupings are adequate as written.

Production
EP
1. #9180 (Michael Heintzman) #9046 - SCCA staff
Thank you for your inquiry. The proposed rule change does not apply to the production classes. It is believed that 9.1.5.D.9.a.8.A. is clear with respect to windshields on open cars. There is no minimum thickness specification for these windshields.

Super Touring
STO
1. #8446 (Charles Rodholm) Splitter\Undertray Approval
Thank you for your letter. The Super Touring Advisory Committee has been working to contact you and has been unable to. Please submit a new letter with additional contact information.

STL
1. #9561 (Corey Roun) Allow OEM Compression for K20
Thank you for your letter. 11:1 is the stock compression ratio for these engines, and is already compliant to STL specs. Stock cam valve lift exceeds .425 and must be replaced to be compliant on these engines.

2. #9562 (Corey Roun) Add Ineligible Engines
Thank you for your letter. The non-North American engines you listed are non-compliant in STL. Should one wish to request they be classified, one should submit a letter through the CRB letter system and include the engine section of the VTS (Vehicle Tech Sheet) and the engine sections of the Factory Service Manual.

American Sedan
1. #8916 (Cheyne Daggett) 17x8 Wheel Input
Thank you for your letter. As this is a duplicate of your letter #8542, the CRB appreciates your enthusiasm, but did not include duplicate responses to letter #8507, What Do You Think, in the decision making process.

2. #9003 (Darryl Seefeldt) Clarification to Letter ID 9002
Thank you for your clarification to your letter #9002. It is noted.

Spec Miata
1. #9309 (and 15 other letters) (Mike Collins and Various) Restrictor Plate
Thank you for your suggestion. The restrictor sizes are appropriate as listed.

RESUMES
1. #8644 (Stan Clayton) Volunteer for Ad Hoc Committee for the Combined CSR/DSR
Thank you for volunteering. Currently, this committee is fully staffed; however, the CRB will keep your resume on file and contact you if needed.

2. #8662 (David Locke) Submission of FSRAC Ad Hoc Committee Resume
David Locke has been appointed to and is currently serving on this committee.

3. #8665 (Kevin Kloepfer) Sport Racer Committee
Thank you for volunteering. Currently, this committee is fully staffed; however, the CRB will keep your resume on file and contact you if needed.

4. #8686 (Jim Downing) Join the AD HOC Committee/CSR/DSR
Jim Downing has been appointed to and is currently serving on this committee.

5. #8701 (Matt Graham) Resume for CSR/DSR and SR2 Ad Hoc Committee
Matt Graham has been appointed to and is currently serving on this committee.

6. #8717 (Vaughan Scott) Resume Submission for SR2 Ad-Hoc Committee
Vaughan Scott has been appointed to and is currently serving on this committee.

7. #9017 (Michael Alfred) Add Me to the CSR/DSR/SR-2 Class New Ad Hoc Group
Michael Alfred has been appointed to and is currently serving on this committee.

8. #9041 (S. Jay Novak) Volunteer to Work on SR2 Committee
S. Jay Novak has been appointed to and is currently serving on this committee.

9. #9043 (Marc Walker) SR2 Class Rules Committee
Mark Walker has been appointed to and is currently serving on this committee.

10. #9045 (David Ferguson) Volunteer for SR2 Advisory Committee
David Ferguson has been appointed to and is currently serving on this committee.

11. #9047 (Victor Culbertson) Be a Member of SR 2 Ad Hoc Committee
Victor Culbertson has been appointed to and is currently serving on this committee.

12. #9060 (Corey Shaw) SR2 - I Volunteer for Rules Committee
Thank you for volunteering. Currently, this committee is fully staffed; however, the CRB will keep your resume on file and contact you if needed.

13. #9066 (W Burns Moore) Request to Be on the SR2 Board
W Burns Moore has been appointed to and is currently serving on this committee.

14. #9077 (Mark Mercer) Sports Racer 2 Committee
Thank you for volunteering. Currently, this committee is fully staffed; however, the CRB will keep your resume on file and contact you if needed.

15. #9092 (Bart Wolf) SR2 New Class
Bart Wolf has been appointed to and is currently serving on this committee.

16. #9094 (Jay Messenger) SR2 Ad Hoc Committee Resume
Jay Messenger has been appointed to and is currently serving on this committee.

17. #9151 (Jim Rawson) Sports Racer 2 Class Ad Hoc Committee
Jim Rawson has been appointed to and is currently serving on this committee.

18. #9152 (Vince LaManna) SR2 Ad Hoc Committee
Thank you for volunteering. Currently, this committee is fully staffed; however the CRB will keep your resume on file and contact you if needed.

CLUB RACING TECHNICAL BULLETIN

DATE: November 20, 2012
NUMBER: TB 12-12
FROM: Club Racing Board
TO: Competitors, Stewards, and Scrutineers
SUBJECT: Errors and Omissions, Competition Adjustments, Clarifications, and Classifications

All changes are effective 11/30/2012 unless otherwise noted.

GCR

1. #9405 (SCCA Staff) Revisit Turbo Inlet Restrictor Specs
In Appendix F (technical glossary), clarify the Turbo Inlet Restrictor definition as follows:
"A system to limit engine performance that meets these criteria. The inlet restrictor shall have a single, circular opening through which all inlet air passes. The maximum ID of the restrictor is listed on the vehicle's spec line. The restrictor's ~~minimum~~ *maximum* ID must be maintained for a minimum length of 3mm. *That* ~~minimum~~ *maximum ID length shall* be placed within 50mm of the rotating section (impeller assembly) of the pressurizing unit. *If any approved turbo prohibits installing the restrictor in that location, a different location may be specified by the CRB on a case by case basis.* There shall be no other provisions for airflow to the turbocharger other than through this single orifice."

2. #9512 (SCCA Staff) Pending BOD approval Touring Re-org, allow "new T1" cars ST Cages
In GCR section 9.4.E.1, update the roll cage requirements in accordance with the Touring class management:
"Improved Touring, Showroom Stock, Spec Miata, B-Spec AND Touring *(excluding T1)* classes – The roll cage must attach to the vehicle structure within the passenger compartment in a minimum of 6 points and a maximum of 8 points as specified in these rules. Roll cage may not pass through any structural member, except Miata rear main hoop braces may pass through the package tray."

Formula/Sports Racer

SRF

1. #9643 (Erik Skirmants) Brakes and Fuel Pump Clean Up
In Spec Racer Ford 9.1.9.C.24.G change as follows:
Brakes: Hawk Blue 9012 pads P/N 801993 or 801994. Solid Rotor; Minimum ~~Rotor~~ Thickness 10.50mm (0.4130 in.) P/N 800060. Vented rotor minimum thickness 13.25mm (0.522 in.); Must be converted as a set of four in all positions in place of the solid rotor. Vented rotors shall be used as delivered no machining of any kind P/N 800065. Vented rotors will be optional for 2013-2014 seasons, and required for 2015. Rubber caliper bushings may be replaced with bronze bushings P/N 1196185. Original caliper pistons may be replaced with vented caliper piston ~~P/N 1196186~~ P/N 1196184
In Spec Racer Ford add 9.1.9.C.22.gg
P/N 1150002 In Tank Fuel Pump Kit is allowed and recommended with parts as delivered. Installed per SCCA Enterprises "In Tank Fuel Pump Technical Bulletin."

FA

1. #9414 (Jeff Kowalik) Need 34mm SIR for Swift 016
In Formula Atlantic Table 2, change the notes as follows:
"The 2.3 Liter Mazda Duratec engine and ECU is unrestricted with the exceptions that a ~~32mm~~ *33mm* SIR must be used with a sealed air box (part no. FA11016INT) supplied by SCCA Enterprises, the maximum compression ratio is 14.0:1, and the maximum displacement is limited to 2266cc."

FF

1. #7271 (Bob Clark) Allow alternate push rods for the Kent 1600cc engine
In 9.1.1.D.1.i, add the following language:
"*Any pushrod made of a ferrous material may be used, provided that the following minimum dimensions and weight are met:*"

2. #9535 (Lee Niffenegger) Part number correction
In GCR section 9.1.1.D.3.p.5, correct the part number as follows:
"The alternator must be stock Honda Fit PN: 31100-RB0-004 or HPD ~~part #3100-F21S-A200~~ *P/N 31100-F21S-A200 (Supplier PN 20187-A)*. The alternator drive pulley must be stock. Alternator connections must be through the HPD engine electrical harness only. The alternator must not be disabled and must be accessible to SCCA officials."

Grand Touring

None.

Improved Touring

ITS

1. #8471 (Brandon Lewis) Subaru Impreza 2.5RS Engine allowance/adjustment.
Split the Subaru 2.5RS spec lines as follows:

ITS	Engine Type	Bore x Stroke (mm)/ Displ. (cc)	Valves IN & EX (mm)	Comp. Ratio	Wheel-base (inch)	Wheel Dia. max (inch)	Gear Ratios	Brakes Std. (mm)	Weight (lbs.)	Notes:
Subaru Impreza 2.5 RS (99-01)	4 Cyl SOHC	99.5 x 79.0 2457	(I) 36.5 (E) 32.0	10.0	99.2	16	3.55, 2.11, 1.45, 1.09, 0.78	(F) 277x24 vented (R) 266x10 solid	2660	Center differential must remain stock.

ITS	Engine Type	Bore x Stroke (mm)/ Displ. (cc)	Valves IN & EX (mm)	Comp. Ratio	Wheel-base (inch)	Wheel Dia. max (inch)	Gear Ratios	Brakes Std. (mm)	Weight (lbs.)	Notes:
Subaru Impreza 2.5 RS (98)	4 Cyl DOHC	99.5 x 79.0 2457	(I) 36.0 (E) 31.5	9.7	99.2	16	3.55, 2.11, 1.45, 1.09, 0.78	(F) 277x24 vented (R) 266x10 solid	2660	Center differential must remain stock.

ITA
1. #9201 (Dave Parker) Please reclassify 87-89 GTi 16V to ITB
In ITA, Volkswagen Golf GTi 16V (87-89), make the following changes:
Add valve sizes: *32.0 (I) 28.0 (E)*
Brake size: ~~245 (F & R)~~ *239 x 20 Vented disc (F) 226 x 10 solid disc (R)*
Weight: ~~2220~~ *2185*

In ITA, Volkswagen Jetta GLI 16V (87-89), make the following changes:
Add valve sizes: *32.0 (I) 28.0 (E)*
Wheelbase: ~~94.5~~ *97.3*
Gear Ratios: ~~0.89~~ *0.91*
Brake size: ~~245 (F & R)~~ *239 x 20 Vented disc (F) 226 x 10 solid disc (R)*
Weight: ~~2475~~ *2185*

In ITA, Volkswagen Scirocco 16V (86-88), make the following changes:
Add valve sizes: *32.0 (I) 28.0 (E)*
Brake size: ~~(F) 256 Disc (R) 226 Disc~~ *256 x 20 Vented disc (F) 226 x 10 solid disc (R)*
Weight: ~~2320~~ *2185*

ITB
1. #8450 (Eric Pedersen) Reduce Weight of 84-86 BMW 318i
In ITB, BMW 318i (E30)(84-86) and BMW 320i 1.8 (E21) (80-83), make the following changes:
~~2395~~ *2210*
Notes: "*Bosch L-Jetronic Fuel Injection*"

Production
1. #9609 (John VanDenburgh) Please classify 85-87 Audi coupe gt in Production class
In EP, classify the Audi Coupe GT (85-87) as follows: see attachment

EP	Prep. Level	Weight (lbs.)	Engine Type	Bore x Stroke mm.(in.)	Displ. cc./(ci)	Block Mat'l	Head/PN & Mat'l	Valves IN & EX mm/ (in.)	Carb. No. & Type	Wheelbase mm/(in.)	Track (F/R) mm/ (in.)
Audi Coupe GT (85-87)	*2*	*2100 * 2153 ** 2205*	*5 cyl sohc*	*3..19x3.40*	*135.8 c.i.*	*iron*	*Alum*	*(I) 1.50 (E) 1.30*	*Fuel injection*	*99.8*	*59.3/60.1*

EP	Wheels (max)	Trans. Speeds	Brakes Std. (mm/ (in.))	Brakes Alt.: mm/(in.)	Notes:
Audi Coupe GT (85-87	*15x7*	*5*	*(F) 10.1 vented (R) 7.87 drum*		*Comp. Ratio limited to 12.0:1, Valve lift limited to .450".*

EP
1. #9098 (Chris Dryden) Please classify the BMW Z4 in EP.
In EP, classify the BMW Z4 (03-05) as follows: see attachment

EP	Prep. Level	Weight (lbs.)	Engine Type	Bore x Stroke mm.(in.)	Displ. cc./(ci)	Block Mat'l	Head/PN & Mat'l	Valves IN & EX mm/ (in.)	Carb. No. & Type	Wheelbase mm/(in.)	Track (F/R) mm/ (in.)
BMW Z4 (2003-2005)	*2*	*2550 * 2614 ** 2678*	*6 cyl DOHC*	*3.30x2.95*	*152 c.i.*	*Alum*	*Alum*	*(I) 1.23 (E) 1.20*	*Fuel injection throttle body i.d. 2.52*	*98.2*	*62.2/64.3*

EP	Wheels (max)	Trans. Speeds	Brakes Std. (mm/ (in.))	Brakes Alt.: mm/(in.)	Notes:
BMW Z4 (2003-2005)	*18 x 8*	*5*	*(F) 11.23 vented (R) 11.02 solid*		*Comp. Ratio limited to 12.0:1, Valve lift limited to .500", OEM hardtop permitted.*

2. #9709 (Club Racing Board) Modification to GCR 9.4
In GCR section 9.4, clarify as follows:
All cars must utilize a roll cage compliant with the following specifications. These specifications apply to all vehicles registered (issued an SCCA logbook) after 1/1/08. Cars registered before 1/1/08 may continue to compete with their previous roll cage as specified in Appendix I *or comply with the following specifications*. Cars registered as Production class cars prior to 1/1/08 may continue to use their existing roll cage per Appendix J*, or comply with the following specifications*.

FP
1. #9391 (Bill Blust) Allow the use of the Austin Healey Bug Eye body in FP
In FP, Austin-Healey Sprite Mk. II, III, IV MG Midget Mk I, II, III, IV & 1500, classify the Bug Eye body by adding the "*Mk. I*" designation.

2. #9403 (Dieter Griesinger) Weight reduction
In FP, Austin-Healey Sprite Mk. II, III, IV MG Midget Mk I, II, III, IV & 1500 reduce the weight as follows:
1500cc @ ~~1700~~ *1670*

HP
1. #9515 (Bill Blust) Allow body modification for tall drivers in Spridget
In all HP and FP Austin-Healey and MG Midget spec. lines, add the following to the notes:
"*Mk.I Body modification: Behind driver's seat rear deck only, width of shoulder or seat, depth 6" max.*"

Super Touring
STU
1. #9436 (ST Committee) TIR Chart and turbo adjustments
In 9.1.4.2.J.3, add the following statement to the turbo inlet restrictor/weight chart:

"*Turbocharged AWD/RWD cars must deduct 2 mm from this table.*"

Under STU, table A change the following:
Audi A4 turbo (2nd line) Change notes to ~~37mm~~ *35mm* TIR
MazdaSpeed Miata add to notes, *chart -2 TIR*
Mercedes CLK Change notes to ~~37mm~~ *35mm* TIR
Pontiac Solstice, weight *2820*, add to notes, *35mm TIR*

Under STU, table B change the following:
Acura Integra type R, change min weight ~~2675~~ *2475*
Acura RSX type S, remove restrictor
Acura TSX (04-08), change weight to ~~3045~~ *2975*
Acura TSX (09-11), change weight to ~~2940~~ *2870*
Mazda 6, change weight to ~~3045~~ *2975*

ST
1. #9583 (Greg Amy) Change Pre-approved Sources of Engines
In section 9.1.4.G.1, make the following changes:

"Alternate engines may be used, if the manufacturer of the vehicle and engine are the same (i.e., an Acura engine installed into a Honda car) and was available in a car delivered in ~~North America~~ *the United States*."

"Engines from vehicles not available in a car delivered in ~~North America~~ *the United States* will be considered and approved on a case-by-case basis for use in ST."

Rationale: the term "North America" is a holdover from the World Challenge regs, and presents a significant unknown to the STAC/CRB. We have a process in place to approve engines from alternate sources; by changing this verbiage above we do not automatically make non-compliant engines that may already be in use in the class, yet we minimize being blind-sided by something the committees have yet to consider.

Note: If there are cars currently running that this new rule disallows, please submit for approval.

STL
1. #9560 (Greg Amy) E&O, cc/weight verbiage.
9.1.4.3.I.1, change "Minimum weights for cars with piston engines will be determined by 1.3 lbs./cc displacement..." to "Minimum weights for cars with piston engines will be determined by 1.35 lbs./cc displacement..."

American Sedan
None.

Spec Miata
None.

Touring/Showroom Stock
T1
1. #9717 (Club Racing Board) Wing and Splitter
Update the 2013 T1 rules as follows:

B. Aerodynamic Devices

1. Front Splitter
a. A front splitter that is a flat, single-plane may be added. The splitter shall have no vertical deviations. The permitted splitter may close out the underbody from the leading edge of the approved bodywork, back to the centerline of the front axle. The splitter may be mounted to the front fascia via a vertical intermediate mounting surface. If the vertical mounting surface overlaps the front fascia, it may not overlap more than 2.0 inches. Additionally, a maximum of 4 rods, or cables, may be used to support the front, and/or sides, of the splitter. No other material(s) may be used external to the body to support the splitter. A single-plane vertical close-out panel(s) may be used to bridge the gap between the front fascia and the splitter. Splitter designs may incorporate openings for brake ducts provided it does not affect the standard body appearance. SCCA Fastrack News November 2012 Page 26
b. The minimum ride height of front splitters and air dams is 3.0 inches.
c. The front
splitter must not extend more than 2.0 inches past the original or approved
bodywork as viewed from above for the entire profile of the splitter.
d. The splitter shall not extend laterally any further than the widest point of the outside sidewall of the front tires with the wheels pointed straight ahead. The splitter may not extend more than 2.0 inches beyond the bodywork, regardless of where the outside edges of the front tires are.
e. The splitter may have vertical deviations, fences, etc., only if they are part of the production bodywork for street use.
f. Cars with non-OEM front splitter shall increase the required minimum weight by 75 lbs. *or reduce*
their flat plate restrictor by 2 mm. Vehicle that do not have a flat plate restrictor would add one and reduce the OEM throttle body size by 2 mm.

2. Rear Wing
a. The wing shall be mounted to the trunk/deck lid with 2 mounting brackets. Each mounting bracket shall attach to the wing at a point that is at least 2.0 inches inboard of endplates. The wing, and the portion of the mounting brackets located externally to the trunk/deck lid, may only be reinforced by a diagonal strut having no aerodynamic effect, and/or by affixing the external parts of the brackets to internal parts of the brackets within the trunk/cargo area. The internal parts of the brackets may protrude through the trunk/deck lid to allow the two parts of each bracket to be fastened together.
b. Factory wings and spoilers are permitted, but must be removed if an approved wing is installed.
c. Wings shall be a single element with a maximum chord length of 12.00 inches, including any wicker.
d. The entire wing assembly may be no wider than the widest part of the car, not including fender
flares/lips and mirrors, or a maximum width of 72.0 inches, whichever is the lesser.
e. The entire rear wing assembly, including the end plates and any wicker, shall be mounted level
with, or below, the peak of the roof.
f. The trailing edge of the rear wing may be mounted no further rearward than the center of the rearmost
part of the approved bodywork.
g. Wing end plates must not exceed 144.0 square inches.
h. APR performance wing GTC-500 part #AS-1070xx, variable cord length 12.75” Inner/9” Outer), is permitted.
i. Cars with non-OEM rear wing shall increase the required minimum weight by 75 lbs. *or reduce*
their flat plate restrictor by 2 mm. Vehicle that do not have a flat plate restrictor would add one and reduce the OEM throttle body size by 2 mm.

SOLO EVENTS BOARD

SOLO EVENTS BOARD | October 24, 2012

The Solo Events Board met by conference call October 24th. Attending were SEB members Dave Feighner, Bryan Nemy, Steve Hudson, Mike Simanyi, Erik Strelnieks, Richard Holden, and Dave Hardy; Lisa Noble of the BOD; Doug Gill and Brian Harmer of the National Staff. These minutes are presented in topical order rather than the order discussed.

Unless noted otherwise the effective date for all rule, class, and listing change proposals herein is *1/1/2014*

Comments regarding items published herein should be directed via the website www.sebscca.com.

MEMBER ADVISORIES

Tire Rack Solo National Championships

Members interested in serving as a course designer for the 2013 Solo National Championships are invited to submit their qualifications to the SEB via www.sebscca.com.

Safety

#9439 50 Feet Distance Clarification

Per the SEB, the rules (2.2.D and Appendix E.VIII.D.7) do not indicate that 50' is a required kart minimum distance; the wording merely states that the SSS will have the authority to disapprove an event for karts if there are solid objects less than 50' from the course.

Stock

Openings are anticipated on the SAC. Interested members are invited to submit their qualifications in writing via www.sebscca.com.

The SEB thanks Brian Conners, Drew VanderPloeg, and Scott Hoffman for their service to the Club as members of the SAC.

Street Touring

The SEB thanks Andy Hollis, Chris Shenefield, Brian Hanchey, and Jim Reyenga for their service to the Club as members of the STAC.

The SEB has approved the addition of Bill Bounds to the STAC.

Street Modified

Openings are anticipated on the SMAC. Interested members are invited to submit their qualifications in writing via www.sebscca.com.

The SEB thanks Eric Stemler for his service to the Club as a member of the SMAC.

Prepared

The SEB thanks Steve Garnjobst, Tom Holt, and Chris Dorsey for their service to the Club as members of the PAC.

CHANGE PROPOSALS

The following rule change proposals are published here for member review and comment. Input regarding these items should be directed to the SEB via www.sebscca.com.

Stock

#9205 Boss 302 Classing

Per the SAC, the following class listing change proposal is submitted for member comment:

Ford Mustang Boss 302 (non-Laguna Seca) (2012-2013): move from AS to FS

Note: this car was initially classed in the July 2012 Fastrack.

Street Touring

#9305 E85 Usage

Per the STAC, replace the last sentence in 3.6.A with the following:

Fuels comprised of more than 10% Ethanol may only be used when specified by the manufacturer (e.g. in the owner's manual for Flex-Fuel vehicles)

Comment: The use of E85 is becoming more and more widespread within the Street Touring category. In some vehicles it can enable significant power increases, while in others it cannot. Cars have not been classed with this in mind. With inconsistent availability across the nation, it gives significant advantage to those willing to trailer their cars, as opposed to those who choose to daily-drive them. Unlike high octane pump fuels, E85 is relatively easy to police as its use is quite obvious due to smell. Ethanol content in a fuel sample can also be tested easily in the field.

In the Stock category, there is no option to retune a car for the use of E85 so only those designed as Flex-Fuel vehicles can use the fuel anyway. This change will have no effect there.

Prepared

#8672 Bigger Wheels in CP

The PAC is submitting the following rule change proposal for member comment:

Remove subsection 17.4.G.2, which currently reads: "Wheels greater than 16" in diameter will receive a 50 lb penalty."

Reasoning: The weight penalty for wheels over 16" has incrementally decreased over the last decade. The current 50lb penalty is relatively insignificant in view of the current minimum weights. The PAC believes that eliminating the weight penalty for wheels over 16" provides members building newer model cars additional options without modification of original equipment (OE) brake systems. Additionally, the proposal improves the wheel and tire options for all CP competitors.

KM / FJr

#9526 Age Exception for KM

Change 4.1.A to read:

Drivers must possess a currently valid automobile driver's license. Any underage driver who has the legal authority (license or permit)to operate an automobile with restrictions on a public road may compete in a Stock, Street Touring, or Street Prepared class at Regional events, as long as the restrictions of the driving license or permit are met. If those restrictions require a passenger and the Region allows a passenger, that passenger must be either the driver's parent/legal guardian or an approved instructor. That instructor must be approved by both the event chairman and the event Solo® Safety Steward on a case-by-case basis. He/she must have the written permission of the driver's parent/legal guardian (signed at the event) to ride as a passenger and the restrictions imposed by the underage driver's state must allow the instructor to ride as a passenger. *Drivers 15 years and older who are unable obtain a valid automobile driver's license due to age restrictions may be allowed to compete in KM if they possess extensive experience in Formula Junior, and have obtained a competition license from a nationally recognized racing organization such as SCCA or NASA; this will be at the event Chair and Solo Safety Steward's discretion on a case-by-case basis.* Drivers must be SCCA® members.

Comment: Per the KAC, we see an opportunity to safely let those kids who are not yet old enough in some states to compete in open car classes to run in KM. They are less of a danger to other drivers and course workers as well as being familiar with karting procedures from Junior Karting. This allowance could be controlled by a safety or event official to decide if a potential candidate is qualifed in experience from a safety experience. There is precedence for this in the SKUSA rules quoted in the original letter.

<u>NOT RECOMMENDED</u>

Safety

#9171 Seat Belt/Harness Clarification

Thank you for your input. The committee does not believe a change or clarification is needed.

Street Touring

#9332 Airbag Steering Wheel Removal

Per the STAC, competitors are reminded that the NHTSA has a Federally-approved method for electrically disabling

airbags which can be used in the case of unusual seating position and/or body sizing.

#9220 WRX Classing

Per the STAC, this car exceeds the performance levels of the class.

#9281 Crossfire SRT-6 Classing

Per the STAC, this car is outside the performance parameters of existing ST category classes.

#9254 Flywheel Allowance

Per the STAC, this change is not in the spirit of the class allowances.

Street Prepared

#8857 GTR Move to ASP

The SPAC prefers to wait and observe the effects of the recent reorganization. The committee believes this car is reasonably classed where it is.

#8873 Boxster/Cayman Move to BSP

The SPAC believes this car is reasonably positioned in its current class.

#8484 S2000 Move to ASP

The SPAC prefers to wait and observe the effects of the recent reorganization before making significant additional classing changes. At this time it is believed this car is consistent with the intended parameters of its current class.

#9421 CSP Changes

The SPAC does not believe these changes are necessary at this time.

#8880 Cars move to FSP

The SPAC prefers to observe how the recent reorganization affects FSP before making any additional classing changes.

#8549 GTR Move to ASP

The SPAC prefers to wait and observe the effects of the recent reorganization. The committee believes this car is reasonably classed where it is.

Stock

#9271 Coolant Pipe

Per the SAC, all repairs must be authorized by the manufacturer for a given make and model.

#9368 BMW 1M Move to FS

Given the recent classing changes in FS, the SAC would like to observe the competitive balance among the current crop of vehicles prior to adding additional cars to the mix.

#9175 Chrysler Crossfire (non-SRT6) Move to GS

Per the SAC, the Chrysler Crossfire(non-SRT) meets the current competitive balance of DS.

#9381 Bumper Beam Removal Allowance

Removal or modification of the factory bumper beam is not in keeping with the current trailer hitch allowance (13.2.K). The current allowance offers multiple options for legally installing trailer hitches.

Prepared

#8808 DP/EP Proposal

The PAC will continue to monitor the competitive balance between the diverse drivetrains in EP in order to make adjustments and maintain the competitive balance in the class.

#9056 MazdaSpeed Miata in FP

The PAC will continue to monitor the competitve balance in FP, particularly with respect to the diverse drivetrains and powertrains presently populating the class.

General

#8986 Minor Car Driver Proposal

The SEB prefers to err on the side of caution in this situation.

OTHER MEMBER INPUT REVIEWED

Street Touring

#9241 O2 Sensor Clarification

This issue is covered by the Tech Bulletin issued in response to item #7789.

#9264, 9313 E85 Usage

This subject is covered by a change proposal published in response to item #9305.

Prepared

#9369 CP Wheel Sizes

The PAC has forwarded a relevant proposal (#8672) to the SEB with a recommendation for publishing for member comment.

Kart

#9378 KML Weights

This topic will be discussed as part of a larger KM wide weight change proposal.

Safety

#8855, 9072 Roll Bar Comments

Thank you for your input, the previously published rollbar proposal has been withdrawn.

#9199 Seat Belt Installation Comments

Thank you for the information.

Street Touring

#9260, 9270 BRZ/FRS in STX Comments

Thank you for your input.

Street Prepared

#7736 Transmission Comment

A recommendation has been made to the BOD by SEB which concerns this subject.

#8366, 8382, 8360, 8368, 8374, 8388, 8394 RX8 Move to DSP Comments

This subject is covered by an item which has been recommended to the BOD.

#9130 SP Aero Comments

A recommendation has been made to the BOD by SEB on this subject.

#9156 VW A1 Chassis Comments

This subject is covered by a recommendation which the SEB has provided to the BOD.

#8600 SP Re-Org Comment

Thank you for your input.

#9226 Mercedes SLK55 Classing

This subject was addressed by a Tech Bulletin in the October Fastrack.

Stock

#9187, 9188 MINI Move to GS

A related proposal is forthcoming from the SAC.

#9232 RT Proposal

Thank you for your input.

#9257 Stock Classing

These types of issues will be addressed in a forthcoming proposal.

Prepared

#8614 Prepared Comments

Thank you for your input.

#9235 BP Comments

The PAC has withdrawn the proposal to add former BP vehicles to FP. BP remains a supplementary class listed in the rulebook.

TECH BULLETINS

Stock

1. #9321, #9099 Per the SAC, the following new class listings are effective upon publication:

   Ford Focus ST (2013): GS

   Chevrolet Camaro SS (2010-2013): FS

Street Prepared

2. #9158 Per the SPAC, the current DSP listing for the Mini should read as follows:

   MINI

   Cooper S (+ JCW & 2006 JCW GP)

   Note: This Tech Bulletin defines the year of the JCW GP that is currently classed in Street Prepared. The SPAC will review the 2013 JCW GP once it has been released.

3. #9273 Per the SPAC, clarify the ESP listing of the Lexus 400 as follows:

   Lexus

   GS/LS/SC 400

Street Touring

4. #7789 Per the STAC, 14.10.D should read:

   D. Exhaust manifolds, headers *and* downpipes may be replaced with alternate units. *Relocation of the oxygen sensor on the header is permitted. Exhaust heat shields which cover only (and attach solely to) these parts may also be replaced, removed or modified.*

   Note: This cleans up language that has been clarified several times, and adds back the correct sections inadvertently dropped as part of the category re-write for 2012. It also is now consistent with 14.10.F regarding the use of “OE sensors only” for engine management.

5. #9100 Per the STAC, the following new listings are added in class STF:

   Honda Accord 4-cyl (1998-2002)

   Honda Accord 4-cyl (2003-2007)

   Honda Accord 4-cyl (2008-2012)

   Note: 6-cylinder models are outside the parameters of STF

6. #9213 Per the STAC, the following new listing is added in class STF

   Chevrolet Volt (2011-2013)

7. #9016 Per the STAC, clarify the STC listings for Neon to read:

   Neon (1995-2000) (all)

   Neon (2001-2004) (ACR & R/T)

   Also add to STF:

2001-2004 Neon (NOC)

Note: this puts the slower models of the 2nd generation Neon in STF. While the generation split is at year 2000, the ACR transmission was available in some lesser trims initially in 2000.

8. #9461 Per the STAC, correct the STC listing for Mazda 323 to include the base model, as follows

Mazda 323, 323 GT, 323 GTX

RALLYCROSS BOARD

RALLYCROSS BOARD MINUTES | November 7, 2012

The RallyCross Board (RXB) met via conference call on November 7. Attending were Brent Blakely, Karl Sealander, Warren Elliott, Stephen Hyatt and Ron Foley. Also in attendance were Stephen Harris and Todd Butler, BoD liaisons, and Howard Duncan and Brian Harmer from the National office.

The Secretary acknowledges that these minutes may not be in chronological order.

Committee Reports

- RallyCross Safety Committee: The Safety Steward Training presentation, forwarded to Risk Management for review, is ready to be implemented. It will be available for download at the SCCA website.

  Motion: Accept the Safety Steward Training presentation as prepared and make it available for use to the members. Hyatt/Blakely. Not present: Cashion and Ricker. **PASSED unanimously**.

  Sealander reported no communication with the Colorado program on the Safety Steward training session and is assuming a training session has not yet been conducted. He suggested that Safety Committee Chairman, Bob Ricker, review the situation with the Divisional RallyCross Steward (DRXS), Aaron Miller, and consider his qualifications based on his work assignment as Assistant Chief of Course at the National Championship where he showed a good working knowledge and understanding of safety and course conditions. Hyatt suggested that in addition a review of the Safety Steward Training presentation by Aaron Miller be the final step to his licensing as a Safety Steward.

- RallyCross Rules Committee (Warren Elliott): Brian Harmer will post a tech bulletin at the website clarifying current RallyCross Rules (RXR) language concerning Stock Category tire size allowances. It will be the same as the clarification posting on the forums. He will also make the forum post a sticky.

  The 2013 RXR will include improved language explicitly stating that in the Prepared Category functional catalytic converter(s) are required on vehicles equipped with catalytic converter(s) as original equipment.

- National Championship Committee (Brent Blakely): Blakely reported that RXB member, Karl Sealander, has agreed to be on the committee and that he is continuing to search for additional Committee members from the membership, preferably those who have regularly attended the National Championship events.

  Blakely requested any feedback from the National Championship event in October. Howard Duncan reported that the site owners seem to be pleased with the post-event cleanup. Hyatt reported that the Divisional RallyCross Stewards suggested that language be added to the Supplemental Regulations indicating that each driver will be informed of any course changes, that Safety Stewards use a car to pre-run the course looking for safety concerns, and that runs begin on Friday to accommodate more participants and runs. Elliott reported some unhappiness among participants regarding dropped runs and suggested that the RXB readdress the debead issue.

- Marketing Committee (Ron Foley): Foley stressed, from a marketing perspective, the need for early scheduling for 2013 National Challenges, along with a more standard format between all the events so that each event feels important to the participants. Brian Harmer suggested the event trophies be standardized through the National office.

- Divisional Steward Liaison (Stephen Hyatt): Hyatt reported that the last DRXS call included 6 of the Stewards. Charles Wright took over as the new chairman. One of the major discussion points was the proper handling of tire debeading at National events. Hyatt reported that thus far 3 Divisions have scheduled 2013 National Challenges. The goal for the other Divisions is to schedule their National Challenges by January 15, 2013. The next two DRXS meetings will be interrupted by the Holidays and will need to be rescheduled if possible.

- Forum Activity: The RXB continues to monitor the forums for topics that may be important to the membership.

Old Business

- Alternative processes for Safety Steward licensing in case of conflict: Hyatt presented the following additional wording for the 2013 RXR, RallyCross Safety Steward Training Program, Training Methodology (Page 47):

  4) If a Divisional Steward denies the application for a Safety Steward after the above steps have been followed and there is a request for a review of the application, a Review Committee of three members will be convened. The Review Committee will consist of: a RallyCross Divisional Steward, an RXB member, and a member of the RXB Safety

Committee; all must be currently licensed RallyCross Safety Stewards. The committee will review the application and submitted qualifications. They may ask for additional information from the applicant and/or the Divisional Steward who denied the application. The Review Committee will either approve the application or deny it. If denied, the committee will provide recommendations as to what is required to have the application approved.

Motion: Add the wording as presented above to the 2013 RXR. Foley/Elliott. Not present: Cashion and Ricker. **PASSED unanimously**.

- Post-National Championship survey to all competitors: This has not yet happened and is now probably too late for the 2012 event. Foley suggested that a survey be include in the competitor's packet at next year's event.

- Find TripleCross Award compensation: The RXB discussed a few ideas for the award. Winners for 2012 have yet to be determined, which has been delayed because of the lack of results from several of the 2012 National Challenge events. Hyatt will emphasize the need for the Divisions to post results.

- Request suggestions from DRXS for effective uses of budget: Howard Duncan reported that $300 has been budgeted for each DRXS to use as he sees fit for his Division's RallyCross programs.

New Business

- After the required membership input, the Rules Committee presented the following rules proposals to the RXB. RXB voting results are included with approved proposals being referred to the BOD for final approval before adding to the 2013 RXR:

  - 6.2.C.2 Tires must be DOT approved. Tires marked "For competition only", "Not for street use" or similar, are not allowed. No part of the tire may be modified or altered from its original form, either through addition or subtraction, other than normal wear. No studded tires are permitted unless ice or snow is present. Studded tires may not be homemade using bolts or screws. Only street-legal studs are allowed. Tires may not interfere with any parts of the car (fenders, fender liners, suspension, etc). Tires must not be on the Tire Exclusion list.

    NOT APPROVED unanimously. Not present: Cashion and Ricker.

  - 6.2.D.8 ~~Any dampers may be used but the damper must mount to the original mounting position using unmodified mounting points. Springs may also be replaced, but they must be of the same type and use original mounting points. Threaded collars and camber plates are allowed.~~ Any dampers may be used. Damper attachment points on the body/frame/subframe/chassis/suspension member may not be altered. This installation may incorporate an alternate upper spring perch/seat and/or mounting block (bearing mount). No damper may be capable of adjustment while the car is in motion, unless fitted as original equipment. MacPherson strut equipped cars may substitute struts, and/or may use any insert. This does not allow unauthorized changes in suspension geometry or changes in attachment points (e.g., affecting the position of the lower ball joint or spindle).

    6.2.D.8.a Camber kits, also known as camber compensators, may be installed. These kits consist of either adjustable length arms or arm mounts (including ball joints) that provide a lateral adjustment to the effective length of a control arm. Alignment outside the factory specifications is allowed. The following restrictions apply:

    1. On double/unequal arm (e.g. wishbone, multi-link) suspensions, only the upper arms OR lower arms may be modified or replaced, but not both. Non-integral longitudinal arms that primarily control fore/aft wheel movement (e.g. trailing arm(s) or link(s) of a multilink suspension) may not be replaced, changed, or modified.
    2. On arm-and-strut (MacPherson) suspensions, Adjustable camber plates may be installed at the top of the strut and the original upper mounting holes may be slotted. The drilling of holes in order to perform the installation is permitted. The center clearance hole may not be modified. Any type of bearing or bushing may be used in the adjustable camber plate attachment to the strut. The installation may incorporate an alternate upper spring perch/seat and/or mounting block (bearing mount).
    3. On swing or trailing arm suspensions, the main arms may not be modified or replaced, but lateral locating links/arms may be modified or replaced.
    4. The replacement arms or mounts must attach to the original standard mounting points. All bushings may not be moved or relocated on the arm, except as incidental to the camber adjustment. The knuckle/bearing housing/spindle assembly cannot be modified or replaced.

    6.2.D.8.b Springs may be replaced, but they must be of the same type and use original mounting points.

    APPROVED unanimously. Not present: Cashion and Ricker.

  - 6.2.D.10 ~~Any tire is allowed except homebuilt studded tires~~. Tires may have altered tread blocks/patterns but

cannot be marked for temporary use. Studded tires may not be homemade using bolts or screws. They must have a minimum treadwear rating of 0 (zero). They must not be on the Tire Exclusion list.

6.3.E.10 Any tire is allowed that is not on the Tire Exclusion list.

6.3.F. Wheels must be safely affixed. They shall not be reversed so that the lughole taper does not mate with the chamfer of the lugs. All studs and lug nuts must be present, installed correctly and functional. A space-saving wheel designated by a manufacturer for temporary low speed use may not be used.

6.3.G. Tires must be in good condition, with no cord or belts showing or cracks in the tread or sidewall. ~~A space-saving wheel designated by a manufacturer for temporary low speed use and for transiting a short distance may not be used for competition regardless of the type of tire installed. Tires offered for two, three or four wheeled motorbikes are not allowed. This includes motocross, dual-sport and ATV tires that are not designed to withstand cornering side-loads that can be generated by an automobile of substantially higher curb weight.~~

NOT APPROVED unanimously. Not present: Cashion and Ricker.

- Replace all of 6.2.C.13 with the following: Original equipment shocks and struts may be replaced with optional OEM or Aftermarket variants. The shock internals may not be modified (no revalving). The extended and collapsed length dimension, less a bump stop if applicable, must be within .5 inches (12.7mm) of the standard OEM unit. The OEM coil spring must be positioned on the damper in its original location. The spring perch must be located within 1/8 inch (3.17mm) as compared to the OEM perch unless originally equipped with adjustability from the manufacturer. Mounting bushings that are integral to a shock absorber must be of the same type material and design as original. Externally adjustable damping functions, whether electronically or mechanically actuated, are only permitted if the vehicle was originally equipped with this capability. The number of adjustment settings must be the same or fewer as the OEM. Unless originally equipped, no damper may have external nitrogen fill valves of any kind or external reservoirs.

  NOT APPROVED unanimously. Not present: Cashion and Ricker.

- 6.2.C.5 Dress-up and convenience items, which do not give a performance advantage, reduce the weight of the car, or weigh less than the replaced standard part they are replacing, are allowed (i.e. shift knobs, pedal covers). Exterior plastic trim pieces that serve no other purpose may be removed.

  NOT APPROVED unanimously. Not present: Cashion and Ricker.

- 6.2.C.18 Audio system components may be replaced with alternate components intended for the application (i.e. factory head unit may be replaced with aftermarket single-din head unit).

  APPROVED unanimously. Not present: Cashion and Ricker.

- 6.2.D.22 Oil cooling radiators for engine, transmission, or differentials; may be added, modified, or replaced with alternate parts providing they and their installation serve no other purpose, and subject to the following restrictions:

  a. Fluid capacity and dry weight of any radiator being modified or replaced must be no less than that of the OEM standard part.
  b. Radiator(s) and their lines must be securely mounted, reside in the engine bay area, or the general location of the OEM part being replaced or modified. No lines may be routed through the passenger compartment.
  c. No body parts or structure may be altered in any way, except for the minimum holes to facilitate mounting brackets and fluid lines, for installation.

  APPROVED unanimously. Not present: Cashion and Ricker.

- 6.2.D.10 ~~Any tire is allowed except homebuilt studded tires~~. Tires may have altered tread blocks/patterns but cannot be homebuilt studded tires or marked for temporary use and must meet one of the following requirements:
  a.) have a minimum treadwear of 0 (zero).
  b.) be any automotive rally tire from such tire manufactures as but not limited to: BF Goodrich, Dmack, Falken, Kumho, Hankook, Lassa, Michelin, Silverstone, or Yokohama.
  c.) be approved by the RXB.

  NOT APPROVED unanimously. Not present: Cashion and Ricker.

- 6.2.E.10. Any tire is allowed.

  NOT APPROVED unanimously. Not present: Cashion and Ricker.

- Ritchie Bros. auction sites: Tabled.
- National Convention sessions and meeting times: Tabled. Howard Duncan will send a rough draft of the schedule for better planning at the December meeting.

Next meeting: December 5, 2012

Submitted by Karl Sealander, RXB Secretary

ROAD RALLY BOARD

ROAD RALLY TOWN HALL MINUTES | October 20, 2012

A *RoadRally* Town Hall meeting was held after dinner on Saturday, October 20, 2012 at the USRRC.

Attending were: Chairman, Rich Bireta; members: Jeanne English, Chuck Hanson, Sasha Lanz, Clarence Westberg; and Deena Rowland from the National Office.

Chairman Bireta called the meeting to order at 8:30 pm EST.

Proceedings

1. from Cheryl Babbe: the SCCA Hall of Fame needs more RoadRally people; Gene Henderson is already in the Hall, but he is primarily Performance Rally; submit nominations, along with a page or two indicating why the person should be considered, to SCCAHoF@scca.com.

2. Rich thanked the Detroit Region USRRC organizing committee and their RE Jennifer Glass for providing her horse barn for dinner and then told attendees about what is currently going on with the RRB:

a. RRB openings: please submit resume(s) by October 31.
b. 2013 USRRC: please submit proposals; we would like to announce the location at the SCCA Convention.
c. 2013 RRR changes: the only proposal is to change the Experience-Based Classes
d. The **RRB** has created a calendar for getting things done.
e. The National Events Committee: composed of Clarence Westburg, Mike Thompson, Bob DeMeritt, and Dave Weiman; they will be handling things related to Nationals, which frees up the RRB to concentrate on the regional program, to grow it from the ground up; Clarence will be putting National dates on the SCCA RoadRally Facebook page.

3. Rich opened up the floor for questions: What is being done to grow the sport? Answer:

a. there have been many suggestions, which have been consolidated into a list that the RRB, National Events Committee, and Regional Events Committee are/will be working from
b. make rallies easier, more fun, more visible, and make it happen
c. we have a Mentoring Committee to help anyone wanting to put on a rally/start a rally program
d. the App Class has been specifically developed for Smartphone users, which we hope will appeal to the young crowd
e. Rich compiled a participation study to identify regions that do rallies, how many they do, and reasons why some regions have no rallies and/or declining participation (e.g. their only rally master moves away, organizers take a year off); we need to find a "spark plug" for the regions.
f. Cheryl reminded attendees to use the SCCA tools, to send rally info to all who check 'rally' as their area of interest, and to broadcast events via social media.
g. go to marque club email boards, e.g. Subaru, Porsche, Mustang – the list is endless.

Town Hall stopped for presentation of rally awards.

Submitted by Jeanne English, RRB Secretary.

ROAD RALLY BOARD

ROAD RALLY BOARD MINUTES | November 5, 2012

The RoadRally Board met via conference call on November 5, 2012; called to order at 7:33 pm CDT.

In attendance: Chairman Rich Bireta, Jeanne English, Chuck Hanson, Sasha Lanz, Clarence Westberg, Deena Rowland and Howard Duncan from the National Office, BOD liaisons Steve Harris and Bob Lybarger; not in attendance: RRB member Jim Wakemen

October minutes approved with corrections to National Committee report 2013 National rallies: Hurdle date tentative, Pittsburgh date Aug 24-25 (Chuck/Sasha/passed).

Old Business:

1) USRRC.
   a. 2013: Final action on Arizona Border Region bid: Chuck noted that they seem to have no support from their region; we still have concerns about administrative issues; **Motion:** to deny the AZ Border bid for the 2013 USRRC: Sasha/Jeanne/passed. We are still looking for a host for 2013.
   b. 2012: Event Post-Mortem: we all agreed that overall the weekend went well and was enjoyable; several

comments that some of the rallies were too long, perhaps the Sunday rally in particular should be shorter to folks can have a better chance of getting home earlier; the course rally was a good example of a rally designed for the average rallyist (e.g., fixed main road); GTA was fun with its football theme; these were Deena's first road rallies ever and her impressions were – she had no clue what she was getting into, she was in over her head but still have fun, and she thinks that everyone in the SCCA office needs to go on a rally to see what they are about; in summary – good rally weekend, but the USRRC is not easy for someone who has never rallied before, regional experience first is needed.

c. 2012: Town Hall review: got started late, after many people had already left; Rich did an introduction, and then asked for questions; question "What's being done to grow the sport?" generated lots of discussion; minutes of Town Hall meeting are posted separately.

2) 2013 Rules Change: Experience-Based Classes
   a. We received draft language from Dave Teter, in conjunction with Bruce Gezon, putting the proposal in appropriate format for inserting in RRRs.
   b. Logistics for updating 2013 RRRs: the proposal was posted at the beginning of the year, we received comments, Chuck organized the comments and adjusted proposal wording, final version was sent to Rules Committee, we now have version from Dave Teter; Chuck said that the Teter version does not change the intent of the final proposal and should be referred to the BOD for approval at their December meeting; **Motion:** send to the BOD for their approval: for 2013 RRRs, change Article 8.B.3 and Appendix T per the document received from Dave Teter: Chuck/Sasha/passed with one abstention.
   c. RRR appendices need to be updated; Jeanne will contact Dave Kolb to get this done.
3) Road Rally Events Calendar: was discussed and approved last month to be posted, but when Deena tried to post (Jeanne's) calendar she was unable to do so; discussion with Howard about this, with primary issue being how much information is on this calendar, in particular whether actual start locations are given (they are not, only city is given), Howard was worried that if an event was changed or canceled people might show up anyway; calendar OK as is, Howard will work with Rich to get it posted; it is good to have a single source to look for rally info. Different issue on SCCA website, links specific to some rally events somehow gets changed to region website link; Deena will look into this.
4) Committee Reports
   1) National Events Committee – Clarence:
      a. This committee has put a proposal in our Dropbox listing what they think needs to be done; the NEC has been doing work via email, they would like to have a face to face meeting to get things moving for the 2014 RRRs.

Break 8:30, reconvened 8:40

b. RRB should read the proposal and comment; Sasha asked about GTAs being disenfranchised, Clarence answered that GTAs not meant to be disenfranchised, but that the GTA committee needs to come up with their own program.

c. calendar requests go to Deena first, then the NEC will approve sanctions and assign liaisons; liaisons can be any RRB or Rules member, or member of the NEC.

   2) Publicity Committee – Sasha: Dave Head has agreed to be on the committee, as well as Bruce Gezon
   3) Regional Committee – Rich: nothing to report

New Business:
1) Regional and Divisional Awards for 2012: start thinking about them, vote will be at a future meeting
2) 2013 RRB member recommendations to BOD:
   a. All RRB members at this meeting are willing to serve another year.
   b. We have received two applications from potential new RRB members; **Motion**: approve these two people (passed); Howard will take both names to the BOD for approval.
3) Proposal from Dave Head regarding clocks and timing: postpone to next month (we are out of time)
4) USRRC Future Format: Clarence put a proposal in the Dropbox: what should the USRRC be? Do we need to change the concept? Should it be a destination event?

Conference call ended at 9:30 CDT while we were still talking (oops). USRRC Future Format will be first item next month; Sasha and Howard both had email comments after the meeting about the USRRC.

Next meeting Tuesday, December 4, 2012

Respectfully submitted,

Jeanne English, RRB Secretary

QUICK LINKS

The following items have been removed from regular inclusion in Fastrack News and can be found on SCCA's Web site at the following links:

CLUB RACING

Runoffs Event page: http://www.scca.com/runoffs
Accredited Driver Licensing Schools: http://www.scca.com/clubracing/content.cfm?cid=50864
Forms: http://www.scca.com/downloads/#club
Technical Forms: http://www.scca.com/clubracing/content.cfm?cid=44472
General Competition Rules (GCR): http://www.scca.com/clubracing/content.cfm?cid=44472

SOLO

40th Tire Rack SCCA Solo National Championships: http://www.scca.com/solonationals
Forms: http://www.scca.com/downloads/#solo
Rulebook: http://www.scca.com/downloads/#solo

RALLY

Forms: http://www.scca.com/downloads/
Rulebooks: http://www.scca.com/downloads/

SCCA NATIONAL CONVENTION

Event page: http://www.scca.com/events/index.cfm?eid=4495

EVENT CALENDAR: http://www.scca.com/events/