Fastrack news official SCCA member notification

EFFECTIVE FIRST DAY OF THE COVER MONTH UNLESS OTHERWISE NOTED January 2008

BOARD OF DIRECTORS MINUTES

BOARD OF DIRECTORS' MINUTES | SPORTS CAR CLUB OF AMERICA, INC. | *Nov. 30, 2007*

The Board of Directors, Sports Car Club of America, Inc. met in Topeka, Kansas, November 30, 2007. The following members participated: Bob Introne Chairman, Howard Allen, Jim Christian, Charlie Clark, Larry Dent, Kaye Fairer, R. J. Gordy, Brian Holtz, Bob Lybarger, Andy Porterfield, John Sheridan, Mike Sauce and K.P. Jones, Jim Julow, President, and Jeff Dahnert, Vice President of Finance, Lisa Noble, Director elect, Phil Creighton, Director elect, Jerry Wannarka, Director elect, Eric Prill, Vice President Communications/Marketing, Peter Lyon, Risk Management, Colan Arnold, Vice President Member and Region Services, Howard Duncan, Vice President Rally/Solo, Terry Ozment, Vice President of Club Racing, Ken Patterson, Chairman of the Stewards, Jeremy Thoennes, Technical Services Manager, Bob Dowie, Club Racing Board Chairman, also participated.

The Secretary acknowledges that these minutes are not in chronological order.

MOTION: To approve the minutes of the November 5, 2007 meeting. (Sheridan/Lybarger) PASSED, Unanimous

CONTENTS

BOARD OF DIRECTORS	**1**
Board of Directors Minutes - 11/30	1
Board of Directors Minutes - 12/1	9
Board of Directors Minutes - 12/10	11
CLUB RACING	**14**
CRB Minutes	14
Technical Bulletin	19
COURT OF APPEALS	**29**
SOLO	**31**
SEB Minutes	31
RALLY	**33**
RoadRally Minutes	33
RallyCross Minutes	33
QUICK LINKS	**35**

PRESIDENTS REPORT – Jim Julow

Jim presented updates to the strategic plan, and the supporting tactical activities. He reported that the national office has been operating below budget. He also reviewed sponsorship initiatives.

MARKETING – Eric Prill

Eric reviewed the print, tv/radio and web based media coverage SCCA received in 2007, He presented an overview of marketing activities relating to the website, trade shows, brochures, media guides, recruitment and sponsor partners. He presented 2008 marketing plans.

RISK MANAGEMENT – Peter Lyon

Peter presented the 2008 Event Insurance Rate Plan.

FINANCIALS – Jeff Dahnert

Jeff presented financial data for year to date as of October 2007 He projected that SCCA Inc. will finish the year in the black. He presented a proposed budget for 2008.

MEMBERSHIP AND REGION SERVICES - Colan Arnold

Colan reviewed the First Gear, Club Racing Volunteer, New Member Referral, and weekend membership initiatives. He also covered membership statistics and dynamics. He reported on the Runoffs registration system and presented plans for enhancements to the Timing and Scoring systems for 2008. He gave an update on current and future convention plans.

RALLY/SOLO – Howard Duncan

Howard reported on Rallycross activities and the growth of the Road Rally program. He presented plans for the 2008 Solo National Championships, and ProSolo. Howard presented the inductees to the SCCA Hall of Fame for 2008.

The Board discussed issues with the Weekend Membership program.

ROAD RALLY/RALLYCROSS – Pego Mack

RoadRally has sanctioned 199 events, up 10% from last year. The number of events has increased as has the average number of cars. GTA events are on the rise as they are being used as a means to enable regions to start up a Rally program. They are growing

in number as many Regions have recognized their worth in growing a Regional RoadRally program. We expected an increase in the number of GTA events with the advent of a National GTA Championship and that has proven to be true.

This was the first year using the new points system for RoadRally and the response from the regions has been tremendous. There have been more events and far more competition to win regional and national championships than in previous years. People who have never won a National Championship in RoadRally have won titles this year that they never had to opportunity to win in the past. All together the new structure has increased the number of events and the number of competitors. There have been over 1734 cars entered in this year's events and that is at least 3468 competitors, with the final count not in yet.

The first RallyCross National Divisional Series brought events to 9 regions and our first new National Championship event in the past 30 years at MPH, Hastings, NE., brought fifty competitors to the first RallyCross National Championship. Plans for 2008 include a new site for the RallyCross National Championship and a new set of National events to lead up to that event. Drivers from all over the country competed during the course of 2007, crossing Regional and Divisional lines to attend competitions. The Championship brought entries from New England Region, Oregon Region, Cal Club and Tennessee Valley.

RallyCross continues to grow across the country. There have been 131 events held this year, including 9 RallyCross National Divisional events. While the number of events is about 5% lower than last year 20 events were canceled due to weather conditions. The number of competitors per event has remained the same at an average of 27 per event.
The RallyCross Board was put in place at the beginning of 2006 and has done a tremendous job in creating its rule set, practice and procedures and safety plans. They have adopted a Lightening Safety Plan that could be the standard for all events. They continue to work towards keeping a growing sport up to date and well within safety specifications.

CLUB RACING – Terry Ozment

Terry reviewed the 2007 Runoffs, and highlighted many improvements to the event since 2006. She presented the results of the 2007 driver surveys. She also identified many areas for potential improvements for 2008.

The Board discussed a wide variety issues and opportunities concerning the 2008 Runoffs.

TECHNICAL SERVICES – Jeremy Thoennes

Jeremy presented a revised Spec Miata Compliance program.

STEWARDS – Ken Patterson

Ken presented an overview of 2007 activities. He reported on plans for steward licenses, and the track review program.

SCCA FOUNDATION – Larry Dent

The Street Survival program continues to be the major focus of the Foundation at this time.

The pilot programs, eight I believe were run, have done what we expected, and that was to iron out all the rough spots in adapting the BMW-CCA program to the needs of the SCCA's local regions.

We have learned a lot and are on track for a national rollout at convention.

I truly expect that this program will be huge and that every SCCA region will want to get involved.

The program will benefit young drivers, its primary purpose, but will also serve other things that will be of benefit to the regions. They will build community awareness of the SCCA, they should make site acquisition for solo's easier to obtain, they should show a surplus of funds for the region and the foundation, and the program's will certainly build a sense of togetherness in the regions between the solo community and the road race community.

All in all a win/win program.

OLD BUSINESS

MOTION: To approve the revised Spec Miata compliance program as presented by technical services. (Jones/Fairer) PASSED Voting NO, Porterfield, Sheridan, Dent, Sauce, Holtz, Christian

NEW BUSINESS

MOTION: To make the following changes to the RoadRally Rules and Regulations. (Dent/Allen) PASSED Unanimous

Insert new Section 4 on Page 6 after Article 4, Paragraph B, Section 3. Renumber current Sections 4&5 as Sections 5&6.

Article 4 SCCA-Sanction

B) Duration

4) For SCCA RoadRally Championship Series points reporting only, Regional events shall combine classes until there a minimum of two cars per class. The Regional event's general instructions shall specify a reasonable method for combining classes, if needed.

MOTION: To authorize per Diem for the three outgoing directors for their attendance at the National Convention. (Sheridan/ Sauce) PASSED Abstaining, Holtz

MOTION: To approve the 2008 Event Insurance Plan and to drop the excess liability policy as recommended by Risk Management. (Jones/Lybarger) PASSED, Voting NO, Holtz

MOTION: To request that the Club Racing Board develop contingency plans for those classes that had 2007 participation levels from 20th to 24th, should they not happen to meet the criteria for an invitation to the 2009 Runoffs. (Christian/Fairer) PASSED Unanimous

MOTION: That SCCA Inc. forgives $8,325 of the remaining debt owed by the SCCA Foundation. (Allen/Fairer) PASSED Unanimous

MOTION: That the Club Racing Board not be limited in their consolidation efforts to only those classes with issues for Runoffs eligibility. (Sheridan/Sauce) PASSED Voting NO, Porterfield

MOTION: To approve the SCCA Inc. Strategic Plan (November 30, 2007) as presented by Jim Julow. (Dent/Sheridan) PASSED Unanimous

MOTION: To approve the 2008 Budget as presented, reflecting competition license fees of $85 for a National license, $65 for a Vintage license, and $40 for a Time Trials license. (Jones/Sheridan) PASSED Unanimous

MOTION: To approve the following changes to the GCR as recommended by the Club Racing Board.
GCR Item 1 (Sauce/Lybarger) PASSED Unanimous
GCR Item 2 (Fairer/Lybarger) PASSED Voting NO, Sauce
GCR Item 3 (Sauce/Dent) PASSED Voting NO, Holtz, Introne
GCR Item 4 (Jones/Fairer) PASSED Voting NO, Porterfield, Dent, Sauce, Holtz, Christian, Sheridan
Formula Item 1 (Porterfield/Sauce) PASSED Abstaining, Christian
Formula Item 2 (Porterfield/Sauce) PASSED Abstaining, Christian
American Sedan Item 1 (Lybarger/Sauce) PASSED Unanimous
American Sedan Item 1 (Sauce/Lybarger) PASSED Unanimous
Showroom Stock Item 1 (Dent/Lybarger) PASSED Unanimous
Showroom Stock Item 2 (Sauce/Allen) PASSED Unanimous
Touring Item 1 (Sauce/Allen) PASSED Unanimous

GCR

Item 1. Effective 1/1/08: Change section 8.1.4 to read as follows:
To obtain a determination on the legality of a vehicle or component, without filing a formal protest, a competitor may request such a ruling from the Club Racing Office. The Chairman of the Stewards Program will then convene a first court. *The protest and appeal procedures described in sections 8.3 and 8.4 apply except that* ~~Their decision would then be reviewed by the Court of Appeals. The fee for this service is $250. A portion of this fee may be refundable at the discretion of either or both courts. P~~ *p*enalties or penalty points will not be assessed in the event of a negative ruling. *Also, a* non-compliant ruling will be published; a compliant ruling will not be published. *The fee for this service is $125 for the first court and $175 for the Appeals Court.*

Item 2. Effective 1/1/08, change the third and fourth sentences of section 8.4.3 to read as follows:
The Notice of Appeal shall be U.S. Government postmarked or registered with a carrier service (i.e., UPS, Federal Express, etc.) within ten (10) days after the announcement of the decision being appealed has been given to the appellant and shall include the appropriate appeal fee of $*175* ~~125~~, payable to SCCA, Inc. A minimum of $*100* ~~50~~ of the appeal fee will be retained by the SCCA on all appeals that are filed, unless otherwise determined by the Court of Appeals.

Item 3. Effective 1/1/08: Change section 9.3.19.A as follows:
Driving suits that effectively cover the body from the neck to the ankles and wrists, manufactured of fire resistant material, worn with underwear of a fire resistant material. One piece suits are highly recommended. All suits and underwear shall be made of the following accepted fire resistant materials: Nomex, Kynol, FPT, IWS (wool), Fiberglass, Firewear™, Durette, Fypro, PBI, Kevlar, NASAFIL, or any suit carrying an SFI 3-2A/1 or higher certification patch. Underwear of PROBAN is approved. The following specific manufacturer(s) material combinations are also recognized: Simpson Heat Shield, Leston Super Protex, FPT Linea Sport, Carbon X, and Durette X-400. Underwear is not required with three-layer suits or with suits carrying FIA standards of 8856-1986 or 8856-2000 or SFI 3-2A/5 or higher (e.g., /10, /15, /20) Certification Patch. FIA homologated driving suits and underwear are recommended.

Effective 1/1/09: change section 9.3.19.A as follows:

Driving suits that effectively cover the body from the neck to the ankles and wrists~~, manufactured of fire resistant material, worn with underwear of a fire resistant material~~. One piece suits are highly recommended. All suits *shall bear an SFI 3.2A/1 or higher certification label or FIA 8856-2000 homologation.* ~~and underwear shall be made of the following accepted fire resistant materials: Nomex, Kynol, FPT, IWS (wool), Fiberglass, Firewear™, Durette, Fypro, PBI, Kevlar, NASAFIL, or any suit carrying an SFI 3-2A/1 or higher certification patch. Underwear of PROBAN is approved. The following specific manufacturer(s) material combinations are also recognized: Simpson Heat Shield, Leston Super Protex, FPT Linea Sport, Carbon X, and Durette X 400.~~ *Underwear of fire resistant material shall be used except* ~~Underwear is not required~~ with ~~three layer suits or with~~ suits carrying FIA standard~~s of 8856-1986 or~~ 8856-2000 or SFI 3-2A/5 or higher (e.g., /10, /15, /20) Certification Patch. ~~FIA homologated driving suits and underwear are recommended.~~

Item 4. Effective 1/1/08: Change section 3.3.5.E as follows:
A $10 surcharge for each Spec Racer, Formula SCCA, and *Spec Miata* car must be submitted to the SCCA National Office with the tow fund and excess sanction fees for the event.

Formula FE

Item 1. Effective 1/1/08, Change section 9.1.1.A.5.13.a., b., and c. as follows:

~~a. A competitor shall start the race on the same set of tires (meaning the original four) as used in a qualifying session for the race. The only exception is rain tires. It is the responsibility of the competitor to ensure their tires are marked appropriately for qualifying and race sessions. It is recommended that regions offer these services at a central location such as pre-grid or Tech.~~

~~b. A change of tires during or between a qualifying and race session shall automatically result in all previous times being disallowed.~~

~~c. If a tire is damaged during a qualifying session the competitor may replace that tire with a used tire upon approval of the Chief Steward. Should a tire be replaced for any reason, the competitor shall forfeit his grid position and start at the back of the grid.~~

a. A competitor shall start the race on tires used in a qualifying session for the race as identified by markings made on the tires by a race official. It is the responsibility of the competitor to ensure that his or her tires are appropriately marked prior to (e.g. on the false grid), during, or immediately after (e.g. as the car leaves the track) a qualifying session.

b. For races with more than one qualifying session, a competitor shall start the race on any marked tires from any qualifying session for the race.

c. If a competitor chooses to start the race on any tires that were not used in a qualifying session for the race and not appropriately marked, the competitor shall forfeit his or her grid position and start from the back of the grid. This forfeiture of grid position shall not apply if all qualifying sessions for the race were run under rain or wet conditions.

d. A complete set of four (4) rain or wet track tires may be used at the competitor's discretion for any race. Rain tires may be in new or used condition and require no special marking if used as a complete set of four.

Item 2. Effective 1/1/08, Add new section 8. to 9.4.5.G to read as follows:

8. Formula SCCA cars shall not be required to use a crush box until March 1st, 2008.

Effective 3/1/08, add a new section f. to section 9.1.1.A.5.5 to read as follows:

f. Enterprises impact attenuator part # WM180023 (crush box) shall be installed.

American Sedan

Item 1. The following changes to the engine rules are being proposed, effective 1/1/08:

Section 9.1.6.D.1.j, change the section to read as follows:

~~Engines may be bored to a maximum of .040" over standard bore size.~~ Engine block shall be cast iron as produced by the manufacturer for the specified displacement of the cars classified but shall not be restricted to the models or years listed. See Section F – Engine Build Sheets for additional specifications

1. Any aluminum replacement ~~dished or flat top (with valve relief's)~~ piston with three piston rings ~~and a stock diameter piston pin~~ may be used. See Section F – Engine Build Sheets for additional specifications
2. Piston rings are unrestricted.
3. Stock or alternate factory OEM connecting rods are permitted. Alternate factory OEM replacement rods shall be available from the vehicle manufacturer as direct replacement OEM-type substitutes. ~~Specifically approved aftermarket connecting rods are permitted.~~ See Section F – Engine Build Sheets for additional specifications.

Change section F. Engine Build Sheets to read as follows:

~~Chevrolet / Pontiac~~

~~GENERAL~~

~~**Manufacturer:** General Motors Corp.~~

~~**Model/Year:** Camaro/Firebird 1982-92 (Includes 1993- Camaro/Firebird and 04-06 GTO prepared to SCCA American Sedan specifications)~~

~~**L / (CID):** 5.0L / (305 CID)~~

No. of Cylinders: V-8

Bore ~~**(Range)**~~ ***Max*:** ~~3.7400-3.7800"~~ *4.040"*

Stroke ***Max*:** ~~3.4750-3.4800"~~ *3.500"*

~~**Firing Order:** 1 8 4 3 6 5 7 2~~
Compression Ratio: 10.30 Max.
Piston to Deck Clr: Not to exceed ~~0.000"~~ *0.013"* above block deck surface (zero deck)
Valve Lift: ~~0.4800"~~ *0.5000"* Max. @ 0.0000" lash
Block ~~**Casting #'s:** 14010201, 14010202, 14010203, 14010231, 14016381, 10164548, 11068561, 14088551, 14093627, 14094766, 14093627, 14094766, 10049047, 14102058, 14016383, 355909, 361979, 460776, 460777, 460778, 10243878~~ *Any General Motors or Ford produced ferrous block meeting other AS required specifications.*
Head Casting #'s: ~~14101081, 14014416~~ *See Spec Line*
Crankshaft Casting #'s: *GM:* 3932442, 14088526, 14088835, 566607
Ford: 2M, 2MA, 2MAB, 2MAC, 2MAD, 2MAE, E1AE-AA, E7AE-AA

Notes:

1. Any commercially available steel crankshaft which meets approved stroke, journal diameters and other specified dimensions and requirements is permitted. The minimum weight for any steel crankshaft shall be ~~48#~~ *42 lbs.*
2. Crankshaft casting seam flash may be deburred.
3. Steel main bearing caps may be fitted provided no other modifications are made to any approved part or specified dimension.

BLOCK

Crankshaft Housing Bore: ~~2.6406 2.6416"~~ *2.4412"-2.6416"*
Block Deck Height: ~~9.0070 9.0430"~~
GM: 9.0070-9.0430"
Ford: 8.1880-8.2240"
Bore Spacing:
GM: 4.4000"
Ford: 4.3800"
~~**Lifter Bore:** 0.8430 0.8450" (Lifter bore sleeving is permitted – 2 lifter bores maximum.)~~
Options:

1. One-piece rear main seal adapter (with seal) may be used.
2. Cylinder block oil restrictors may be installed.
3. Block may be machined for the purpose of installing cylinder O-rings.
4. Block may be machined to true warped surfaces
5. Block casting seam flash may be deburred.
6. *Lifter bore sleeving is permitted.*

CONNECTING RODS

Big End Bore: ~~2.2247 2.2252"~~ *2.2247-2.2398"*
Pin Fit: Floating or Interference Fit
Center to Center: ~~5.6985 5.7015"~~ *Max 6.00"*
Material: Forged Steel / Cast Iron (No Billet)
Alternate Manufacture: *Any rod meeting the AS specs is permitted.*
Options:

1. Wrist pin oiling holes may be added.

CAMSHAFT

Drive Type: Single or Dual-row chain
Lifter Type: Solid, flat-tappet
Lifter Dia: ~~.8420" nominal~~ *.8750" Max*
Options:

1. Camshaft thrust button may be installed

CRANKSHAFT

Main Journal Dia ~~**(Range):**2.4183 2.4493"(1-4), 2.4178 2.4488" (5)~~ *Min: 2.2182"*
Rod Journal Dia ~~**(Range):** 2.0690 2.1000"~~ *Min 2.0690"*
Options:

1. Crankshaft casting seam flash may be deburred.

PISTON

Material: Aluminum (Cast or Forged)
Ring Configuration: 3 rings, above pin
Dome Configuration: ~~Flat top max. (dished piston dome permitted)~~ *Any dome configuration is permitted.*
Pin Diameter: ~~.927" nominal~~ *Max: .930"*
Options:

1. Pins may be centered or offset. Offset shall not exceed factory specifications.

CYLINDER HEADS

~~**Valve Job (Head):** (Refer to Drawing 1)~~
~~**Valve Job (Valve):** (Refer to Drawing 2)~~
Intake Valve Size: ~~1.8350 1.8400"~~ *Max: 1.94"*
Exhaust Valve Size: ~~1.4950 1.5000"~~ *Max: 1.54"*
Valve Stem Diameter: ~~(Refer to Drawing 2)~~ *Minimum stock stem diameter shall be maintained for at least 70% of the overall valve length (measured from stem tip).*
Port Volume (Max.): ~~081 casting: 170.00cc IN / 65.00cc EX~~ *See spec line.*

~~416 casting: 168.00cc IN / 60.00cc EX~~

Options:

1. Angle milling permitted on head gasket or intake manifold gasket surface(s) only. Modification or machining of exhaust manifold surfaces of cylinder head is prohibited.
2. Intake manifold surface may be milled to match angle milled head.
3. Heads may be machined to accept pushrod guide plates.
4. Heads may be machined to accept screw-in rocker studs.
5. Heads may be machined to for the purpose of installing integral o-ring head gaskets.
6. Heat riser passage may be blocked from intake manifold side of cylinder head only.
7. Valve spring pockets may be machined.

Notes:

1. Absolutely no modification, machining, tooling, etc. of the combustion chambers is permitted.

MISCELLANEOUS

1. Direct replacement high volume/pressure oil pumps may be fitted provided that no modification to the engine is required for their installation. Alternate oil pump drive shafts may be fitted.

~~Ford / Mercury~~

~~GENERAL~~

~~Manufacturer: Ford Motor Company~~

~~Model/Year: Mustang 1979-95 (Includes 1996 Mustang prepared to SCCA American Sedan specifications), Mercury Capri 1979-86~~

~~L / (CID): 5.0L / (302 CID)~~

~~No. of Cylinders: V-8~~

~~Bore (Range): 4.0000-4.0400"~~

~~Stroke: 2.9950-3.0000"~~

~~Firing Order: 1-3-7-2-6-5-4-8 or 1-5-4-2-6-3-7-8~~

~~Compression Ratio: 10.30 Max.~~

~~Piston to Deck Clr: Not to exceed 0.013" above block deck surface~~

~~Valve Lift: 0.5000" Max. @ 0.0000" lash~~

~~Block Casting #'s: Any D, E, or F Ford Windsor 302 block casting with 2 bolt main bearing caps.~~

~~Head Casting #'s: F3ZE-AA (GT40), F1ZE-AA (GT40), F77E-AA (GT40-P)~~

~~NOTE: All other legal Ford (Non GT-40) head castings (w/ 1.780" IN & 1.450" EX valve sizes) may be used. No additional preparation is permitted and no consideration will be given to lack of competitiveness in comparison to the GT-40/GT-40P cylinder heads.~~

~~Crankshaft Casting #'s: 2M, 2MA, 2MAB, 2MAC, 2MAD, 2MAE, E1AE-AA, E7AE-AA~~

~~Notes:~~

1. ~~Ford Motorsport block number M-6010-B50 is permitted.~~
2. ~~Any commercially available steel crankshaft which meets approved stroke, journal diameters and other specified dimensions and requirements is permitted. The minimum weight for any steel crankshaft shall be 42#.~~
3. ~~Crankshaft casting seam flash may be deburred.~~

~~BLOCK~~

~~Crankshaft Housing Bore: 2.4412-2.4420"~~

~~Block Deck Height: 8.1880-8.2240"~~

~~Bore Spacing: 4.3800"~~

~~Lifter Bore: 0.8730-0.8750" (Lifter bore sleeving is permitted – 2 lifter bores maximum.)~~

~~Options:~~

1. ~~Cylinder block oil restrictors may be installed.~~
2. ~~Block may be machined for the purpose of installing cylinder O-rings.~~
3. ~~Block may be machined to true warped surfaces~~
4. ~~Block casting seam flash may be deburred.~~

~~CONNECTING RODS~~

~~Big End Bore: 2.2390-2.2398"~~

~~Pin Fit: Floating or Interference Fit~~

~~Center to Center: 5.0885-5.0915"~~

~~Material: Forged Steel / Cast Iron (No Billet)~~

~~Alternate Manufacture: *Any rod meeting the AS specs is permitted.*~~

~~Options:~~

1. ~~Wrist pin oiling holes may be added.~~

~~CAMSHAFT~~

~~Drive Type: Single or Dual row chain~~

~~Lifter Type: Solid, flat tappet~~

~~Lifter Dia: .8740" nominal~~

~~CRANKSHAFT~~

~~Main Journal Dia (Range): 2.2182-2.2490"~~

~~Rod Journal Dia (Range): 2.0928-2.1236"~~

~~Options:~~

1. ~~Crankshaft casting seam flash may be deburred.~~

~~PISTON~~

~~**Material:** Aluminum (Cast or Forged)~~

~~**Ring Configuration:** 3 rings, above pin~~

~~**Dome Configuration:** Flat top max. (dished piston dome permitted)~~

~~**Pin Diameter:** .912" nominal~~

~~**Options:**~~

1. ~~Pins may be centered or offset. Offset shall not exceed factory specifications.~~

~~CYLINDER HEADS~~

~~**Valve Job (Head):** (Refer to Drawing 1)~~

~~**Valve Job (Valve):** (Refer to Drawing 2)~~

~~**Intake Valve Size:** 1.8350 1.8400" (GT40 & GT40 P), 1.775 1.780" (non GT 40)~~

~~**Exhaust Valve Size:** 1.5350 1.5400" (GT40), 1.4450 1.4500" (GT40 P & non GT40)~~

~~**Valve Stem Diameter:** (Refer to Drawing 2)~~

~~**Port Volume (Max.):** 143.0cc IN / 54.0cc EX (GT 40 & GT 40P)~~

~~**Options:**~~

1. ~~Angle milling permitted on head gasket and/or intake manifold gasket surface(s) only. Modification or machining of exhaust manifold surfaces of cylinder head is prohibited.~~
2. ~~Intake manifold surface may be milled to match angle milled head.~~
3. ~~Heads may be machined to accept pushrod guide plates.~~
4. ~~Heads may be machined to accept screw in rocker studs.~~
5. ~~Heads may be machined to for the purpose of installing integral o ring head gaskets.~~
6. ~~Heat riser passage may be blocked from intake manifold side of cylinder head only.~~

~~**Notes:**~~

1. ~~Absolutely no modification, machining, tooling, etc. of the combustion chambers is permitted.~~

~~MISCELLANEOUS~~

1. ~~Direct replacement high volume/pressure oil pumps may be fitted provided that no modification to the engine is required for their installation. Alternate oil pump drive shafts may be fitted.~~

FIGURE 1

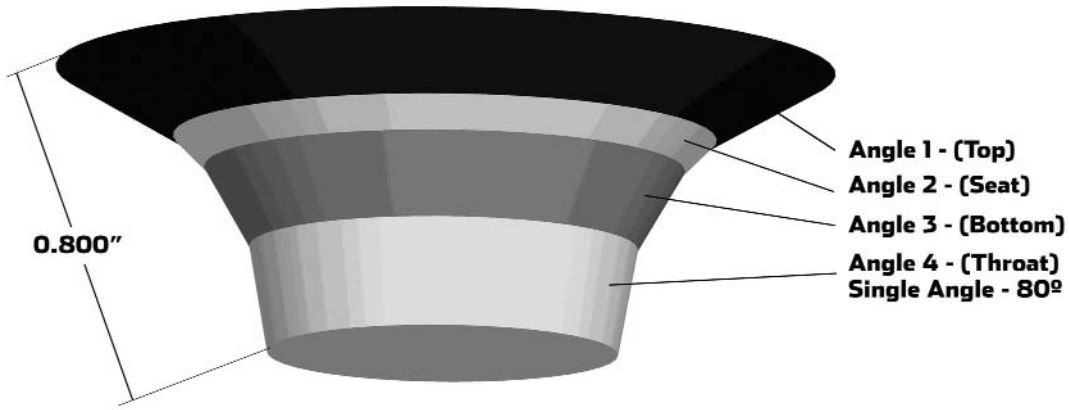

Editor's Note - THE FOLLOWING SPEC PAGE IS AS APPROVED BY THE BOARD AT THE 11/30/07 MEETING. SEE CURRENT TECHNICAL BULLETIN FOR UPDATED AMERICAN SEDAN SPEC PAGE.

AS	Wheel-base (inch)	Gear Ratios (Std.)	Gear Ratios (alt.)	Gear Ratios (alt.)	Brakes (Max) (mm)	Weight (lbs)	Notes:
Camaro & Firebird (82-92)	101.0	3.42, 2.28, 1.45, 1.00	2.95, 1.94, 1.34, 1.00, 0.73	3.35, 1.93, 1.29, 1.00, 0.61	12.2 x 1.25 Disc	3280* 3380 Over 313 Cubic inch Displacement 3580	Dana 44 axle permitted. Harwood fiberglass hood (P/N 12100) is permitted. * Weight w/ block casting #'s: 14010201, 14010202, 14010203, 14010231, 14016381, 10164548, 11068561, 14088551, 14093627, 14094766, 14093627, 14094766, 10049047, 14102058, 14016383, 355909, 361979, 460776, 460777, 460778, 10243878. Engine built to A/S Build Sheet specifications with the following: Head Casting #'s: 14101081, 14014416 Port Volume (Max.): 081 casting: 170.00 cc in/ 65.00 EX; 416 Casting 168.00cc IN /60.00 EX cc
Camaro & Firebird (93-02)	101.1	2.95, 1.94, 1.34, 1.00, 0.73	3.35, 1.93, 1.29, 1.00, 0.61		12.2 x 1.25 Disc	3280* 3380 Over 313 Cubic inch Displacement 3580	Dana 44 axle permitted. Alt Hood: American Sports Car Design, Inc. (Part # S-400) w/rear opening closed. Right side wiper mechanism may be removed and underside of cowl may be modified to facilitate carb installation. P/S bracket may be modified or replaced to accomodate the P/S pump. The cowl and shock tower sheet metal may be modified to allow the installation of an 82-92 F-body brake booster and master cylinder. Camaro SS hood from SLP or SVD is permitted with ram air opening sealed to prevent the passage of air. Engine/transmission installation procedure as provided by SCCA Club Racing shall be utilized. WS6 hood is permitted with ram air opening sealed to prevent the passage of air. * Weight w/ block casting #'s: 14010201, 14010202, 14010203, 14010231, 14016381, 10164548, 11068561, 14088551, 14093627, 14094766, 14093627, 14094766, 10049047, 14102058, 14016383, 355909, 361979, 460776, 460777, 460778, 10243878. Engine built to A/S Build Sheet specifications with the following: Head Casting #'s: 14101081, 14014416 Port Volume (Max.): 081 casting: 170.00 cc in/ 65.00 EX; 416 Casting 168.00cc IN /60.00 EX cc
Mustang Incl. Cobra & Cobra R (79-93)	100.4	3.07, 1.72, 1.00, 0.70	2.95, 1.94, 1.34, 1.00, 0.63	3.35, 1.99, 1.33, 1.00, 0.68	12.2 x 1.25 Disc	3180 Over 313 Cubic inch Displacement 3580	Permitted: Rear disc brake kit (M-2300-C) and/or 5-lug kit (M-2300-F). Engine built to A/S Build Sheet specifications with the following: Head Casting #'s: F3ZE-AA (GT40), F1ZE-AA (GT-40), F77E-AA (GT-40P) Port Volume (Max.): 143.00cc IN/ 54.00cc EX (GT-40 & GT-40P)
Mustang Incl. Cobra thru 95 (94-98)	101.3	2.95, 1.94, 1.34, 1.00, 0.63	3.35, 1.99, 1.33, 1.00, 0.68		12.2 x 1.25 Disc	3380 Over 313 Cubic inch Displacement 3580	Cobra R hood (F5ZV-16612-AA) is permitted with rear opening closed off. Hydro boost braking system is not permitted. Any 1994, and up, Mustang vacuum assisted braking system shall be used. Engine built to A/S Build Sheet specifications with the following: Head Casting #'s: F3ZE-AA (GT40), F1ZE-AA (GT-40), F77E-AA (GT-40P) Port Volume (Max.): 143.00cc IN/ 54.00cc EX (GT-40 & GT-40P)
Mustang Incl. Cobra (99-04)	101.3	2.95, 1.94, 1.34, 1.00, 0.63	3.35, 1.99, 1.33, 1.00, 0.68		12.2 x 1.25 Disc	3380 Over 313 Cubic inch Displacement 3580	Cobra R bodywork and independent rear suspension not permitted. '94-'95 Mustang K-mamber may be used to facilitate installation of 302 engine. Under no circumstances is the '99-'00 K-member to be modified. Hydro boost braking system is not permitted. Any 1994, and up, Mustang vacuum assisted braking system shall be used. Engine built to A/S Build Sheet specifications with the following: Head Casting #'s: F3ZE-AA (GT40), F1ZE-AA (GT-40), F77E-AA (GT-40P) Port Volume (Max.): 143.00cc IN/ 54.00cc EX (GT-40 & GT-40P)
Mustang GT (2005)	107.1	3.38, 2.00, 1.32, 1.00, .675	2.95, 1.94, 1.34, 1.00, 0.63		12.2 x 1.25 Disc	3380 Over 313 Cubic inch Displacement 3580	Engine/transmission installation procedure as provided by SCCA Club Racing shall be utilized. Engine built to A/S Build Sheet specifications with the following: Head Casting #'s: F3ZE-AA (GT40), F1ZE-AA (GT-40), F77E-AA (GT-40P) Port Volume (Max.): 143.00cc IN/ 54.00cc EX (GT-40 & GT-40P)
Capri (79-86)	100.4	3.07, 1.72, 1.00, 0.70	2.95, 1.94, 1.34, 1.00, 0.63	3.35, 1.99, 1.33, 1.00, 0.68	12.2 x 1.25 Disc	3180 Over 313 Cubic inch Displacement 3580	Permitted: Rear disc brake kit (M-2300-C) and/or 5-lug kit (M-2300-F). Engine built to A/S Build Sheet specifications with the following: Head Casting #'s: F3ZE-AA (GT40), F1ZE-AA (GT-40), F77E-AA (GT-40P) Port Volume (Max.): 143.00cc IN/ 54.00cc EX (GT-40 & GT-40P)
GTO (04-06)	109.8	2.95, 1.94, 1.34, 1.00, 0.73	3.35, 1.93, 1.29, 1.00, 0.61		12.2 x 1.25 Disc	3480 Over 313 Cubic inch Displacement 3680	Engine/Transmission installation procedure as provided by SCCA Club Racing shall be utilized (TBD). Production IRS allowed w/ a maximum camber of -0.5° at static ride height. Engine built to A/S Build Sheet specifications with the following: Head Casting #'s: 14101081, 14014416 Port Volume (Max.): 081 casting: 170.00 cc in/ 65.00 EX; 416 Casting 168.00cc IN /60.00 EX cc

Item 2. Effective 1/1/08, change section 9.1.6.D.9.e to read as follows:
The steering column is unrestricted. A collapsible type steering column is strongly recommended. The driver's normal seated position must not be relocated.
~~Steering knuckle flexible coupling may be replaced with steel universal joint.~~

Showroom Stock
Item 1. Effective 1/1/08, change section 9.1.7.E.28 by deleting the section in its entirety:
~~Vehicles previously classified with performance kits may continue to compete with these kits. No new performance kits will be classified.~~

Item 2. Effective 1/1/08, change the second paragraph of section 9.1.7.B by deleting the fifth sentence as follows:
~~Cars that are five (5) calendar years older than the current competition year shall not be eligible for positive competition adjustments.~~

Touring
Item 1. Effective 1/1/08, change section 9.1.10.C.4.b by deleting the second sentence as follows:
~~Cars that are five (5) calendar years older than the current competition year shall not be eligible for positive competition adjustments.~~

MOTION: To approve Pete Hylton's request to create an ongoing series of books that preserve SCCA history, to release the rights to more of Pete Hylton's SportsCar articles for use in these books, and agree to his continued use of old photos from Sports Car and the archives in these books. (Jones/Porterfield) PASSED Unanimous

MOTION: To extend the heartfelt condolences of the Board of Directors to Joanne Jensen on the passing of her husband Bill Stringer. (Jones/Allen) PASSED Unanimous

MOTION: To adjourn. (Holtz/Fairer)

Respectfully submitted,

Jim Christian
Secretary

BOARD OF DIRECTORS MINUTES

BOARD OF DIRECTORS' MINUTES | SPORTS CAR CLUB OF AMERICA, INC. | *Dec. 1, 2007*

The Board of Directors, Sports Car Club of America, Inc. met in Topeka, Kansas, December 1, 2007. The following members participated: Bob Introne, Howard Allen, Jim Christian, Philip Creighton, Larry Dent, R. J. Gordy, Bob Lybarger, Lisa Noble, Andy Porterfield, John Sheridan, Mike Sauce, K.P. Jones and Jerry Wannarka.

2008 Board of Directors Officers and Committees

Officers (Note – Updated in 12/10/07 Minutes)

Chairman – R. J. Gordy
Vice Chairman – John Sheridan
Secretary – Jim Christian
Assistant Secretary –
Treasurer – K.P. Jones
Assistant Treasurer –
5th Member Executive Committee – Bob Introne
1st Alternate Executive Committee – Mike Sauce
2nd Alternate Executive Committee – Jerry Wannarka

NEW BUSINESS

MOTION: To approve the following program board appointments. (Lybarger/Porterfield) PASSED, Unanimous

CLUB RACING BOARD

Bob Dowie - Chairman
Stan Clayton
Peter Keane
Russ McHugh
Dave Gomberg
Chris Albin

STEWARDS PROGRAM

Ken Patterson – Chairman

COURT OF APPEALS

Robert Horansky – Chairman
Richard Templeton
David Nokes
Fred Cummings – Alternate
Jo Anne Jensen - Alternate

NATIONAL ADMINISTRATORS

Driver Licensing	TBA
F&C	Ann Hefty
Emergency Services	Leo Baker
Race Administration	Marina Kraft
Registration	Rusty Goodale
Scrutineering	Toni Creighton
Sound Control	Wayne Briggs
Starters	Dee Greaves
Timing and Scoring	Mark Waggoner
Archivist/ Historian	Peter Hylton
Grid/Pit	Gayle Lorenz
Chief Driving Instructor	Ed Zebrowski
Medical Safety	Dr. Jim Butler

SOLO EVENTS BOARD

GLDiv - Rick Myers
SEDiv - Donnie Barnes
SWDiv - Erik Streinieks
NORPAC - Ron Bauer
SOPAC - Jason Isley
RMDiv - Chris Dorsey
MIDiv – Dave Whitworth
CENDiv - Steve Wynveen
NEDiv - Tina Reeves - Chair

DIVISIONAL SOLO STEWARDS

GLDiv – Jason Tipple
SWDiv – Todd Farris
SEDiv – Heyward Wagner
CENDiv - TBD
SOPAC – Brian Peters
NORPAC – Brian Nemy
NEDiv – Chris Franson
RMDiv – Lindsay Wilson
MIDiv – Vern Maxey

SOLO SAFETY COMMITTEE (SSC)

Kathy Barnes, Chair
Brian Robertson
John Lieberman
Bruce Bellom
Aruch Poonsapaya
Cal Craner
Janice Rick

ROAD RALLY BOARD

Kevin Poirier – Chairman
Lois Van Vleet
Rick Beattie
Charles Edwards

DIVISIONAL ROADRALLY STEWARDS

SEDiv - Bob Ricker
SOPAC - Jeanne English
GLDiv - Mike Bennett
CENDiv - Mike Thompson
NEDiv - Ted Goddard
MIDiv – Rich Bireta
NORPAC – Monte Saager
RMDIV - TBA
SWDiv - Sasha Lanz

ROADRALLY RULES COMMITTEE

Rick Beattie - Chair
Mike Thompson
Jim Freidman
W. David Teter
J Toney
Dave Kolb

DIVISIONAL RALLYCROSS STEWARDS

SW Div – Richard Miller
GLDiv – David Rudy
CenDiv – Brent Carlson
MidDiv – Jerry Doctor
NEDiv – Scott Beliveau
NorPac – Ben Bradley
RMDiv – Karl Sealander
SEDiv – David Brooks
SOPAC – Jayson Woodruff

RALLYCROSS BOARD

Mark Walker – Chair
Tom Nelson
Mark Utecht
Jayson Woodruff
John Barnett
Matt Nichols

TIME TRIALS ADMINISTRATIVE COUNCIL

Southeast - Stephen Thompkins
Southern Pacific –
Central – Toni Machi
GLDiv –
Northeast – Matt Rowe
Midwest – Jan Rick
NORPAC - Dave Deborde
Rocky Mountain – Josh Hadler
Southwest – Dr. Kent Carter

MOTION: To approve the 2008 recipient of the Woolf Barnato Trophy. (Introne/ Sauce)

MOTION: To adjourn.

Respectfully submitted,

Jim Christian
Secretary

BOARD OF DIRECTORS MINUTES

BOARD OF DIRECTORS' MINUTES | SPORTS CAR CLUB OF AMERICA, INC. | *Dec. 10, 2007*

The Board of Directors, Sports Car Club of America, Inc. met via teleconference December 10, 2007. The following members participated: Bob Introne, Chairman, Howard Allen, Jim Christian, Charlie Clark, Larry Dent, R.J. Gordy, Brian Holtz, Bob Lybarger, Andy Porterfield, John Sheridan, Mike Sauce and K.P. Jones. Jim Julow, President also participated. Attending but not voting, Phil Creighton, Lisa Noble, Jerry Wannarka.

MOTION: To approve the amended minutes of the November 30, 2007 meeting. (Porterfield/Sauce) PASSED, Unanimous

PRESIDENT'S REPORT

Jim Julow reported on the meeting with Mazda at this years Performance Racing Industry show. A press release will go out tomorrow.

OLD BUSINESS

MOTION: To amend the minutes of the November 30th, meeting as follows: That SCCA Inc. forgives $8,325 of the remaining debt owed by the SCCA Foundation. (Allen/Fairer) PASSED Unanimous

MOTION: To waive the provisions of GCR paragraph 3.9.2.E, to allow GT3 to participate in the 2008 Runoffs. (Dent/Allen) PASSED Voting NO, Jones, Christian, Introne, Sheridan

MOTION: To waive the provisions of GCR paragraph 3.9.2.E, to allow GP to participate in the 2008 Runoffs. (Sheridan/Jones) FAILED Voting NO, Holtz, Lybarger, Clark, Sauce, Gordy, Allen, Dent, Abstaining, Introne, Jones, Christian, Porterfield

MOTION: To approve the following GCR change as recommended by the Club Racing Board. (Sauce/Lybarger) PASSED Unanimous

Effective 1/1/08, change the second paragraph on section 9.1.8.C.4.b to readas follows:

1999-up cars shall use the bump stops from the Mazdaspeed kit (p/n 0000-04-5993-AW) in conjunction with the 1999-up stock upper mount assembly consisting of the upper mount (p/n: NC10-28-340C), the upper mount bushing (p/n: NC10-28-776) and the upper mount washer (p/n: NC10-28-774), and shock body spacer over the shock shaft (p/n 1234-56-789-AW). All other OEM upper mounting hardware shall be discarded. 1990-1997 cars may use the bump stops from the Mazdaspeed kit (p/n 0000-04-5993-AW) in conjunction with the 1999-up stock upper mount assembly consisting of the upper mount (p/n: NC10-28-340C), the lower mount bushing (p/n: NC10-28-776) and the upper mount washer (p/n: NC10-28-774). Non-OEM equivalents may be used in place of the upper mount, upper mount bushing, and upper mount washer only. No other modifications are allowed.

NEW BUSINESS

There was considerable discussion over a plan presented by Mike Sauce for combining classes at the Runoffs. This was not formally acted upon by the BOD, but was referred to the CRB for refinement, study and public comment.
2008 Board of Directors and Officers and Committees

Officers
Chairman - R J Gordy
Vice Chairman - John Sheridan
Secretary - Jim Christian
Assistant Secretary - Lisa Noble
Treasurer - K.P. Jones
Assistant Treasurer - Bob Introne
5th Member Executive Committee - Bob Introne
1st alternate Executive Committee - Mike Sauce
2nd Alternate Executive Committee - Jerry Wannarka

Liaisons
Solo Event Board - Lisa Noble/Bob Introne
Club Racing Board - Jerry Wannarka/Bob Lybarger
Performance Rally board - n/a
Road Rally Board - Howard Allen
Enterprises Board - Andy Porterfield
Insurance Committee - Larry Dent
Stewards - Jerry Wannarka
Court of Appeals - Howard Allen
SCCA Foundation - Larry Dent
TTAC - Lisa Noble

BoD Committees

Budget and Finance
K.P. Jones, Chair
Mike Sauce
Jerry Wannarka
Howard Allen
Phil Creighton

Compensation
John Sheridan
Bob Lybarger
Larry Dent
Phil Creighton
K.P. Jones

Insurance
Larry Dent

Director Dujour
Lisa Noble

Planning
Jerry Wannarka, Chair
Jim Christian
John Sheridan
Mike Sauce
Lisa Noble
K.P. Jones

Race Track
Bob Introne, Chair
Mike Sauce
Larry Dent
Howard Allen
Bob Lybarger

SCCA Foundation
Larry Dent
Lisa Noble
Howard Allen

SCCA Enterprises
Andy Porterfield, Chair

SCCA Pro Board
Brian Holtz, Chair
Howard Allen
K.P. Jones
Jim Julow

MOTION: To approve the following changes to the Solo Rules, effective1/1/08, as recommended by the SEB. (Clark/Sheridan) PASSED Unanimous

SOLO STREET PREPARED CATEGORY
- o Add the New Beetle 1.8T to the same listing line in DSP as the Golf and Jetta ('99-'05). (ref 07-011)
- o Combine all 1st-gen Toyota MR2's onto one line in CSP. (ref. 06-091)

MOTION: To adjourn. (Dent/Allen)

Respectfully submitted,

Jim Christian
Secretary

CLUB RACING BOARD MINUTES

CLUB RACING BOARD MINUTES | *Dec.4, 2007*

The Club Racing Board met by teleconference on December 4, 2007. Participating were Bob Dowie, Chairman; Chris Albin, Stan Clayton, Peter Keane, Russ McHugh, and Craig Taylor. Also participating were and Mike Sauce, BoD Liaison; Terry Ozment, Vice President of Club Racing; Jeremy Thoennes, Technical Services Manager; John Bauer, Technical Assistant Club Racing; and Lauri Burkons, CRB Secretary, and Dave Gomberg, Chairman of the Formula/Sports Racing advisory committee.

In addition to those items covered in Technical Bulletin 08-01, the following decisions were made:

PROPOSED RULE CHANGES OR CAR RECLASSIFICATIONS

The following subjects will be referred to the Board of Directors for approval. Address all comments, both for and against, to the Club Racing Board. Comments may be e-mailed to crb@scca.com.

Formula/Sports Racing

Item 1. Effective 2/1/08: Add the following before the last sentence of the first paragraph in section 9.4.5:

Closed cockpit sports racer cages may be constructed in accordance with 9.4. ROLL CAGES FOR GT AND PRODUCTION BASED CARS

Item 2. (FB) Effective 11/1/08: Add new paragraph J to section 9.1.1.H.4 as follows:

J. The stock chain tensioner may be replaced with any mechanical chain tensioner.

Item 3. (FF) Effective 11/1/08: Remove section 9.1.1.D.2.s.10 and renumber subsequent paragraphs:

~~Exhaust Outlets~~

~~Exhaust outlets on cars registered after January 1,1986 shall not extend more than 60cm (23.60") behind the centerline of the rear axle and shall be positioned between 30mm (11.8") and 60cm (23.6") from the ground, measured to the bottom of the exhaust pipe.~~

Item 4. (FV) Effective 2/1/08: Change section 9.1.1.C.3.a.8 as follows:

The rubber portion ~~only~~ of the bump stop and *any portion or all of the bump stop horn* may be ~~alterned or~~ removed *up to its base at the beam upright*.

Item 5. (SRF) Effective 2/1/08: Change section 9.1.9.C.5.k by creating a new section l. for the third paragraph to read as follows:

l. Required Bodywork Modification:

A 22.5" diameter wheel arch ~~may~~ *shall* be cut in each side of the tail section. Viewing the tail section from the side, draw a vertical line at the drive axle centerline. Locate the top of the wheel arch at a point measured from the bottom edge of the tail section 9.25" vertically along the centerline. The 22.5" diameter circle intersects the bottom edge of the tail section 11.1" either side of the centerline. The tail section may be reinforced in the forward and aft portions of the wheel arch. Dimension tolerance is +/- 0.75".

Grand Touring

Item 1. Effective 2/1/08: Change section 9.1.2.F.4.b.13 as follows (portions omitted remain unchanged):

A spoiler *or a Club Racing specified rear wing for GT2* may be fitted to the rear of the car. Note: O.E.M. rear spoilers and wings are note permitted unless specifically listed on the vehicle's specification form.

If a spoiler is used, it shall be contiguous with the bodywork and shall comply with the following:

(Existing sections 9.1.2.F.4.b.13.a-d)

If a Club Racing specified wing is used (GT2 only), it shall comply with the following:

E. Specifications: Unmodified single element Liebeck airfoil #1LD104E scaled to a chord length of 10.75 inches. The maximum cross-sectional tolerance of the wing profile is 0.060 inch. A maximum 0.50 inch Gurney tab is allowed at the trailing edge of the wing element. The tab must be mounted 90 degrees to the upper wing surface. No air may pass between the tab and the wing. The wing end plates must fit within a rectangle measuring 11.00 inches long by 4.00 inches tall. No portion of the wing element or tab may extend beyond the perimeter of the endplate. The endplates must be mounted parallel to the vehicle centerline, and must be perpendicular to the ground. Endplates must be flat, with no curvature or Gurney tabs. The maximum width of the entire wing assembly (wing element, endplates, Gurney tab, and mounting hardware) is 68.00 inches, but no wider than the rear body width including fender flares.

F. Wing mounting: The entire wing assembly must be mounted below the highest point of the roof or roll cage main hoop whichever is higher measured at the highest point. The trailing edge of the wing assembly must be located within an area defined by a point; 6" forward of rearmost bodywork measured at vehicle centerline. Two wing mounting posts must be used, with each one located between 8"-20" inboard from end of wing. The wing mounting posts shall not exceed 85 square inches

each. The maximum wing angle from horizontal is 30-degrees.

Item 2. Effective 2/1/08: Change section 9.1.2.F.4.b.12 as follows:

A spoiler may be fitted to the font of the car. It shall not protrude beyond the overall outline of the car as viewed from above except in GT2 where a front splitter may extend up to *three* (3) inches. In all classes, the spoiler shall not extend aft of the forward most part of the front fender opening (cutout), and shall not be mounted…

Production

Item 1. Effective 11/1/08: Reclassify the EP Lotus 7 series 4 to FP at 1,810 lbs.

Item 2. Effective 11/1/08: Reclassify the EP Volvo 142/142E to FP at 2,150 lbs.

Item 3. Effective 11/1/08: Reclassify the FP Volvo 142/144 to GP at 2,100 lbs.

Item 4. Effective 11/1/08: Reclassify the EP Lotus Europa to FP at 1,630 lbs.

RECOMMENDATIONS TO THE BoD

None

MEMBER ADVISORIES

None

NEW CAR CLASSIFICATIONS

GT2 – MGB GT V8 and MG RV8

GTL – Lotus Europa bodywork

GTL – Mazda RX-3 bodywork

GTL – Mazda RX-7 bodywork

GTL – Nissan/Datsun SRL 311U roadster bodywork

FP – Acura Integra (90-93) – Level 2

HP – BMW 1600 (68-71) – Level 2

HP – Toyota Corolla (71-74) – Level 2

HP – Triumph Spitfire 1300 – Level 1 Suspension/Level 2 Drivetrain

ST – Austin Martin V8 Vantage N24 (07)

ST – Chevrolet Corvette C6 Z06 (08)

ST – Lotus Sport Exige Cup 255 (07)

T1 – Chevrolet Corvette Coupe (08)

T1 – Saleen Parnelli Jones Mustang (07)

T1 – Mustang Steeda Q335 (07)

T2 – Acura TL Type S (07-08)

T2 – Chevy Cobalt SS (08)

T2 – Chevy HHR SS (08)

T2 – Pontiac Solstice GXP (08)

T3 – Lexus IS300 (02-04)

T3 – Honda S2000 CR

T3 – Mazda RX-8 (08)

T3 – Mini Cooper S (07-08)

T3 – Subaru Legacy (07-08)

T3 – Volkswagen GTI (06-08)

SSB – Mazda MX-5 (08)

SSB – Pontiac Solstice (08)

SSC – Cobalt Sport (08)

SSC – Honda Accord Coupe LS-X (08)

SSC – Mazda3 s (08)

SSC – Pontiac G5 GT (08)

REFERRED or TABLED

Formula/Sports Racing

CSR – Clarify forced induction preparation (Staff).

Grand Touring

GTL – Classify the Nissan 350Z (Burke). Tabled for further discussion.

Production

1. P – Allow girdles in rewrite (Cypher). Tabled for further discussion.
2. P – Reclassify the Z3 1.9 to FP (Moore/Sturgeon). Tabled for evaluation of the EP class.
3. P – Classify the 1997 Z3 2.5 to EP (Moore/Sturgeon). Tabled for verification of specifications.
4. EP – Slow down the Prelude (Ira). Tabled for further evaluation of the EP class.
5. EP – Reduce the weight of the EP Miata (Heintzman). Tabled for further evaluation of the EP class.
6. EP – Allow 32 mm chokes for the Triumph TR6 (Halkias). Tabled for further evaluation of the EP class.
7. EP – Classify the S2000 (Swan). Tabled for further evaluation of the EP class.

Touring/Showroom Stock

1. T1 – Increase the Viper restrictor and remove weight (Pinaric). Tabled for further research.
2. T2 – Allow an alternate radiator for the Mitsubishi Lancer Evo (Moses). Tabled for further research.
3. T3 – Reclassify the Chrysler Crossfire to SSB (Lipperini). Tabled for further research.
4. SSC – Allow the Toyota Corolla GTS an accusump (Peele). Tabled for follow up to obtain specific part and installation information.

NOT RECOMMENDED

GCR

Do not allow competitors to stop in pit lane before going to impound (Burdge). The rule is adequate as written.

Formula/Sports Racing

1. F – Require six laminates of 5 ounce material for nose boxes (Lathrop). There are existing nose boxes that are compliant with the rules and have demonstrated their viability for this purpose.
2. FC – Allow aluminum calipers (Wright). The committee has discussed this request numerous times and does not support the change as it would become a “must have” item.
3. F500 – Allow the 923 168 cylinder head with alternate gasket and specify a combustion chamber size (Wassersleben). There are sufficient parts for the allowed engines.
4. F1000 – Allow V twins up to 1000 cc (Madsen). We will reconsider for the 2009 season.
5. SR – Clarify the louver opening/tire visibility rules (Devins/Schumacher). The rules are adequate as written.
6. SRSCCA – Change the name to ESR (Skirmants). Not at this time, as the class is still part of CSR.
7. SRF – Require tires to be used as manufactured (Skirmants). This is not enforceable.

Grand Touring

1. GT3 – Allow the 12A Bridgeport to run with no chokes (Jacalone). We recently made changes and wish to monitor the results.
2. Reduce the weight of the 12A peripheral port (Christman). We will monitor performance.
3. GTL – Allow the KA24 and SR20 Nissan engine (Burke). The engines exceed the displacement parameters of the class.
4. GTL – SIR plan (Spencer). We continually review the SIR sizes. We have not allowed a tiered structure for carburetor chokes and are not considering it for SIRs either.
5. GTL – Tiered SIR proposal for tub cars (Downey/Zekert). We continually review the SIRs.
6. GTL – Increase all weights by 2.5 percent (Zekert). Weights are appropriate as listed.

Production

1. P – Allow undercut valves in limited prep (Bartell). We have discussed this on several occasions and believe this is not a positive change for the category.
2. P – Allow alternate brakes (Church/Halkias). We wish to keep the Production category on production brakes.
3. HP – Reduce the weight of the 510 to 1,860 lbs, allow alternate carburetors and alternate head (Meller). We have made recent adjustments to HP and wish to monitor the results.
4. HP – Help the VW Scirocco (Barrack). We have made changes to other cars in the class and wish to monitor the results.

Touring/Showroom Stock

1. T2 – Allow the supercharged Lotus if nothing else is approved (Zabinski). We have made changes to the Lotus and wish to monitor its performance.
2. T2 – Help the Lotus Elise and Exige (6 letters). We have made changes to the Lotus and wish to monitor its performance.
3. Classify the 08 Mini Cooper S JCW Challenge Car (Davis). We will consider the car when it becomes available for sale.
4. SS – Allow stainless steel brake lines (Niffenegger/Lipperini). SS does not allow such changes.
5. T3 – Reduce the weight of the Honda S2000 (3 letters). We have made changes to the car and wish to monitor its performance.
6. SSB – Remove the restrictor from the Z4 (Tippens/Daniels). We have made changes to the Z4 and wish to monitor its performance.
7. SSC – Allow an alternate oil pan for the 2005 Corolla XRS (Peele). We have already approved an accusump pending the receipt of parts.

Previously Addressed

Addressed in Technical Bulletin 08-01 or the January 2008 FasTrack:

FE – Spec a front crush structure (Skirmants).

Addressed in Technical Bulletin 07-12 or the December 2007 FasTrack:

GT3 – Allow Production cars to compete in GT (Spiers/Fox).

GT3 – Classify the 13B Streetport with unrestricted carburetion and no SIR (Biesterfeldt).

GTL – Classify the MG Midget/Austin Healey bodies (Linn).

GTL – Allow G Production in GTL (Zekert)

GP – What do you plan to do with GP (Hammer).

IT – Allow jacking points (Miskoe).

T1 – Allow removal of emergency brake on the Corvette C5 (Ingle).

SM – Reduce the weight of the 1.6 Miata (3 letters).

No Action Required

GCR

1. Runoffs input (Flesher/Berkkley) Thank you for your input.
2. Opposition to timing and scoring language (Killian/Kumor). Thank you for your input.
3. Opposition to 24 class rule (Welling). Thank you for your input.
4. Runoffs schedule input (Ward). Thank you for your input.
5. Go karting input (Czmowski). Thank you for your input.
6. Fuel input (Naimi). Thank you for your input.
7. Clarify the use of FIA 1986 driving suits (Brown). The implementation of the new rules has been delayed.

Formula/Sports Racer

1. FC – Keep the 25 lb penalty for the aluminum head (Klutsenbaker). Thank you for your input.
2. FC – Opposition to aluminum calipers (LaRue). Thank you for your input.
3. FE – Opposition to weight increase (Riegel). Thank you for your input.
4. FS – Formula First input (Bonow). Thank you for your input.
5. F/SR – Labor rates (Staff). Thank you for your input.

Grand Touring

1. GT – Labor rates (Staff). Thank you for your input.
2. GTL – GTL input (various). Thank you for your input.
3. GTL – GTL Runoffs input (Wright/Bovis). Thank you for your input.
4. GTL – Review the 2-valve SIR sizes (Spencer).
5. GTL – Increase the L16 Nissan SIRs to 27 mm (Dewitt). Thank you for your input.
6. GTL – Adjust the current SIR sizes (9 letters). Thank you for your input.

Improved Touring

1. IT – Support for open ECUs (3 letters). Thank you for your input.
2. IT – Opposition to open ECUs (Wire). Thank you for your input.

Production

1. P – Prod rewrite input (Bartell). Thank you for your input. The more restrictive suspension rules were incorporated into the rewrite, based on member input.
2. P – Do not require stock rocker arms (Boruch). Thank you for your input. Rockers are open in level one preparation.
3. P – Suggested definitions for Limited Prep suspension (Lemon). Thank you for your input.
4. P – Opposition to required stock location for engine mounts (Britton). Thank you for your input.
5. P – Opposition to suspension and steering language (Britton). Thank you for your input.
6. P – Labor rates (Staff). Thank you for your input.

American Sedan

1. Opposition to engine build specifications (Broglin/Langston). Thank you for your input.
2. Resolve the 17” wheel issue (Topel). Thank you for your input.

Touring/Showroom Stock

1. T – Support for interior removal (Brannon/Buttermore). Thank you for your input.
2. T – Opposition to interior removal (Faitz). Thank you for your input.
3. T2 – Monitor T2 class (Brannon). Thank you for your input.
4. T2 – Do not penalize the EVO (Grand). Thank you for your input.

5. T/SS – T/SS input (Brecht). Thank you for your input.

6. SS – Support for continuing classification through 10th year of latest model year on spec line (Gauzens). Thank you for your input.

7. SS – Opposition to trunk kits (Gauzens). Thank you for your input.

8. SSB – Support for reclassification of 2002-06 Sentra SER to SSC (Lipperini). Thank you for your input.

Spec Miata

Labor rates (Staff). Thank you for your input.

Resumes

David Arken – Thank you for your resume. We will keep it on file.

CLUB RACING TECHNICAL BULLETIN

DATE: December 4, 2007
NUMBER: TB 08-01
FROM: Club Racing Board
TO: Competitors, Stewards, and Scrutineers
SUBJECT: Errors, and Omissions, Competition Adjustments, Clarifications, and Classifications.

All changes are effective 1/1/08 unless otherwise noted.

GCR

1. As approved by the BoD in this FasTrack; change section 3.3.5.E, p. 13, as follows: A $10 surcharge for each Spec Racer, Formula SCCA, and *Spec Miata* car must be submitted to the SCCA National Office with the tow fund and excess sanction fees for the event.
2. As approved by the BoD in this FasTrack; change the first sentence of section 4.4.3.E.3, p. 25, to read as follows: A driver who logs six (6) Regional races on the Novice Permit and then applies directly for a National License may be licensed for a fee of $85 $75.
3. As approved by the BoD in this FasTrack; change section 4.4.5.D.3, p. 27, to read as follows: National License fee of $85 $75, payable to SCCA; includes GCR.
4. As approved by the BoD in this FasTrack; change section 4.4.7.C.3, p. 28, to read as follows: Vintage License fee of $65 $55, payable to SCCA; does not include a GCR.
5. Correct section 8.1.2, p. 66, by changing the section reference at the end of the paragraph as follows: 5.12.2.~~C.~~
6. As approved by the BoD in this FasTrack; change section 8.1.4, p. 66, to read as follows: To obtain a determination on the legality of a vehicle or component, without filing a formal protest, a competitor may request such a ruling from the Club Racing Office. The Chairman of the Stewards Program will then convene a first court. *The protest and appeal procedures described in sections 8.3 and 8.4 apply except that* ~~Their decision would then be reviewed by the Court of Appeals. The fee for this service is $250. A portion of this fee may be refundable at the discretion of either or both courts. P~~ *p*enalties or penalty points will not be assessed in the event of a negative ruling. *Also, a* non-compliant ruling will be published; a compliant ruling will not be published. *The fee for this service is $125 for the first court and $175 for the Appeals Court.*
7. As approved by the BoD in this FasTrack; change the third and fourth sentences of section 8.4.3, p. 70, to read as follows: The Notice of Appeal shall be U.S. Government postmarked or registered with a carrier service (i.e., UPS, Federal Express, etc.) within ten (10) days after the announcement of the decision being appealed has been given to the appellant and shall include the appropriate appeal fee of $*175* ~~125~~, payable to SCCA, Inc. A minimum of $*100* ~~50~~ of the appeal fee will be retained by the SCCA on all appeals that are filed, unless otherwise determined by the Court of Appeals.
8. Correct the first sentence of section 9.3.18.G.2, p. 80, by adding 8854/98 to the accepted FIA specification list.
9. As approved by the BoD in this FasTrack; change section 9.3.19.A, p. 81, as follows: Driving suits that effectively cover the body from the neck to the ankles and wrists, manufactured of fire resistant material, worn with underwear of a fire resistant material. One piece suits are highly recommended. All suits and underwear shall be made of the following accepted fire resistant materials: Nomex, Kynol, FPT, IWS (wool), Fiberglass, Firewear™, Durette, Fypro, PBI, Kevlar, NASAFIL, or any suit carrying an SFI 3-2A/1 or higher certification patch. Underwear of PROBAN is approved. The following specific manufacturer(s) material combinations are also recognized: Simpson Heat Shield, Leston Super Protex, FPT Linea Sport, Carbon X, and Durette X-400. Underwear is not required with three-layer suits or with suits carrying FIA standards of 8856-1986 or 8856-2000 or SFI 3-2A/5 or higher (e.g., /10, /15, /20) Certification Patch. FIA homologated driving suits and underwear are recommended.

Effective 1/1/09: change section 9.3.19.A as follows:
Driving suits that effectively cover the body from the neck to the ankles and wrists~~, manufactured of fire resistant material, worn with underwear of a fire resistant material~~. One piece suits are highly recommended. All suits *shall bear an SFI 3.2A/1 or higher certification label or FIA 8856-2000 homologation.* ~~and underwear shall be made of the following accepted fire resistant~~

~~materials: Nomex, Kynol, FPT, IWS (wool), Fiberglass, Firewear™, Durette, Fypro, PBI, Kevlar, NASAFIL, or any suit carrying an SFI 3-2A/1 or higher certification patch. Underwear of PROBAN is approved. The following specific manufacturer(s) material combinations are also recognized: Simpson Heat Shield, Leston Super Protex, FPT Linea Sport, Carbon X, and Durette X-400.~~ *Underwear of fire resistant material shall be used except* ~~Underwear is not required~~ with ~~three layer suits or with~~ suits carrying FIA standard~~s of 8856-1986 or~~ 8856-2000 or SFI 3-2A/5 or higher (e.g., /10, /15, /20) Certification Patch. ~~FIA homologated driving suits and underwear are recommended.~~

10. As approved by the BoD in this FasTrack; add a new section 8. to 9.4.5.G to read as follows:
    8. Formula SCCA cars shall not be required to use a crush box until March 1, 2008.

Formula

FE

1. As approved by the BoD in this FasTrack; add a new section f. to section 9.1.1.A.5.5, p. 184, to read as follows:
   f. Enterprises impact attenuator part #WM180023 (crush box) shall be installed, Effective March 1, 2008.
2. As approved by the BoD in this FasTrack; change section 9.1.1.A.5.13.a., b., and c. p. 189, as follows:
   ~~a. A competitor shall start the race on the same set of tires (meaning the original four) as used in a qualifying session for the race. The only exception is rain tires. It is the responsibility of the competitor to ensure their tires are marked appropriately for qualifying and race sessions. It is recommended that regions offer these services at a central location such as pre grid or Tech.~~
   ~~b. A change of tires during or between a qualifying and race session shall automatically result in all previous times being disallowed.~~
   ~~c. If a tire is damaged during a qualifying session the competitor may replace that tire with a used tire upon approval of the Chief Steward. Should a tire be replaced for any reason, the competitor shall forfeit his grid position and start at the back of the grid.~~

   a. A competitor shall start the race on tires used in a qualifying session for the race as identified by markings made on the tires by a race official. It is the responsibility of the competitor to ensure that his or her tires are appropriately marked prior to (e.g. on the false grid), during, or immediately after (e.g. as the car leaves the track) a qualifying session.
   b. For races with more than one qualifying session, a competitor shall start the race on any marked tires from any qualifying session for the race.
   c. If a competitor chooses to start the race on any tires that were not used in a qualifying session for the race and not appropriately marked, the competitor shall forfeit his or her grid position and start from the back of the grid. This forfeiture of grid position shall not apply if all qualifying sessions for the race were run under rain or wet conditions.
   d. A complete set of four (4) rain or wet track tires may be used at the competitor's discretion for any race. Rain tires may be in new or used condition and require no special marking if used as a complete set of four.
3. Change section 9.1.1.A.5.15, p. 189, to read as follows: The car shall weigh *1250* ~~1265~~ lbs. minimum, including the driver.

FC

1. Correct the tenth sentence of section 9.1.1.B.4.a, p. 197, to read as follows: Only the Ford #RFYS4E6090AC *or #RFYS4E6090AD* head is allowed.

FF

1. Change the following specification of section 9.1.1.D.2.d, p. 217, as follows:
   ~~Max. length: 3.80"~~

FB

1. Change section 9.1.1.H.3.E, p. 243, to read as follows: A diffuser is permitted behind the front of the rear tires. ~~The maximum width of the diffuser is 95cm~~. *The diffuser may be divided internally into multiple sections. The radius of transitions between the diffuser sides and adjacent horizontal structures may be up to 25mm. The width of the diffuser, as measured between its sides and above any radiused transitions, may not exceed 95cm in any lateral section. Strakes within the diffuser are allowed.*
2. Clarify line "K" of the F1000 Dimensions Table, p. 245, to read as follows:
   K. Maximum front wing width *(includes endplates)*.....135 cm

Grand Touring

GT2-L

1. Section 9.1.2.F.4.c.10, p. 273, change the section to read as follows: Substitute wheels of any type may be used. All four (4) wheels shall be of the same diameter except in GT2. GT2 cars may run any tire/wheel combination provided that the tire does not exceed a maximum cross section width of 12.0" in the front and 13.75" in the rear. *GT2 cars using 15 x 7" wheels exclusively may reduce the listed weight by 50 lbs.* The maximum wheel size for GT3 cars is ...

GT2

1. Classify the MGB GT V8 and MG RV8 in GT2.

Add new spec lines to GTCS p. 281, Model: MGB GT V8 & RV8, Body Style: 2dr, Driveline: RWD, Wheelbase: 91.0, Engine Type: 8 Cyl OHV, Bore x Stroke(mm): 71.1 x 88.9, Displ.(cc): 3528, Head Type: Alum, Crossflow, Valves/Cyl.: 2, Fuel Induction: 38mm SIR, Weight(lbs): 2280.

2. Engines – NISSAN, change the specs for the KA24E series engine to read as follows: Fuel Induction: Unrestricted, Weight(lbs): 2050.

GTL

1. Engines – BLMI, p. 314, change the specs for the W10B16 series engine to read as follows: Weight(lbs): 2000.
2. Engines – FORD, p. 317, change the specs for the Zetec series engine to read as follows: Weight(lbs): 2000.
3. Engines – HONDA, p. 318, change the specs for the D15 series engine to read as follows: Weight(lbs): 2000.

4. Engines – HONDA, p. 318, change the specs for the D16 series engine to read as follows: Weight(lbs): 2000.
5. Engines – HONDA, p. 318, change the specs for the D16A series engine to read as follows: Weight(lbs): 2000.
6. Engines – HONDA, p. 318, change the specs for the B16A series engine to read as follows: Weight(lbs): 2000.
7. Engines – HONDA, p. 318, change the specs for the B18 series engine to read as follows: Weight(lbs): 2000.
8. Lancia Scorpion, p. 318, correct the specs by adding to the Notes as follows: Non-tube frame track: (R) 61.5.
9. Classify the Lotus Europa bodywork in GTL.

Add new spec line to GTCS, p. 319, Cars – LOTUS, Model: Europa, Body Style: 2dr, Driveline: RWD, Wheelbase(in): 91.0.

10. Classify the Mazda RX-3 bodywork in GTL.

Add new spec line to GTCS, p. 319, Cars – MAZDA, Model: RX-3, Body Style: 2dr, Driveline: RWD, Wheelbase(in): 91.0.

11. Classify the Mazda RX-7 bodywork in GTL.

Add new spec line to GTCS, p. 319, Cars – MAZDA, Model: RX-7, Body Style: 2dr, Driveline: RWD, Wheelbase(in): 95.3, 95.5, 95.7, Notes: Non-tube frame track: (F)60.7 (R)60.3.

12. Engines – MAZDA, p. 320, change the specs for the 1597cc engine to read as follows: Weight(lbs): 2000.
13. Engines – MAZDA, p. 320, change the specs for the 1839cc engine to read as follows: Weight(lbs): 2000.
14. Classify the Nissan/Datsun SRL 311U Roadster bodywork in GTL.

Add new spec line to GTCS, p. 320, Cars – NISSAN, Model: SRL 311U Roadster, Body Style: 2dr, Driveline: RWD, Wheelbase(in): 89.8.

15. Engines – NISSAN, p. 321, change the specs for the SR16VE series engine to read as follows: Weight(lbs): 2000.
16. Engines – TOYOTA, p. 326, change the specs for the 4AG series engine to read as follows: Weight(lbs): 2000.
17. Engines – VOLKSWAGEN, p. 327, change the specs for the 1780cc (16 valve) engine to read as follows: Weight(lbs): 2000.

Production

1. Clarify the last sentence of section 9.1.5.E.10.c, p. 415, to read as follows: The installation of a dry sump tank and cover that extends above six inches below the highest point of the door is permitted but the tank and cover must be located completely within 18" of the front or rear cowl and no higher than the cowl.

FP

1. Classify the Acura Integra (90-93) in FP with Level 2 prep.

Add new spec line to PCS-B, p. 432-433, Acura Integra (90-93), Prep. Level: 2, Weight(lbs): 2235 *2291 **2347, Engine Type: 4 Cyl DOHC, Bore x Stroke(mm): 81.0 x 89.0, Displ.(cc): 1835, Block Mat'l: Alum, Head Mat'l: Alum, Valves IN & EX(mm): (I)31.0 (E)28.0, Carb. No. & Type: (2) Auto-type sidedraft w/ 32mm choke(s) on I.R. manifold, or fuel injection, Wheelbase(mm): 2550, Track (F/R)(mm): 1567/1567, Wheels(max): 15 x 7, Trans. Speeds: 5, Brakes Std.(mm): (F)242 Disc (R)239 Disc, Notes: Comp. Ratio limited to 11.0:1, Valve lift limited to .450".

2. Lotus Super 7, p. 438-439, change the specs to read as follows: Carb. No. & Type: (2) Weber DCOE on I.R. manifold w/ 34mm choke(s).
3. Suzuki Swift GT & GTi, p. 442-443, correct the specs as follows: Displ.(cc): 1299, change the specs to read as follows: Carb. No. & Type: (1) 40 DCOE, (2) auto type side draft on I.R. manifold, 32mm choke(s) required, or fuel injection, alternate 52mm throttle body allowed.
4. Toyota Corolla 2TC (71-74), p. 442-443, add to the specs as follows: Brakes Alt.(in): (F) 10.0 Solid Disc, Rotors and Calipers from 73 Corona.
5. Volkswagen Rabbit (includes Convertible) 1715/1780, p. 444-445, change the specs to read as follows: Weight(lbs): 1950.
6. Volkswagen Scirocco 1457/1471, p. 444-445, correct the specs to read as follows: Brakes Std.(mm): (F)9.41 Disc (R)7.1 x 1.19 Drum, Brakes Alt.(mm): Front calipers from 1980 Scirocco/Rabbit.

HP

1. Austin-Healey Sprite Mk. I, II, III, IV, MG Midget Mk. I, II, III, IV (948), p. 454-455, change the specs to read as follows: Weight(lbs): 1550.
2. Austin-Healey Sprite Mk. I, II, III, IV, MG Midget Mk. I, II, III, IV, Midget 1500, p. 454-455, (1098cc level 1), change the specs to read as follows: Weight(lbs): 1740.
3. Classify the BMW 1600 (68-71) with Level 2 prep.

Add new spec line to PCS-B, p. 454-455, BMW 1600 (68-71), Prep. Level: 2, Weight(lbs): 2100 *2153 **2205, Engine Type: 4 Cyl SOHC, Bore x Stroke(mm): 84.0 x 71.0, Displ.(cc): 1574, Block Mat'l: Iron, Head Mat'l: Alum, Valves IN & EX(mm): (I)42.0 (E)35.0, Carb. No. & Type: Carburetion, Wheelbase(in): 98.4, Track (F/R)(in): 56.3 / 56.3, Wheels(max): 13 x 6, Trans. Speeds: 4, Brakes Std.(mm): (F)257 Disc (R)232 Drum, Notes: Comp. Ratio limited to 11.0:1, Valve lift limited to .450". Factory 2bbl intake manifold from EP BMW 2002 is permitted.

4. Classify the Toyota Corolla (71-74) with Level 2 prep.

Add new spec line to PCS-B, p, 460-461, Toyota Corolla (71-74), Prep. Level: 2, Weight(lbs): 1960 *2009 **2058, Engine Type: 4 Cyl OHV, Bore x Stroke(mm): 85.0 x 70.0, Displ.(cc): 1588, Block Mat'l: Iron, Head Mat'l: Alum, Valves IN & EX(mm): (I)41.0 (E)36.0, Carb. No. & Type: (1) 40 DCN, DCNF, IDF, (2) auto type side draft w/ 32mm choke(s) on I.R. manifold, Wheelbase(in): 91.9, Track (F/R)(in): 54.5 / 55.5, Wheels(max): 13 x 7, Trans. Speeds: 4, Brakes Std.(mm): (F)229 Disc (R)231 Drum, Notes: Comp. Ratio limited to 12.0:1, Valve lift limited to .450".

5. Triumph Spitfire, p. 460-461, change the specs to read as follows: Weight(lbs): 1665 *1707 **1748.
6. Classify the Triumph Spitfire in HP with Level 1 suspension prep and Level 2 engine prep.

Add new spec line to PCS-B, p. 460-461, Triumph Spitfire, Prep. Level 1/2 See Notes, Weight(lbs): 1810, Engine Type: 4 Cyl OHV, Bore x Stroke(in): 2.90 x 2.992, Displ.(cc): 1296, Block Mat'l: Iron, Head Mat'l: Iron, Valves IN & EX(in): (I)1.30 (E)1.17, Carb. No. & Type: Carburetion, Wheelbase(in): 83.0, Track (F&R)(in): 53.6 / 52.6, Wheels(max): 13 x 6, Trans. Speeds: 4, Brakes Std.(in): (F)9.0 Disc (R)7.0 Drum, Brakes Alt.(in): (F) 9.7 Disc (R)8.0 Drum, May use Triumph GT6 caliper as alternate font caliper, Notes: Comp. Ratio limited to 11.0:1, Valve lift limited to .450". Drivetrain Level 2 preparation only. Listed spec line weight does not change with alternate or stock transmission. Battery tray may be removed.

7. Triumph Spitfire 1500, p. 460-461, add to the specs as follows: Notes: Alternate intake manifold, Pierce #J15-1952 allowed.

American Sedan

1. As approved by the BoD in this FasTrack; change section 9.1.6.D.1.j, p. 467-468, to read as follows: ~~Engines may be bored to a maximum of .040" over standard bore size.~~ Engine block shall be cast iron as produced by the manufacturer for the specified displacement of the cars classified but shall not be restricted to the models or years listed. See Section F – Engine Build Sheets for additional specifications

   1. Any aluminum replacement ~~dished or flat top (with valve relief's)~~ piston with three piston rings ~~and a stock diameter piston pin~~ may be used. See Section F – Engine Build Sheets for additional specifications
   2. Piston rings are unrestricted.
   3. Stock or alternate factory OEM connecting rods are permitted. Alternate factory OEM replacement rods shall be available from the vehicle manufacturer as direct replacement OEM-type substitutes. ~~Specifically approved aftermarket connecting rods are permitted.~~ See Section F – Engine Build Sheets for additional specifications.

2. Clarify section 9.1.6.D.7.d, p. 474, by adding to the end as follows: *Stock hood hinges may be removed, modified, or replaced.*
3. As approved by the BoD in this FasTrack; change section 9.1.6.D.9.e, p. 475, to read as follows: *The steering column is unrestricted. A collapsible type steering column is strongly recommended. The driver's normal seated position must not be relocated.* ~~Steering knuckle flexible coupling may be replaced with steel universal joint.~~
4. As approved by the BoD in this FasTrack; change section 9.1.6.F, p. 476-481, to read as follows:

~~Chevrolet / Pontiac~~

~~GENERAL~~

~~**Manufacturer:** General Motors Corp.~~

~~**Model/Year:** Camaro/Firebird 1982-92 (Includes 1993 Camaro/Firebird and 04-06 GTO prepared to SCCA American Sedan specifications)~~

~~**L / (CID):** 5.0L / (305 CID)~~

No. of Cylinders: V-8

Bore ~~(Range)~~ ***Max*:** ~~3.7400-3.7800"~~ *4.040"*

Stroke *Max*: ~~3.4750-3.4800"~~ *3.500"*

~~**Firing Order:** 1-8-4-3-6-5-7-2~~

Compression Ratio: 10.30 Max.

Piston to Deck Clr: Not to exceed ~~0.000"~~ *0.013"* above block deck surface (zero deck)

Valve Lift: ~~0.4800"~~ *0.5000"* Max. @ 0.0000" lash

Block ~~**Casting #'s:** 14010201, 14010202, 14010203, 14010231, 14016381, 10164548, 11068561, 14088551, 14093627, 14094766, 14093627, 14094766, 10049047, 14102058, 14016383, 355909, 361979, 460776, 460777, 460778, 10243878~~ *Any General Motors or Ford produced ferrous block meeting other AS required specifications.*

Head Casting #'s: ~~14101081, 14014416~~ *See Spec Line*

Crankshaft Casting #'s: *GM:* 3932442, 14088526, 14088835, 566607
Ford: 2M, 2MA, 2MAB, 2MAC, 2MAD, 2MAE, E1AE-AA, E7AE-AA

Notes:

1. Any commercially available steel crankshaft which meets approved stroke, journal diameters and other specified dimensions and requirements is permitted. The minimum weight for any steel crankshaft shall be ~~48#~~ *42 lbs.*
2. Crankshaft casting seam flash may be deburred.
3. Steel main bearing caps may be fitted provided no other modifications are made to any approved part or specified dimension.

BLOCK

Crankshaft Housing Bore: ~~2.6406-2.6416"~~ *2.4412"-2.6416"*

Block Deck Height: ~~9.0070-9.0430"~~
GM: 9.0070-9.0430"
Ford: 8.1880-8.2240"

Bore Spacing:
GM: 4.4000"
Ford: 4.3800"

~~**Lifter Bore:** 0.8430-0.8450" (Lifter bore sleeving is permitted – 2 lifter bores maximum.)~~

Options:

1. One-piece rear main seal adapter (with seal) may be used.
2. Cylinder block oil restrictors may be installed.
3. Block may be machined for the purpose of installing cylinder O-rings.
4. Block may be machined to true warped surfaces
5. Block casting seam flash may be deburred.
6. *Lifter bore sleeving is permitted.*

CONNECTING RODS

Big End Bore: ~~2.2247-2.2252"~~ *2.2247-2.2398"*

Pin Fit: Floating or Interference Fit

Center to Center: ~~5.6985-5.7015"~~ *Max 6.00"*

Material: Forged Steel / Cast Iron (No Billet)

Alternate Manufacture: *Any rod meeting the AS specs is permitted.*

Options:

1. Wrist pin oiling holes may be added.

CAMSHAFT

Drive Type: Single or Dual-row chain

Lifter Type: Solid, flat-tappet

Lifter Dia: ~~.8420" nominal~~ *.8750" Max*

Options:

1. Camshaft thrust button may be installed

CRANKSHAFT

Main Journal Dia ~~**(Range):**2.4183-2.4493"(1-4), 2.4178-2.4488" (5)~~ *Min: 2.2182"*

Rod Journal Dia ~~**(Range):** 2.0690-2.1000"~~ *Min 2.0690"*

Options:

1. Crankshaft casting seam flash may be deburred.

PISTON

Material: Aluminum (Cast or Forged)

Ring Configuration: 3 rings, above pin

Dome Configuration: ~~Flat top max. (dished piston dome permitted)~~ *Any dome configuration is permitted.*

Pin Diameter: ~~.927" nominal~~ *Max: .930"*

Options:

1. Pins may be centered or offset. Offset shall not exceed factory specifications.

CYLINDER HEADS

~~**Valve Job (Head):** (Refer to Drawing 1)~~

~~**Valve Job (Valve):** (Refer to Drawing 2)~~

Intake Valve Size: ~~1.8350-1.8400"~~ *Max: 1.94"*

Exhaust Valve Size: ~~1.4950-1.5000"~~ *Max: 1.54"*

Valve Stem Diameter: ~~(Refer to Drawing 2)~~ *Minimum stock stem diameter shall be maintained for at least 70% of the overall valve length (measured from stem tip).*

Port Volume (Max.): ~~081 casting: 170.00cc IN / 65.00cc EX~~ *See spec line.*

~~**416 casting:** 168.00cc IN / 60.00cc EX~~

Options:

1. Angle milling permitted on head gasket or intake manifold gasket surface(s) only. Modification or machining of exhaust manifold surfaces of cylinder head is prohibited.
2. Intake manifold surface may be milled to match angle milled head.
3. Heads may be machined to accept pushrod guide plates.
4. Heads may be machined to accept screw-in rocker studs.
5. Heads may be machined to for the purpose of installing integral o-ring head gaskets.
6. Heat riser passage may be blocked from intake manifold side of cylinder head only.
7. Valve spring pockets may be machined.

Notes:

1. Absolutely no modification, machining, tooling, etc. of the combustion chambers is permitted.

MISCELLANEOUS

1. Direct replacement high volume/pressure oil pumps may be fitted provided that no modification to the engine is required for their installation. Alternate oil pump drive shafts may be fitted.

~~**Ford / Mercury**~~

~~GENERAL~~

~~**Manufacturer:** Ford Motor Company~~

~~**Model/Year:** Mustang 1979-95 (Includes 1996 Mustang prepared to SCCA American Sedan specifications), Mercury Capri 1979-86~~

~~**L / (CID):** 5.0L / (302 CID)~~

~~**No. of Cylinders:** V-8~~

~~**Bore (Range):** 4.0000-4.0400"~~

~~**Stroke:** 2.9950-3.0000"~~

~~**Firing Order:** 1-3-7-2-6-5-4-8 or 1-5-4-2-6-3-7-8~~

~~**Compression Ratio:** 10.30 Max.~~

~~**Piston to Deck Clr:** Not to exceed 0.013" above block deck surface~~

~~**Valve Lift:** 0.5000" Max. @ 0.0000" lash~~

~~**Block Casting #'s:** Any D, E, or F Ford Windsor 302 block casting with 2-bolt main bearing caps.~~

~~**Head Casting #'s:** F3ZE-AA (GT40), F1ZE-AA (GT40), F77E-AA (GT40-P)~~

~~**NOTE:** All other legal Ford (Non GT-40) head castings (w/ 1.780" IN & 1.450" EX valve sizes) may be used. No additional preparation is permitted and no consideration will be given to lack of competitiveness in comparison to the GT-40/GT-40P cylinder heads.~~

~~**Crankshaft Casting #'s:** 2M, 2MA, 2MAB, 2MAC, 2MAD, 2MAE, E1AE-AA, E7AE-AA~~

~~**Notes:**~~

~~1. Ford Motorsport block number M-6010-B50 is permitted.~~

~~2. Any commercially available steel crankshaft which meets approved stroke, journal diameters and other specified dimensions and requirements is permitted. The minimum weight for any steel crankshaft shall be 42#.~~

~~3. Crankshaft casting seam flash may be deburred.~~

~~BLOCK~~

~~**Crankshaft Housing Bore:** 2.4412-2.4420"~~

~~**Block Deck Height:** 8.1880-8.2240"~~

~~**Bore Spacing:** 4.3800"~~
~~**Lifter Bore:** 0.8730-0.8750" (Lifter bore sleeving is permitted – 2 lifter bores maximum.)~~
~~**Options:**~~

1. ~~Cylinder block oil restrictors may be installed.~~
2. ~~Block may be machined for the purpose of installing cylinder O-rings.~~
3. ~~Block may be machined to true warped surfaces~~
4. ~~Block casting seam flash may be deburred.~~

~~**CONNECTING RODS**~~
~~**Big End Bore:** 2.2390-2.2398"~~
~~**Pin Fit:** Floating or Interference Fit~~
~~**Center to Center:** 5.0885-5.0915"~~
~~**Material:** Forged Steel / Cast Iron (No Billet)~~
~~**Alternate Manufacture:** *Any rod meeting the AS specs is permitted.*~~
~~**Options:**~~

1. ~~Wrist pin oiling holes may be added.~~

~~**CAMSHAFT**~~
~~**Drive Type:** Single or Dual row chain~~
~~**Lifter Type:** Solid, flat tappet~~
~~**Lifter Dia:** .8740" nominal~~

~~**CRANKSHAFT**~~
~~**Main Journal Dia (Range):** 2.2182-2.2490"~~
~~**Rod Journal Dia (Range):** 2.0928-2.1236"~~
~~**Options:**~~

1. ~~Crankshaft casting seam flash may be deburred.~~

~~**PISTON**~~
~~**Material:** Aluminum (Cast or Forged)~~
~~**Ring Configuration:** 3 rings, above pin~~
~~**Dome Configuration:** Flat top max. (dished piston dome permitted)~~
~~**Pin Diameter:** .912" nominal~~
~~**Options:**~~

1. ~~Pins may be centered or offset. Offset shall not exceed factory specifications.~~

~~**CYLINDER HEADS**~~
~~**Valve Job (Head):** (Refer to Drawing 1)~~
~~**Valve Job (Valve):** (Refer to Drawing 2)~~
~~**Intake Valve Size:** 1.8350-1.8400" (GT40 & GT40 P), 1.775-1.780" (non GT 40)~~
~~**Exhaust Valve Size:** 1.5350-1.5400" (GT40), 1.4450-1.4500" (GT40 P & non GT40)~~
~~**Valve Stem Diameter:** (Refer to Drawing 2)~~
~~**Port Volume (Max.):** 143.0cc IN / 54.0cc EX (GT 40 & GT 40P)~~
~~**Options:**~~

1. ~~Angle milling permitted on head gasket and/or intake manifold gasket surface(s) only. Modification or machining of exhaust manifold surfaces of cylinder head is prohibited.~~
2. ~~Intake manifold surface may be milled to match angle milled head.~~
3. ~~Heads may be machined to accept pushrod guide plates.~~
4. ~~Heads may be machined to accept screw-in rocker studs.~~
5. ~~Heads may be machined to for the purpose of installing integral o-ring head gaskets.~~
6. ~~Heat riser passage may be blocked from intake manifold side of cylinder head only.~~

~~**Notes:**~~

1. ~~Absolutely no modification, machining, tooling, etc. of the combustion chambers is permitted.~~

~~**MISCELLANEOUS**~~

1. ~~Direct replacement high volume/pressure oil pumps may be fitted provided that no modification to the engine is required for their installation. Alternate oil pump drive shafts may be fitted.~~

FIGURE 1

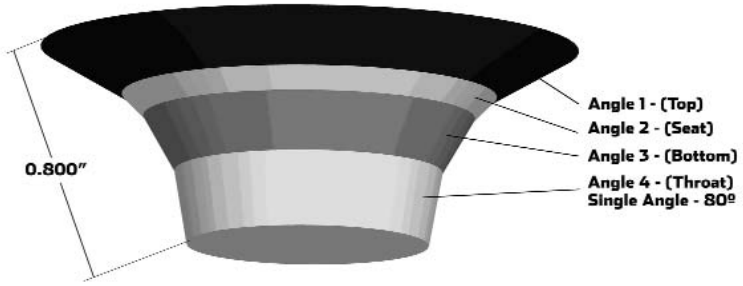

5. As approved by the BoD in this FasTrack; the ASCS spec lines, p. 482, with the following:

Note: the weights have been adjusted from what was previously published; these are the official weights for 2008.

AS	Wheel-base (inch)	Gear Ratios (Std.)	Gear Ratios (alt.)	Gear Ratios (alt.)	Brakes (Max) (mm)	Weight (lbs)	Notes:
Camaro & Firebird (82-92)	101.0	3.42, 2.28, 1.45, 1.00	2.95, 1.94, 1.34, 1.00, 0.73	3.35, 1.93, 1.29, 1.00, 0.61	12.2 x 1.25 Disc	3280 Over 313 Cubic inch Displacement 3580	Dana 44 axle permitted. Harwood fiberglass hood (P/N 12100) is permitted. Engine built to A/S Build Sheet specifications with the following: Head Casting #'s: 14101081, 14014416 Port Volume (Max.): 081 casting: 170.00 cc in/ 65.00 EX; 416 Casting 168.00cc IN /60.00 EX cc
Camaro & Firebird (93-02)	101.1	2.95, 1.94, 1.34, 1.00, 0.73	3.35, 1.93, 1.29, 1.00, 0.61		12.2 x 1.25 Disc	3280 Over 313 Cubic inch Displacement 3580	Dana 44 axle permitted. Alt Hood: American Sports Car Design, Inc. (Part # S-400) w/rear opening closed. Right side wiper mechanism may be removed and underside of cowl may be modified to facilitate carb installation. P/S bracket may be modified or replaced to accomodate the P/S pump. The cowl and shock tower sheet metal may be modified to allow the installation of an 82-92 F-body brake booster and master cylinder. Camaro SS hood from SLP or SVD is permitted with ram air opening sealed to prevent the passage of air. Engine/transmission installation procedure as provided by SCCA Club Racing shall be utilized. WS6 hood is permitted with ram air opening sealed to prevent the passage of air. Engine built to A/S Build Sheet specifications with the following: Head Casting #'s: 14101081, 14014416 Port Volume (Max.): 081 casting: 170.00 cc in/ 65.00 EX; 416 Casting 168.00cc IN /60.00 EX cc
Mustang Incl. Cobra & Cobra R (79-93)	100.4	3.07, 1.72, 1.00, 0.70	2.95, 1.94, 1.34, 1.00, 0.63	3.35, 1.99, 1.33, 1.00, 0.68	12.2 x 1.25 Disc	3080 Over 313 Cubic inch Displacement 3580	Permitted: Rear disc brake kit (M-2300-C) and/or 5-lug kit (M-2300-F). Engine built to A/S Build Sheet specifications with the following: Head Casting #'s: F3ZE-AA (GT40), F1ZE-AA (GT-40), F77E-AA (GT-40P) Port Volume (Max.): 143.00cc IN/ 54.00cc EX (GT-40 & GT-40P)
Mustang Incl. Cobra thru 95 (94-98)	101.3	2.95, 1.94, 1.34, 1.00, 0.63	3.35, 1.99, 1.33, 1.00, 0.68		12.2 x 1.25 Disc	3280 Over 313 Cubic inch Displacement 3580	Cobra R hood (F5ZV-16612-AA) is permitted with rear opening closed off. Hydro boost braking system is not permitted. Any 1994, and up, Mustang vacuum assisted braking system shall be used. Engine built to A/S Build Sheet specifications with the following: Head Casting #'s: F3ZE-AA (GT40), F1ZE-AA (GT-40), F77E-AA (GT-40P) Port Volume (Max.): 143.00cc IN/ 54.00cc EX (GT-40 & GT-40P)
Mustang Incl. Cobra (99-04)	101.3	2.95, 1.94, 1.34, 1.00, 0.63	3.35, 1.99, 1.33, 1.00, 0.68		12.2 x 1.25 Disc	3280 Over 313 Cubic inch Displacement 3580	Cobra R bodywork and independent rear suspension not permitted. '94-'95 Mustang K-mamber may be used to facilitate installation of 302 engine. Under no circumstances is the '99-'00 K-member to be modified. Hydro boost braking system is not permitted. Any 1994, and up, Mustang vacuum assisted braking system shall be used. Engine built to A/S Build Sheet specifications with the following: Head Casting #'s: F3ZE-AA (GT40), F1ZE-AA (GT-40), F77E-AA (GT-40P) Port Volume (Max.): 143.00cc IN/ 54.00cc EX (GT-40 & GT-40P)
Mustang GT (2005)	107.1	3.38, 2.00, 1.32, 1.00, .675	2.95, 1.94, 1.34, 1.00, 0.63		12.2 x 1.25 Disc	3280 Over 313 Cubic inch Displacement 3580	Engine/transmission installation procedure as provided by SCCA Club Racing shall be utilized. Engine built to A/S Build Sheet specifications with the following: Head Casting #'s: F3ZE-AA (GT40), F1ZE-AA (GT-40), F77E-AA (GT-40P) Port Volume (Max.): 143.00cc IN/ 54.00cc EX (GT-40 & GT-40P)
Capri (79-86)	100.4	3.07, 1.72, 1.00, 0.70	2.95, 1.94, 1.34, 1.00, 0.63	3.35, 1.99, 1.33, 1.00, 0.68	12.2 x 1.25 Disc	3080 Over 313 Cubic inch Displacement 3580	Permitted: Rear disc brake kit (M-2300-C) and/or 5-lug kit (M-2300-F). Engine built to A/S Build Sheet specifications with the following: Head Casting #'s: F3ZE-AA (GT40), F1ZE-AA (GT-40), F77E-AA (GT-40P) Port Volume (Max.): 143.00cc IN/ 54.00cc EX (GT-40 & GT-40P)
GTO (04-06)	109.8	2.95, 1.94, 1.34, 1.00, 0.73	3.35, 1.93, 1.29, 1.00, 0.61		12.2 x 1.25 Disc	3480 Over 313 Cubic inch Displacement 3680	Engine/Transmission installation procedure as provided by SCCA Club Racing shall be utilized (TBD). Production IRS allowed w/ a maximum camber of -0.5° at static ride height. Engine built to A/S Build Sheet specifications with the following: Head Casting #'s: 14101081, 14014416 Port Volume (Max.): 081 casting: 170.00 cc in/ 65.00 EX; 416 Casting 168.00cc IN /60.00 EX cc

Showroom Stock

1. As approved by the BoD in this FasTrack; change section 9.1.7.E.28, p. 488, by deleting the section in its entirety: ~~Vehicles previously classified with performance kits may continue to compete with these kits. No new performance kits will be classified.~~
2. As approved by the BoD in this FasTrack; change the second paragraph of section 9.1.7.B, p. 484, by deleting the fifth sentence as follows: ~~Cars that are five (5) calendar years older than the current competition year shall not be eligible for positive competition adjustments.~~

SSB

1. BMW Z4 2.5L (03-05), p. 490, change the specs to read as follows: Weight(lbs): 3125. Delete the last two sentences of the Notes as follows: ~~Required ballast: 100 lbs. (Car/driver must meet minimum weight with the required ballast).~~
2. Mazda MX-5 (2007), p. 492, add the 08 model year, add to the specs as follows: Wheel Size(in) / Mat'l: 17 x 7, Trans Speeds: 3.82, 2.26, 1.64, 1.18, 1.00, 0.83, Weight(lbs): 2780, Notes: MS-R option permitted.
3. Pontiac Solstice (06-07), p. 493, add the 08 model year.

SSC

1. Classify the Chevrolet Cobalt Sport in SSC.

Add new spec line to SSCS, p. 494, Chevrolet Cobalt Sport (2008), Bore x Stroke(mm) / Displ.(cc): 88.0 x 98.0 / 2384, Wheelbase(mm): 2628, Track F&R(mm): 1492 / 1475, Wheel Size(in)/Mat'l: 17 x 7 Alum, Tire Size(stock): 205/50, Gear Ratios: 3.58, 2.02, 1.35, 0.98. 0.69, Final Drive: 3.84, Brakes(mm): (F)296 Vented Disc (R)270 Solid Disc, Weight(lbs): 3100.

2. Classify the Honda Accord Coupe LS-X (08) in SSC.

Add new spec line to SSCS, p. 495, Honda Accord LS-X (08), Bore x Stroke(mm) / Displ.(cc): 87.0 x 99.0 / 2354, Wheelbase(mm): 2741, Track F & R(mm): 1580 / 1580, Wheel Size(in) / Mat'l: 17 x 7.5 / Alum, Tire Size(stock): 225/50, Gear Ratios: 3.27, 1.78, 1.15, 0.87, 0.65, Final Drive: 4.39, Brakes(mm): (F)282 Vented Disc (R)282 Solid Disc, Weight(lbs): 3300.

3. Mazda3 s (04-07), p 495, add the 08 model year.
4. Classify the Pontiac G5 GT in SSC.

Add new spec line to SSCS, p. 496, Pontiac G5 GT (2008), Bore x Stroke(mm) / Displ.(cc): 88.0 x 98.0 / 2384, Wheelbase(mm): 2628, Track F&R(mm): 1492 / 1475, Wheel Size(in)/Mat'l: 17 x 7 Alum, Tire Size(stock): 205/50, Gear Ratios: 3.58, 2.02, 1.35, 0.98. 0.69, Final Drive: 3.84, Brakes(mm): (F)296 Vented Disc (R)270 Solid Disc, Weight(lbs): 3100.

Spec Miata

1. As approved by the BoD in this FasTrack; change the second paragraph on section 9.1.8.C.4.b, p. 505, to read as follows: 1999-up cars shall use the bump stops from the Mazdaspeed kit (p/n 0000-04-5993-AW) in conjunction with the 1999-up stock upper mount assembly consisting of the upper mount (p/n: NC10-28-340C), the upper mount bushing (p/n: NC10-28-776) and the upper mount washer (p/n: NC10-28-774), *and shock body spacer over the shock shaft (p/n 1234-56-789-AW).* All other OEM upper mounting hardware shall be discarded. *1990-1997 cars may use the bump stops from the Mazdaspeed kit (p/n 0000-04-5993-AW) in conjunction with the 1999-up stock upper mount assembly consisting of the upper mount (p/n: NC10-28-340C), the lower mount bushing (p/n: NC10-28-776) and the upper mount washer (p/n: NC10-28-774). Non-OEM equivalents may be used in place of the upper mount, upper mount bushing, and upper mount washer only. No other modifications are allowed.*

Sports Racing

CSR

1. Change section 9.1.9.G.13.a., b., c., p. 559, as follows:

~~a. A competitor shall start the race on the same set of tires (meaning the original four) as used in a qualifying session for the race. The only exception is rain tires. It is the responsibility of the competitor to ensure their tires are marked appropriately for qualifying and race sessions. It is recommended that regions offer these services at a central location such as pre grid or Tech.~~

~~b. A change of tires during or between a qualifying and race session shall automatically result in all previous times being disallowed.~~

~~c. If a tire is damaged during a qualifying session the competitor may replace that tire with a used tire upon approval of the Chief Steward. Should a tire be replaced for any reason, the competitor shall forfeit his grid position and start at the back of the grid.~~

a. A competitor shall start the race on tires used in a qualifying session for the race as identified by markings made on the tires by a race official. It is the responsibility of the competitor to ensure that his or her tires are appropriately marked prior to (e.g. on the false grid), during, or immediately after (e.g. as the car leaves the track) a qualifying session.

b. For races with more than one qualifying session, a competitor shall start the race on any marked tires from any qualifying session for the race.

c. If a competitor chooses to start the race on any tires that were not used in a qualifying session for the race and not appropriately marked, the competitor shall forfeit his or her grid position and start from the back of the grid. This forfeiture of grid position shall not apply if all qualifying sessions for the race were run under rain or wet conditions.

d. A complete set of four (4) rain or wet track tires may be used at the competitor's discretion for any race. Rain tires may be in new or used condition and require no special marking if used as a complete set of four.

2. Change section 9.1.9.G.15, p. 560, to read as follows: The car shall weigh *1350* ~~1365~~ lbs. minimum, including the driver.

Touring

1. As approved by the BoD in this FasTrack, change section 9.1.10.C.4.b, p. 567, by deleting the second sentence as follows: ~~Cars that are five (5) calendar years older than the current competition year shall not be eligible for positive competition adjustments.~~

T1

1. Classify the Chevrolet Corvette Coupe (2008) in T1.

Add new spec line to TCS, p. 575, Chevrolet Corvette Coupe C6 (2008), Bore x Stroke(mm) / Displ.(cc): 103.26 x 92.0 / 6162, Wheelbase(mm): 2685, Wheel Size(in): (F)18 x 10 (R)19 x 11, Tire Size: (F)245/40 (R)285/35, or 315/35 max (F&R), Rear tires may protrude up to 1.0" with GM T1 Perf. Susp. pkg. Max. camber: (F) -3.5 (R) -2.5 with GM suspension pkg., Gear Ratios: 2.66, 1.78, 1.30, 1.00, 0.74, 0.50, or 2.97, 2.07, 1.43, 1.00, 0.71, 0.57, Final Drive: 3.42, Brakes(mm): (F)325/340 Vented Disc (R)305/330 Vented Disc, Weight(lbs): 3530, , Notes: C6 T1 Suspension kit and Z51 option allowed. Floor may be modified to facilitate installation of cage mounting plates. This max. tire supersedes TCS 9.1.10.D.7.b. Removable roof panel shall be installed. The following parts are allowed: Ron Davis Radiator, part #1-16CV0500, Fan shroud Phoenix part # 1005422, Canton Accusump part # CA24006 or # CA24024, along with Electric solenoid W/ epc # CA24273, Accusump Check Valve # CA2428, and Wheel to Wheel Adapter block # 0760-50001, and related hoses and mounting brackets, GM trans. cooler part # 12480080 and B&M differential cooler part #70298, Doug Rippie Motorsports brake duct kit # 12-101, 180 degree thermostat Hypertech # 1015, Earls oil cooler part # 619 Setrab (19 row), HD oil pressure shim Phoenix part # 1005421, Brake duct holder kit Phoenix #C6BBDH001. Wrapping of tie-rod ends to shield heat is permitted. Trimming of the lower edge of the center of the air dam is allowed up to a depth of 3.9cm.

2. Classify the Saleen Parnelli Jones Mustang in T1.

Add new spec line to TCS, p. 577, Saleen Parnelli Jones Mustang (2007), Bore x Stroke(mm) / Displ.(cc): 90.2 x 90.0 / 4601, Wheelbase(mm): 2720, Wheel Size(in): 18 x 9.5, Tire Size: 275/40, Gear Ratios: 3.38, 2.00, 1.32, 1.00, 0.68, Final Drive: 3.73, 4.10, 4.30, Brakes(mm): (F)355 Vented Disc (R)330 Vented Disc, Weight(lbs): 3560.

3. Classify the Steeda Q335 Mustang in T1.

Add new spec line to TCS, p. 577, Steeda Q335 Mustang (2007), Bore x Stroke(mm) / Displ.(cc): 90.2 x 96.5 / 4931, Wheelbase(mm): 2720, Wheel Size(in): (F)19 x 9 (R)19 x 10, Tire Size: 285/35, Gear Ratios: 3.38, 2.00, 1.32, 1.00, 0.68, Final Drive: 3.73, Brakes(mm): (F)355 Vented Disc (R)300 Vented Disc, Weight(lbs): 3460.

T2

1. Classify the Acura TL Type S (07-08) in T2.

Add new spec line to TCS, p. 578, Acura TL Type S (07-08), Bore x Stroke(mm) / Displ.(cc): 89.0 x 93.0 / 3471, Wheelbase(mm): 2740, Wheel Size(in): 17 x 8, Tire Size: 235/45, Gear Ratios: 3.93, 2.48, 1.70, 1.25, 0.98, 0.77, Final Drive: 3.29, Brakes(mm): (F)310 Vented Disc (R)282 Solid Disc, Weight(lbs): 3660.

2. Classify the Chevrolet Cobalt SS in T2.

Add new spec line to TCS, p. 580, Chevrolet Cobalt SS (2008), Bore x Stroke(mm) / Displ.(cc): 85.3 x 86.1 / 1998, Wheelbase(mm): 2628, Wheel Size(in): 18 x 7.5, Tire Size: 225/40, Gear Ratios: 3.38, 1.76, 1.18, 0.89, 0.70, Final Drive: 3.82, Brakes(mm): (F)315 Vented Disc (R)292 Vented Disc, Weight(lbs): 3200.

3. Classify the Chevrolet HHR SS in T2.

Add new spec line to TCS, p. 580, Chevrolet Cobalt SS (2008), Bore x Stroke(mm) / Displ.(cc): 85.3 x 86.1 / 1998, Wheelbase(mm): 2631, Wheel Size(in): 18 x 7.5, Tire Size: 225/45, Gear Ratios: 3.38, 1.76, 1.18, 0.89, 0.70, Final Drive: 4.05, Brakes(mm): (F)315 Vented Disc (R)270 Solid Disc, Weight(lbs): 3200.

4. Lotus Elise (2005), p. 581, change the specs to read as follows: Weight(lbs): 2190.
5. Lotus Exige (06-07), p. 581, change the specs to read as follows: Weight(lbs): 2190.
6. Pontiac Solstice GXP (2007), p. 582, add the 08 model year, change the specs to read as follows: Weight(lbs): 3150.

T3

1. Chevrolet Cobalt SS (05-07), p. 583, change the Notes to read as follows: The following GM parts are allowed: front springs part # CCS635, rear springs # CCS639, front control arms # CCS636 and CCS637, ~~aftercooler radiator and pump # CCS640 and CCS642, pulley # 17803229,~~ shrouding kit # CCS644. Griffin radiator # 9D-18194-01 allowed. ~~Fuel injectors offered with alt. pulley not allowed, stock injectors must be utilized.~~
2. Honda S2000 (00-07), p. 583, add to the specs as follows: Tire Size: (R)245/40.
3. Classify the Honda S2000 CR in T3.

Add new spec line to TCS, p. 583, Honda S2000 CR (2008), Bore x Stroke(mm) / Displ.(cc): 87.0 x 90.7 / 2157, Wheelbase(mm): 2400, Wheel Size(in): (F)17 x 7 (R)17 x 8.5, Tire Size: (F)215/45 (R)255/40, Gear Ratios: 3.13, 2.05, 1.48, 1.16, 0.94, 0.76, Final Drive: 4.10, Brakes(mm): (F)300 Vented Disc (R)283 Solid Disc, Weight(lbs): 3020.

4. Lexus IS300 (2005), p. 583, add the 02-04 model years.
5. Mazda RX-8 (04-07), p. 584, add the 08 model year, correct the radiator part number listed in the Notes as follows: #0000-01-8501.
6. Mini Cooper S (02-07), p. 584, correct the specs by changing the model years to (02-06).
7. Classify the Mini Cooper S in T3.

Add new spec line to TCS, p. 584, Mini Cooper S (07-08), Bore x Stroke(mm) / Displ.(cc): 77.0 x 85.8 / 1598, Wheelbase(mm): 2467, Wheel Size(in): 16 x 6.5, Tire Size: 195/55, Gear Ratios: 3.31, 2.13, 1.48, 1.14, 0.95, 0.82, Final Drive: 3.65, Brakes(mm): (F)294 Vented Disc (R)259 Solid Disc, Weight(lbs): 2830.

8. Saturn Ion Redline (04-07), p. 584, change the Notes to read as follows: The following GM parts are allowed: front springs part # CCS635, rear springs # CCS639, front control arms # CCS636 and CCS637, ~~aftercooler radiator and pump # CCS640 and CCS642, pulley # 17803229,~~ shrouding kit # CCS644. Griffin radiator # 9D-18194-01 allowed. ~~Fuel injectors offered with alt. pulley not allowed, stock injectors must be utilized.~~
9. Subaru Legacy GT Sedan/Wagon (04-06), p. 584, add the 07-08 model years.
10. Classify the Volkswagen GTI in T3.

Add new spec line to TCS, p. 585, Volkswagen GTI (06-08), Bore x Stroke(mm) / Displ.(cc): 82.5 x 92.8 / 1984, Wheelbase(mm): 2578, Wheel Size(in): 17 x 7, Tire Size: 225/45, Gear Ratios: DSG Trans: 3.46, 2.15, 1.46, 1.08, 1.10, 0.92, Final Drive: 4.10 – 3.14, Brakes(mm): (F)312 Vented Disc (R)286 Solid Disc, Weight(lbs): 3280, Notes: Restrictor TBD.

ST

1. Classify the Aston Martin V8 Vantage N24 in ST.

Add new spec line to TCS, p. 586, Aston Martin V8 Vantage N24 (2007), Bore x Stroke(mm) / Displ.(cc): 89.0 x 86.0 / 4280, Wheelbase(mm): 2600, Wheel Size(in): (F)18 x 10 (R)18 x 11, Tire Size: (F)250/50 (R)280/50, Gear Ratios: 3.15, 1.95, 1.22, 1.15, 0.94, 0.76, Final Drive: 3.91, Brakes(mm): 355 Vented Disc (R)330 Vented Disc, Weight(lbs): 2950.

2. Chevrolet Corvette C6 Z06 (06-07), p. 586, add the 08 model year.
3. Classify the Lotus Sport Exige Cup 255 in ST.

Add new spec line to TCS, p. 586, Lotus Sport Exige Cup 255 (2007), Bore x Stroke(mm) / Displ.(cc): 82.0 x 85.0 / 1796, Wheelbase(mm): 2300, Wheel Size(in): (F)16 x 6.5 (R)17 x 7.5, Tire Size: (F)195/50 (R)225/45, Gear Ratios: 3.12, 2.05, 1.48, 1.17, 0.92, 0.82, Brakes(mm): (F)308 Vented Disc (R)288 Vented Disc, Weight(lbs): 1800.

COURT OF APPEALS

JUDGMENT OF THE COURT OF APPEALS
Al Wicht vs. SOM, COA Ref. No. 07-28-SE
December 7, 2007

PRIOR PROCEEDINGS AND FACTS IN BRIEF
Following Race Group 4 at the October 20-21, 2007 Sebring Regional, BP car #03, driven by Al Wicht, was determined by Tech to be 11 pounds underweight. Mr. Wicht was disqualified by Assistant Chief Steward Robert Windisch using a Chief Steward's Action (CSA) for violation of GCR 9.1.4.2.A.3.f. Mr. Wicht protested the action. The Stewards of the Meet (SOM) Norman Esau, Sandy Jung, Morriss Holliday and Chairman Peter Magnuson met, reviewed evidence and denied Mr. Wicht's protest. Although the protest was denied, the SOM did not levy points against Mr. Wicht's license. Mr. Wicht is appealing the decision of the SOM.

DATES OF THE COURT
The National Court of Appeals (COA), Dick Templeton, Bob Horansky and Michael West, Chairman, met on November 15, November 29 and December 6, 2007, to hear the appeal, review the evidence and render a decision.

DOCUMENTS AND OTHER EVIDENCE RECEIVED AND REVIEWED
1. Letter of Appeal and related documents from Al Wicht received November 9, 2007.
2. Official Observer's Report and related documents.
3. Emails from Rick Henschel (Chief of Tech for the event) dated November 17, November 19 and November 20, 2007.
4. Email from Russ Smith (Chief Steward for the event) dated November 16, 2007.
5. Email from Jeremy Thoennes (SCCA Technical Services Manager) dated November 14, 2007.

FINDINGS
In his appeal, Mr. Wicht stated that his 1993 Ford Mustang 5.0 entered in B/Prepared was a World Challenge car and, according to the World Challenge rules, its weight was meant to be 2,900 pounds, not the 3,100 pounds as specified in the March 2007 *Fastrack*. To support his claim, Mr. Wicht submitted an email received from John Bauer (SCCA Technical Staff) in response to Mr. Wicht's request for clarification of the March *Fastrack*. Mr. Bauer's response stated "Rule change in Prepared allows **current** legal WC cars as raced".

The COA asked SCCA's Technical staff to clarify the World Challenge eligibility rules. Jeremy Thoennes responded via email to the Court of Appeals and cited 2.7.3. of the Pro Racing Rules which state that a vehicle is in full eligibility until the third year after the body style goes out of production and partial eligibility for an additional three years. Mr. Wicht's 1993 model Mustang was the last year of production for that body style. Thus the car was in full eligibility through the 1996 season and partial eligibility through the 1999 season. Accordingly, the 1993 Mustang is not a current World Challenge car.

Mr. Wicht finished third (and last in B/Prepared) at the event.

Documents received by the COA raised concern about the accuracy of the measurement:
1. The scales were not currently certified in accordance with GCR 5.9.4.C.2.
2. The weighing method used at this event was one axle at a time. The vehicle was weighed with the driver in the vehicle which is not in compliance with GCR 5.9.4.B. The GCR is specific that the driver shall be weighed separately whenever each axle is weighed independently.

Based on the above noted deficiencies, the COA determined that Mr. Wicht was denied full due process in determining that his vehicle was underweight and not in compliance with the GCR.

DECISION
The COA overturns the decision of the SOM and restores Mr. Wicht's finishing position. However, Mr. Wicht is advised that his 1993 Ford Mustang 5.0 is not a current World Challenge car. Accordingly, the car must meet the minimum weight as stated in the GCR for BP cars.

The COA also reminds stewards that all procedures must be in compliance with the GCR or Supplementary Regulations.

Mr. Wicht's appeal is well-founded and his appeal fee will be returned to him, less the administrative fee retained by the SCCA.

COURT OF APPEALS

Subject: Court of Appeals Procedures
From: The National Court of Appeals

The General Competition rules provide a means for an individual to appeal an action by Stewards of the Meeting (SOM) in which they are a named party. The SOM action will have been initiated at a Competition event sanctioned by the Club Racing Department of the SCCA. The following is an explanatory guide to the appeal process for reference only.

First, and most important, your letter of appeal must be sent within ten (10) days of the date you are notified of the decision of the SOM. The date of your appeal is determined by the U.S. Post Office cancel date on the envelope. You may also send your appeal by Express Mail, by fax, or by email. All appeals should be addressed to the Court of Appeals, c/o SCCA Club Racing. If you fax or email your appeal, include a Visa or MasterCard Account number for your appeal to be billed. Your ten (10)-day period normally starts with the weekend day you were informed by the SOM of their decision. However, if that decision is not made because, for example, components needed to be checked at an off-site location sometime after the event, the ten (10)-day period would start from the date the Chairman, SOM, advises you orally or in writing of the final decision. The Chairman will advise the National Office of the decision via the Observers Report or an addendum to that report.

Second, you need to state your "case" in writing at the same time that you advise the Court of Appeals of your intention to appeal. A letter stating you intend to appeal and "details to follow" is NOT an appeal under the rules contained in GCR Section 8.4. You will need to submit all materials you wish the Court to consider within the ten (10)-day period allowed by the GCR. You will normally not be contacted by the Court of Appeals for additional information. The Court presumes you have provided all the information you feel is important at the time you appeal. If you feel other individuals can provide information that could be beneficial to your case, it is your obligation to contact those individuals and see that the Court receives their statements within the time allowed. **Note:** Appeals affecting national points standings for events held within 31 days of the Runoffs© have a 48 hour appeal period.

Third, your rights to file an appeal do not contain any rights to be heard "in person" either by phone or at a Court of Appeals hearing. The Appeals Court is not established to simply hear the same things again that the SOM have already heard, but to: A. Review the process followed by the SOM to determine if all parties involved followed the GCR rules. B. Review any new information that was not available, or not known, which becomes available to you after the SOM hearing. C. Decide whether or not there is sufficient evidence presented to warrant changing the SOM decision.

Fourth, if you file an appeal in a case involving another person, such as a driver-to-driver protest involving an alleged violation of the GCR, you should be aware that the individual will receive notification of your appeal and be given a brief period to respond to the appeal. The Chief Steward and Chairman, SOM, are also notified. This procedure assists the Court in understanding all sides to the case.

Fifth, if appeals involving alleged violations of car preparation specifications, the Court will maintain confidentiality of all specifications to insure that a competitor does not learn preparation "secrets" of another competitor by filing a teardown protest or appeal. All materials distributed, as part of the appeals process, will have measurements, specifications, etc. deleted.

Sixth, videos are frequently part of the appeals process. The Court can only accept unedited videos. Video media or data files furnished by the SOM and/or you to the Court may be retained by SCCA as a permanent part of the record if the case goes to appeal.

Seventh, several Divisions have assigned Stewards to assist individuals in reviewing the appeals process so that you can proceed in the most effective manner. These individuals are listed in various Regional or Divisional publications. If you do not know who these individuals are in your Division, contact your Divisional Executive Steward to obtain this data.

SOLO EVENTS BOARD MINUTES

SEB MINUTES | *Nov. 28, 2007*

The Solo Events Board met by conference call November 28th. Attending were board members Jason Isley, Andy Hollis, Marcus Merideth, Steve Wynveen, and Tina Reeves. Also attending were Howard Duncan and Doug Gill of the National Staff and Kaye Fairer of the BOD. These minutes are presented in topical order rather than in the order of discussion.

Unless noted otherwise the effective date for all rule, class, and listing change proposals herein is 1/1/2009.

GENERAL

- The SEB has provided recommendations to the BOD regarding 2008 Divisional Solo Events Stewards, Divisional Solo Safety Stewards, and Safety Committee memberships. Openings remain, and members are invited to apply in writing to the SEB via the National Office, for the following positions: Divisional Solo Events Steward, Northeast Division; Divisional Solo Events Steward, Central Division.
- The following outgoing Stewards and Safety Committee members are thanked by the SEB for their service to the Club in these capacities:

  Glenn Duensing (SSC) Pete Hetman (DSES) Robbie Robinson (DSES)
- GH Sharp is thanked by the SEB for his years of service to the SAC.

STREET PREPARED CATEGORY

- Mike Shields and Kevin Wenzel were appointed to the SPAC by the SEB.
- Outgoing SPAC member Alan Kugler is thanked by the SEB for his contributions to the committee.
- The following class listing proposals are being submitted by the SPAC for member comment:

  Escort ZX-2: Move from D to F (ref 07-428)
  Corvette ZR-1 (C4): Move from A to B, on the same line as other C4s (ref 07-431)
  Toyota Corolla GT-S (AE86 chassis, '84-'87): Reclassify from D to F, on its own line (ref 07-399)
- The following rule change proposal is submitted for member comment: Insert after 15.10.K, and re-label subsequent sections accordingly:

  "15.10.l
  Engine cooling radiators may be replaced with alternate parts subject to the following restrictions:
  1) Radiator core dimensions (width, height, thickness) must be no smaller than the standard part.
  2) Radiator must mount to OE radiator mounts.
  3) Fluid capacity of radiator must be no less than fluid capacity of the standard part.
  Alternate radiators may serve no other purpose (e.g. to allow a cold air intake passage)."

PREPARED CATEGORY

- Bill Cutrer was appointed by the SEB to the PAC.
- The SEB wishes to thank Tracy Sandberg for his service to the Club as a PAC member.

STREET MODIFIED CATEGORY

- The SEB has appointed Michael Feldpusch as an additional member of the SMAC, and has approved Vic Sias as the new committee Chair. The Board thanks Andy McKee, who is continuing as a committee member, for his service as SMAC Chair. Other applicants continue to be under consideration.

MODIFIED CATEGORY

- The following rule change proposal has been submitted by the MAC and is published here for member comment: Add to section 18, "Modified Category" under "Safety Rules", as new subsection A.7.14: "An attenuation structure as stated in and mandated by GCR rule section 9.4.5.F. is not required in Solo Modified Category vehicles"

NOT RECOMMENDED

- Changes to supplemental class BP

TECH BULLETINS

1) Stock: Add to 13.9: "Additional battery tie-down(s) may be used to supplement the standard equipment in order to meet the requirements of 3.3.3.B.15. The added item(s) may serve no other purpose."

2) Street Prepared: The listing for the VW Golf/Jetta 16V in DSP should read "Golf & Jetta (16V)" (ref 07-011)

3) Street Prepared: The following new listings, effective immediately upon publication, have been recommended by the SPAC and approved by the SEB:

   VW Rabbit 2.5L 5-cyl (A5 '06+) FSP (ref 07-393)

Mazdaspeed 3 DSP

4) Street Prepared: Per the SPAC, the Ferrari F430 Scuderia is covered as an option package by the existing listing in ASP (ref 07-420)

5) Modified: Per the MAC, GCR rule section 9.4.5.F., regarding deformable crash structure in formula cars, does not apply in Solo.

ROADRALLY BOARD MINUTES

ROADRALLY BOARD MINUTES | *Dec. 3, 2007*

The *RoadRally* Board (RRB) met via conference call on Wednesday, October 3, 2007.

Attending were: Kevin Poirier, Chairman, Chuck Edwards, Secretary, members Rick Beattie, Tim Craft, and Lois Van Vleet. Also attending were Duck Allen, Board Liaison, Pego Mack, National Office, and Jim Wakemen, Jr.

Chairman Poirier called the meeting to order at 7:30 pm CST.

On motion duly made and seconded the November 2007 minutes were APPROVED.

Awards

Recipients for the Robert Ridges Award, the Divisional Achievement Award, and the Regional Achievement Award were selected. The awards will be announced at the National Convention in San Antonio, Texas in February.

2008 National Convention

The RRB reviewed the schedule for the convention and accepted volunteers for the various presentations.

RoadRally Rules

The RRRs for 2008 have been posted on the SCCA website.

Division RoadRally Stewards

Steward appointments have been posted and are on the SCCA website.

2008 United States Road Rally Championship

Oregon Region will host the event unless another qualified region comes forward. The date will likely be October 17, 18, and 19, 2008 but these dates are tentative.

Tim Craft Leaving the RRB

Tim Craft has served on the RRB since 2001. Tim has served tirelessly in promoting SCCA RoadRally and has done so enthusiastically and with a cheerful heart. The RRB and the entire SCCA RoadRally community will miss him in this role.

There being no further business and no objections, the meeting adjourned at 10:00 pm.

Next Meeting

7:30 PM CDT on Wednesday, January 2, 2008.

ROADRALLY BOARD MINUTES

ROADRALLY BOARD MINUTES | *Dec. 3, 2007*

The RallyCross Board met in conference call on December 10th, 2007. Members in attendance were Matt Nichols, Jason Woodruff, Tom Nelson, Mark Utecht, and Mark Walker (Chair). Others present were Pego Mack, Rally Manager

Old Business:
The RallyCross Safety Committee presented its report on incidents in the past month.

The Rules Committee is considering a number of issues but there are no recommendations at this time.

The RxB discussed the clarifications to section 7 of the rules. A number of inconsistencies have been corrected. The section will be republished as a clarification and included in the 2008 rulebook.

The 2007 National Convention was discussed. Members of the RxB were assigned to various presentations.

New Business:
The Robert Ridges award was discussed and voted on by the RxB.

The Best Regional and Best Divisional award decision has been tabled until further input has been received from the RallyCross Stewards.

The RxB discussed officer positions for 2008.

The meeting was adjourned at 10:00pm (Utecht/Nelson)

Respectfully Submitted
Mark E. Walker
Chairman, RxB

QUICK LINKS

The following items have been removed from regular inclusion in FasTrack News and can be found on SCCA's Web site at the following links:

CLUB RACING

Accredited Driver Licensing Schools: http://www.scca.com/contentpage.aspx?content=39

Forms: http://www.scca.com/contentpage.aspx?content=45

Technical Forms: http://www.scca.com/contentpage.aspx?content=74

Scrutineer's Forms: http://www.scca.com/contentpage.aspx?content=77

Vehicle Homologation Forms: http://www.scca.com/contentpage.aspx?content=79

General Competition Rules (GCR): http://www.scca.com/contentpage.aspx?content=44

SOLO

Forms: http://www.scca.com/contentpage.aspx?content=60

Rulebook: http://www.scca.com/contentpage.aspx?content=61

RALLY

Forms: http://www.scca.com/contentpage.aspx?content=49

Rulebook: http://www.scca.com/contentpage.aspx?content=50

SCCA NATIONAL CONVENTION

Event page: http://www.scca.com/event.aspx?hub=6&event=11083

Registration : http://www.scca.com/eventitems.aspx?item=276&event=11083&hub=6

EVENT CALENDAR: http://www.scca.com/events.aspx?hub=10

Fastrack news official SCCA member notification

EFFECTIVE FIRST DAY OF THE COVER MONTH UNLESS OTHERWISE NOTED February 2008

BOARD OF DIRECTORS MINUTES

BOARD OF DIRECTORS' MINUTES | SPORTS CAR CLUB OF AMERICA, INC. | *Jan. 7, 2008*

The Board of Directors, Sports Car Club of America, Inc. met via teleconference January 7, 2007. The following members participated: Bob Introne, Howard Allen, Jim Christian, Philip Creighton, Larry Dent, R. J. Gordy, Bob Lybarger, Lisa Noble, Andy Porterfield, John Sheridan, Mike Sauce, K.P. Jones and Jerry Wannarka. Jim Julow, President, and Jeff Dahnert, Vice President of Finance, also participated.

MOTION: To approve the minutes of the December 10, 2007 meeting. (Porterfield/Dent) PASSED, Unanimous

PRESIDENTS REPORT

Jim reported plans for the National Convention. He also indicated that SCCA Pro expects to finish 2007 in the black.

FINANCIAL REPORT

Jeff reported on the November financials. He indicated that SCCA Inc. will finish 2007 in the black.

NEW BUSINESS

The board discussed Formula First and took no action at this time, as the Board has not received a recommendation from the Club Racing Board.

MOTION: To approve Matt Rowe as Time Trials Committee Chairman. (Noble /Allen) PASSED, Unanimous

MOTION: To approve Guy Ruse as National Administrator for Licensing. (Christian/Allen) PASSED, Unanimous

MOTION: To appoint Jim Wakemen to the Road Rally Board. (Allen/Lybarger) PASSED, Unanimous

MOTION: To adjourn. (Christian/Allen)

Respectfully submitted,

Jim Christian
Secretary

CONTENTS

BOARD OF DIRECTORS	**1**
Board of Directors Minutes	1
CLUB RACING	**2**
CRB Minutes	2
Technical Bulletin	9
COURT OF APPEALS	**18**
SOLO	**19**
SEB Minutes	19
RALLY	**NONE**
QUICK LINKS	**21**

CLUB RACING BOARD MINUTES

CLUB RACING BOARD MINUTES | *Jan. 8, 2008*

The Club Racing Board met by teleconference on January 8, 2008. Participating were Bob Dowie, Chairman; Chris Albin, Stan Clayton, Dave Gomberg, Peter Keane, and Russ McHugh. Also participating were Bob Lybarger and Jerry Wannarka, BoD Liaisons; Terry Ozment, Vice President of Club Racing; Jeremy Thoennes, Technical Services Manager; John Bauer, Technical Assistant Club Racing; and Lauri Burkons, CRB Secretary.

In addition to those items covered in Technical Bulletin 07-02, the following decisions were made:

PROPOSED RULE CHANGES OR CAR RECLASSIFICATIONS

The following subjects will be referred to the Board of Directors for approval. Address all comments, both for and against, to the Club Racing Board. Comments may be e-mailed to crb@scca.com.

GCR

Item 1. Effective 11/1/08: Change section 5.10.3.B.4 as follows:

The driver information shall include: driver's full name, hometown, state, region of record, car number, *and* car make ~~and model, and car year as required per GCR~~. It is required that the competition license number be included in the driver information.

Item 2. Effective 11/1/08: Delete section 5.5.4.D in its entirety.

~~D. Equipment~~

~~Each corner station should be equipped with at least the following:~~

~~1. Device for communicating immediately, privately, and without interference with the Central Control Station, other corner stations, and other stations as appropriate.~~

~~2. The following flags or signaling paddles: Yellow (2), yellow and red striped, white, blue with a yellow stripe, black, and red.~~

~~3. One dry chemical type fire extinguisher of at least 20 pound size although two (2) 10 pound extinguishers are recommended.~~

~~4. Pry bar of sufficient length (4-5 feet).~~

~~5. Broom (push type).~~

~~6. Oil/gasoline absorbent material.~~

~~7. Blanket or fire sheet.~~

~~8. Vest or arm band to distinguish the Corner Captains.~~

~~9. Pair of Day-Glo orange re-entry gloves.~~

~~10. 20 foot length of half inch rope.~~

~~11. Flame/Heat resistant gloves.~~

~~12. Each black flag station shall additionally be equipped with black and mechanical black flags, plus a blackboard or other means of displaying simultaneously the affected car's number or the word "ALL."~~

Item 3. Effective 11/1/08: Change section 5.7 as follows:

5.7.1. Sound Control Chief

The Sound Control Chief shall be responsible for monitoring racing vehicles at sound-controlled events in accordance with the GCR ~~and the SCCA Sound Control Manual~~. Specifically, he or she shall:

A. ~~Review or establish~~ *Ensure that the* sound ~~meter~~ monitoring ~~location~~ *equipment is located at an official certified site*.

B. ~~Establish how~~ *Ensure that* reading~~(s)~~ shall be made *in accordance with the GCR*.

C. Advise the Chief Steward of the readings.

D. Submit post-race reports to the Chairman of the SOM.

E. Monitor weather and ambient conditions throughout the day.

F. Perform field calibration *of the equipment* in accordance with the GCR ~~Sound Control Manual for sound meter, microphone, or other instruments~~.

G. ~~Obtain~~ *Ensure that* yearly calibration of *the* equipment *has been performed by the* ~~from~~ manufacturer or ~~qualified~~ *a certified* laboratory.

5.7.2 General Procedures and Requirements

~~This Section shall establish SCCA test procedures, instrumentation, and environmental requirements for determination of race vehicle sound emissions.~~

Competitors carry sole responsibility to determine that their vehicles comply with Sound Control Regulations at each event. Mufflers may be required.

Sound Control will be in effect for all events. All cars will be monitored and readings will be posted for competitors' information. A driver registering a single sound level reading over ~~103dB~~ *the maximum for the event* shall not be black flagged. If a driver is black flagged due to sound, the car shall not re-enter the course until corrective steps are taken.

5.7.3 Standards

The primary standard for SCCA Sound Control shall be a sound pressure level of 103db "A" frequency weighted (dba) measured on the fast response setting at 50 feet (+/- 2 feet) from the edge of the track pavement, and/or artificial markers indicating track edge. *Lower maximum levels may be imposed at specific venues or events. These lower levels shall be noted in the Supplemental Regulations.* ~~Numbers~~ *All sound readings* shall be truncated to the lower whole number. (Anything after the decimal point is ignored.)

~~5.7.4. Equipment~~

~~A. A sound level instrument (meter) which meets American National Standards Institute (ANSI) Specification S1.4-1971, Class 2, Type S2A or better, and provides the following features:~~

~~1. Demountable microphone~~

~~2. Fast response (not peak)~~

~~3. "A" frequency (scale) weighting~~

~~4. Max. (maximum) hold~~

~~5. General accessories shall include:~~

~~a. Tripod~~

~~b. Microphone cable for remote operation, fifty (50) foot minimum~~

~~c. Operating Manual~~

~~d. Infield calibrator~~

~~B. Weather (meteorological instruments to support sound readings):~~

~~1. Barometer, capable of reading 0.1 inches of mercury (recommended).~~

~~2. Thermometer, accurate to +/- 1 degree Fahrenheit (wet bulb thermometer recommended).GCR - 40-5. Officials, Operating Procedures, Equipment~~

~~C. General equipment~~

~~1. Tape Measure, fifty (50) foot minimum~~

~~5.7.5. Measurements~~

~~The SCCA Sound Control criteria are a composite of Federal Standards and the Society of Automotive Engineers' specifications.~~

~~A. GENERAL~~

~~Proper location and use of all test instrumentation is essential to obtain valid measurements. Operating Manuals or other Manufacturer's literature should be referenced for both recommended operation and precautions to be observed.~~

~~B. TECHNIQUE~~

~~1. Acoustic calibration procedures should include extension cable influence.~~

~~2. Field calibration shall be done at least every four (4) hours while in the operating mode.~~

~~3. Weather conditions should be recorded every hour when conditions are unstable, or otherwise every two (2) hours.~~

~~5.7.6. Microphone Location~~

~~A. The microphone shall be:~~

~~1. 3.5 feet (minimum) above the ground surface.~~

~~2. 2.0 feet (minimum) above the level of the roadway.~~

~~3. No more than 6 feet above the level of the roadway.~~

~~4. Two hundred (200) feet or more away from any tunnel or overpass through which the target vehicle passes.~~

~~B. The microphone shall be mounted on a tripod, remote from the sound meter, using at least fifty (50) feet of cable.~~

~~C. Whenever possible it is recommended (but not mandatory) that the microphone shall be located on the outside of the track between race car and outside perimeter of the racing facility, aimed into infield areas.~~

Item 4. Effective 11/1/08: Change section 5.9.4.C.2 as follows:

Use at the track of ~~certification~~ *calibration* weights, ~~minimum 250 pounds~~ *totaling 100 pounds up to 250 pounds total as recommended by the scale manufacturer or minimum 250 pounds total if no recommendation is provided by the scale manufacturer* for individual wheel scales*;* ~~and~~ minimum 750 pounds total for platform scales. *Where applicable, the calibration recommendation by the scale manufacturer (e.g., a manual or letter from the manufacturer) must be available at all times during an event where the scales are in use."*

Item 5. Effective 11/1/08: Change section 5.12.2.C.5 as follows:

At his or her discretion and without necessarily receiving a request to do so, order *(or request the SOMs order)* disassembly and inspection of any entered car to ascertain its conformance with the GCR. If the car is found to be eligible for the competition in which it is entered, the race organizers shall stand the expense of the disassembly, inspection, and reassembly. If it is not eligible, the entrant shall bear the expense, in addition to whatever penalties *the Chief Steward may assess or* the SOM may direct after receiving the Chief Steward's report. *A representative of the race organizers authorized to approve financial expenditures must formally approve the bond established for such a teardown before disassembly may begin. If handled solely as a Chief Steward's Action, the Chief Steward is directly responsible for monitoring all facets of the process until such time as the impounded parts are either retained by SCCA or returned to the competitor, as the Chairman SOM does in the case of a protest or RFA.*

Item 6. Effective 11/1/08: Change section 7.4.E as follows:
AUTOMATIC PENALTIES
Refusal to permit disassembly (tear down) in a Protest/Request for Action*/Chief Steward's Action* is an automatic penalty of disqualification, six (6) month suspension, and two-hundred-fifty dollars ($250.00) fine.

Item 7. Effective 11/1/08: Change section 9.2.1.I as follows:
If a car is *protested or inspected during an event and* found to be illegal, the results *of this protest or inspection* shall be noted by the Chairman SOM, or delegated to another official, such as the Chief Scrutineer. (See 8.3.3.)

Item 8. Effective 11/1/08: Change section 8.3.3.F as follows:
Preservation of Evidence Any recorded evidence such as technical data or inspectors' reports or measurements shall be forwarded to the Club Office with the tear down bond (See 8.3.3.A.). The Chairman SOM *(or Chief Steward, in the case of a Chief Steward's action)* shall accept any parts tendered by the owner for safekeeping pending appeal. The SOM *(or Chief Steward, in the case of a Chief Steward's action)* shall have the authority to impound parts. *All impounded parts will be uniquely and identifiably marked upon their removal from the car and will remain in the direct control of a licensed Scrutineer or Steward designated by the Chairman SOM or Chief Steward (depending upon the type of action in progress) until such time as they are returned to the competitor or are delivered to and under the direct control of a courier service providing shipment by insurable and traceable means to the National Office for inspection and either retention or subsequent return to the competitor.*

Production

Item 1. Effective 11/1/08: Reclassify EP Elva Courier to FP with the 1800cc engine at 1,900 lbs and 1.5 inch carbs, and the 1600cc at 1,800 lbs.

Item 2. Effective 11/1/08: Reclassify the EP 88-91 Civic Si and CRX Si to FP at 2,075 lbs.

Touring and Showroom Stock

Item 1. Effective 11/1/08: Add new section 32 to section 9.1.7.E as follows:

32. Cosmetic plastic engine covers may be removed.

Item 2. Effective 11/1/08: Add new section 24 to section 9.1.7.E and renumber subsequent sections:

24. Stock replacement brake rotors may be obtained from sources other than the manufacturer provided they are the exact equivalent of the stock rotors.

Item 3. Effective 11/1/08: Add new section 6 to section 9.1.10.D.6.a. as follows:

6. Stock replacement brake rotors may be obtained from sources other than the manufacturer provided they are the exact equivalent of the stock rotors.

RECOMMENDATIONS TO THE BoD

None

MEMBER ADVISORIES

T/SS – The CRB welcomes input from the T/SS community on the requirement for competing with a hardtop. Would the community support allowing their removal under the following conditions; windshield is retained at full height and full width and all open car safety items are made applicable. No weight changes. Interiors remain.

NEW CAR CLASSIFICATIONS

EP – Morgan Super Sport

EP – Triumph TR2, TR3, TR4

FP – Volkswagen Golf III (93-98)

SSC – Honda Civic Coupe (96-00) inadvertently omitted from the GCR

REFERRED or TABLED

GCR

1. Clarify whether a hole on the pace lap may be filled without penalty (Gomberg). Tabled for further discussion.
2. Clean up the fuel acquisition language (Morrison). Tabled for further research.
3. Limit the thickness of roll cage mounting plates (Pichardo/Till). Tabled for further discussion.
4. Add a .5 mm tolerance to chokes/restrictors/throttle bores (LeCain). Tabled for further discussion.
5. Define "upright" as it applies to seats (Weber). Tabled for further discussion.
6. Change the definition of "ferrous" (Young). Tabled for further discussion.
7. Allow alternate fuels (Lipperini). Tabled for further discussion.

Formula/Sports Racer

1. FB – Require mounting components be ferrous, aluminum alloy, or magnesium alloy and change the material requirement for suspension components (Dixon). Tabled for further research.
2. FC – Allow an alternate intake manifold for the Zetec (Lewis). Tabled for further research.
3. FE – Allow provisions for a transponder (Kelly). Tabled for further review.
4. FF – Clarify the FF aero issues (Robinson/Campbell). Tabled for further research.
5. F500 – Allow 3" rubber pucks (Murphy). Tabled for further research.

Production

1. EP – Help the Datsun 240Z (Ira). Tabled for further evaluation of the EP class.
2. EP – Slow the Prelude (Brakke). Tabled for further evaluation of the EP class.

FP – Increase the wheel width of the Alpha Romeo Guilia Spider to 7" (Wood). Tabled for further research.

Touring/Showroom Stock

1. T2 – Allow Mitsubishi Lancer Evo alternate springs, sway bar, and tires (Grand/Peter). Tabled for identification of parts and specifications.
2. T2 – Increase the wheel width and tires size of the Evo (Peter). Tabled for further research.
3. T2 – Add the 2008 350Z Nismo to the spec line (St. Clair). Tabled for further discussion.
4. SSB – Allow a strut tower brace and JCW suspension on the Mini Cooper S (Davis). Tabled for submission of parts to SCCA technical department.
5. SSB – Allow the suspension kit for the 2006-08 Honda Civic Si (Niffennegger). Tabled for further research.

Spec Miata

Allow the standard rebuild procedures (Drago). Tabled for further research.

NOT RECOMMENDED

GCR

1. Review the license renewal process (Coleman). The existing waiver system handles a variety of special situations.

2. Increase the severity of penalties for performance-enhancing non-compliance (Pruitt). The available penalties are sufficient to deal with non-compliant cars.

3. Allow RSI safety certification (Baker). We will monitor standards within the industry.

4. Do not allow passing before passing the start/finish line (Gauzens). The rule is adequate as written.

Production

1. P – Change the alternate transmission weight penalties (Brakke). The rules are adequate as written.

2. HP – Reduce the weight of the Datsun 510 to 1,860 lbs; allow alternate carburetors; and allow an alternate head (4 letters). We have made changes in the class and wish to monitor the results.

3. HP – Increase the comp ratio to 12.0:1 for the 1457/1471 and 1588 LP VWs (Lavine). We have made changes in the class and wish to monitor the results.

Touring/Showroom Stock

1. T – Allow the removal of catalytic converters (3 letters). We will revisit this issue as experience is gained with turbo inlet restrictors.

2. T – Remove camber limits (Buttermore). The rules are adequate as written.

3. T1 – Increase the Viper restrictor or remove weight (Pintaric). The car is classified correctly per the formula for T1 cars.

4. T1 – Reclassify SS Camaro to T2 with updating and backdating (Moore/Baten). The car is classified correctly.

5. T1 – Raise the minimum weight of the C5 to 3,330 lbs (Ingle). The weight is appropriate as specified.

6. T1 – Help the Viper and slow the C6 (Pintaric/Lynch). The car is appropriately specified. We will continue to monitor the car's performance.

7. T2 – Allow 18x9 wheels for the GTO (Brannon). The wheel sizes are adequate as specified.

8. T2 – Reduce the weight of the GTO by 50 lbs (Brannon). The weight is adequate as specified.

9. T2 – Allow a 295/30/18 for the Cadillac CTS-V (Buttermore). The car is competitive as specified. We will continue to monitor the car's performance.

10. T2 – Remove 100 lbs from the Cadillac CTS-V (Buttermore). The car is competitive as specified. We will continue to monitor the car's performance.

11. T2 – Remove the ZOK option from the Solstice (St. Clair). This is a factory option.

12. T2 – Reduce the weight of the Evo by 200 lbs (Peter). The weight is appropriate as specified.

13. T2 – All any spring on the Evo (Peter). This is inconsistent with class philosophy.

14. T3 – Reclassify the Chrysler Crossfire to SSB (Lipperini). The performance potential is outside the SSB parameters.

15. T3 – Reclassify the Nissan 350Z to T3 (Schader). The car is classified correctly. We will continue to monitor the car's performance.

16. T3 – Reclassify the Cobalt to T2 (Ference). We have made changes and wish to monitor the car's performance.

17. T3 – Allow the 2002-04 WRX 17x7.5 wheels and 225/40/17 tires (Faitz). We will review the classification as the turbo inlet restrictors are implemented.

18. T3 – Classify the supercharged Scion tC (Marston). Aftermarket engine modifications are inconsistent with the class philosophy.

19. SS – Reduce the weight of the 1999-2000 Civic Si (Lipperini). The weight is adequate as specified.

20. SS – Allow aftermarket wheels (Schader). This is inconsistent with class philosophy.

21. SS – Require tires with a tread wear rating of 140, DOT certification, and Z or H rated (Lipperini). This has been tried in the past and did not help balance performance.

22. SSB – Reclassify the 2001-05 Miata to SSC (Mead/Drago). The performance potential is outside the SSC parameters.

23. SSB – Reclassify the 2002-05 Toyota MR-2 Spyder to SSC (McCaughey). The performance potential is outside the SSC parameters.

24. SSB – Allow the JCS engine kit for the Mini Cooper S (Davis). Engine modifications are not allowed in Showroom Stock

25. SSC – Allow an alternate model for the Scion tC (Lipperini). The suggested model is a limited production car.

Spec Miata

1. Allow the 1994 to use the 1995-2005 flywheel (Henry). The 1994 cars may use the 1995-2005 flywheel, the rules do not permit flywheel modification, such as reducing the weight of a 94 flywheel to the later 1.8L weight.

2. Decrease the weight of the minimum weight of the 1.6 L flywheel (13 letters). Modifying the stock flywheel is inconsistent with the class philosophy.

3. Increase the weight of the 99+ (Zwolle). The weight is correct as specified.

4. Decrease the weight of the 1990-93 (Zwolle). The weight is correct as specified.

5. Increase the weight of the 1994-2005 (Cutler). The weight is correct as specified.

6. Increase the 1996-7 restrictor plate (Edmison). The cars are adequate as specified.

7. Create class parity (Zwolle). Performance is balanced with the current rules.

Previously Addressed

Addressed in 2008 GCR:

GCR – Define "protect the driver's legs"; are the main hoop support braces that go through a bulkhead into a trunk in the "cabin?" (Henschel/Czaki).

Addressed on the SCCA web site:

GCR – Updated Starter's manual (Staff).

Addressed in Technical Bulletin 08-02 or the February 2008 FasTrack:

3. FF – Remove the original engine specs (Robinson).

Addressed in Technical Bulletin 08-01 or the January 2008 FasTrack:

1. FE – Reduce the weight to 1,250 lbs (Cruz).
2. FP – Increase the Suzuki chokes (Wood).
3. HP – Slow the Spitfire and the 1098 Midget (Camilleri).
4. HP – Allow a carburetor adaptor for the Triumph 1500 (Harlan/Johnson).
5. T1 – Classify the 2008 Corvette (McGinley).
6. SM – Allow 1999 shock mounts (40 letters).

Addressed in Technical Bulletin 07-12 or the December 2007 FasTrack:

T2 – Regulate the turbo cars (Baten).

No Action Required

GCR

1. Runoffs input, 24 class input, national classes input, out of division races (26 letters). Thank you for your input. The SCCA staff, CRB and BoD are reviewing various issues with regard to the Runoffs and the National racing program.

2. Why are you adding the little comments after the canned responses (Garza). Thank you for your input.

3. Are window straps required on rear windows without a frame (Diringer/Safrenek). Yes. A typical installation incorporates straps attached to the body.

4. Mazda input (5 letters). Thank you for your input,.

5. Opposition to proposed changes to section 9.3.19.A Suit Requirements (10 letters). Thank you for your input.

6. What will happen to GT3? (Jackson). The GCR provides regulations that govern class status, and the CRB must follow the rules.

7. Support for allowing open visual inspections (Doane). Thank you for your input. The chief steward has the authority to order this in impound.

8. My med stick input (Olusczak). Thank you for your input,

9. Racing room input (Whitton). Thank you for your input,

Formula/Sports Racer

1. FB – Do not change the rules (Laverty/Conrad). Thank you for your input.

2. FB – Opposition to engine rule changes (Devins). Thank you for your input.

3. FE – Do not combine FE and FM (Skirmants). Thank you for your input.

4. FE – Opposition to weight reduction (Kelly). Thank you for your input.

5. FS – Support for Formula First (Lindstrand). Thank you for your input.

6. FS – Opposition to Formula First (Andrade). Thank you for your input.

7. FV – Support for adjustable cam gears (Edwards). Thank you for your input.

8. FV – Do not change the rules (Galuardi). Thank you for your input.

Production

1. P – Explain the 1477 cc FI VW classification (Wood). Thank you for your input. The classification was the result of member input.

2. P – Was the transmission language lost in the rewrite (Harbaugh)? Thank you for your input. The spec line indicates the number of forward speeds permitted.

3. P – Errors in 2008 GCR (Heintzman). Thank you for your input. The prep level column specifies the prep level and, in the case of the hybrids, references the notes for additional details.

4. EP – Can the Caterham run an open ECU (Nesbit)? The Caterham follows the IT rules that now allow alternate ECU housing.

5. HP – Reevaluate the Nissan 210 specs (Larson). Thank you for your input. The car compares with other vehicles in the class. We will continue to monitor the car's performance.

6. HP – Was the BMW 1600 dropped intentionally (Simpson)? A drop list and details of the process was published in the June FasTrack.

Touring/Showroom Stock

1. T – Keep the T1-T3 rules the same (Lipperini). Thank you for your input.

2. T – Support for removing interiors (Kirkham). Thank you for your input.

3. T2 – Slow the Solstice GXP (Mead/Batten). Thank you for your input. We are developing a plan for turbo inlet restrictors.

4. T2 – Continue to allow pro drivers in club racing (Baten). Thank you for your input.

5. T2 – Classify the 2008 STI (Aqilante). Thank you for your input. We will consider the car upon receipt of the VTS sheet.

6. T3 – Classify the 2007-8 Legacy GT Spec B (Aqilante). Thank you for your input, We will consider the car upon receipt of the VTS sheet.

7. SS – Toyota accusump information (Schwerter). Thank you for your input.

8. SS – Factory options input (Demers). Thank you for your input.
9. SS – Opposition to suspension packages (DuLude). Thank you for your input.
10. SSB – Mazda MX-5 input (Tippens). Thank you for your input.

Spec Miata

1. Support for a spec tire (30 letters). Thank you for your input.
2. Opposition to a spec tire (4 letters). Thank you for your input.
3. Track width input (Nichols/Manning). Thank you for your input.
4. Support for track width change (4 letters). Thank you for your input.
5. Opposition to updating to the 1999 shock hats (Manning). Thank you for your input.

Resumes

F/SR – Stephen Oseth. Thank you for your resume. We will keep it on file.

CLUB RACING TECHNICAL BULLETIN

DATE: January 8, 2008
NUMBER: TB 08-02
FROM: Club Racing Board
TO: Competitors, Stewards, and Scrutineers
SUBJECT: Errors, and Omissions, Competition Adjustments, Clarifications, and Classifications.

All changes are effective 2/1/08 unless otherwise noted.

Formula
FC

1. Section 9.1.1.B.3.f, p. 194, change the section to read as follows: Pistons shall be standard Ford Mahle, AE Hepolite, *CP,* or J&E. Pistons must be unmodified in any way except for balancing and as detailed herein.
2. Section 9.1.1.B.3.f, p. 194, change section 4. and add a new section 5. to read as follows:
   4. CP piston P/N IV 2.0 LTR with rings, pin, connecting rod (with bolts), but without bearings: Minimum permitted weight = 1240 grams. Part number and Ivey logo stamped on wrist pin bosses.
   5. JE piston P/N M-6102-B200 with rings, pin, connecting rod (with bolts), but without bearings: Minimum permitted weight = 1240 grams.
   NOTE: M-6102-B200 piston assembly is now made by JE and is visually different. I.D. Marks: M-6102-B200, Ford racing logo. All marks pin stamped on wrist pin bosses.
3. Section 9.1.1.B.3.f, p. 194, correct the section reference in the last paragraph as follows: ...Section 9.1.1.B.3.d.

FF

1. The FF engine rules have been rewritten and organized for clarity. Replace sections 9.1.1.D, D.1, and D.2 with the following:

D. FORMULA FORD PREPARATION RULES

NOTE: Contained herein are the 1986 Formula Ford chassis construction requirements (see D.6 and D.7).

Definition

a. A formula for single-seat, open-wheel racing cars using standard Ford 1600 "crossflow" pushrod engines, with firewall, floor, and safety equipment conforming to the GCR.

b. Formula Ford is a Restricted class. Therefore, any allowable modifications, changes, or additions are as stated herein. There are no exceptions. IF IN DOUBT, DON'T. Homologation is required for all cars registered after January 1, 1983.

c. Two engines are allowed in Formula Ford:

1. The Ford 1600 GT "Kent" pushrod "crossflow" as installed in the Ford Cortina in 1971 and later. The Kent engine specifications are contained in D.1.

2. The Ford 1600 GT "Cortina" engine as installed in the Ford Cortina through 1970. The Cortina engine specifications are contained in D.2.

D.1. Kent Engine

a. General:

1. Components shall not be interchanged between the Kent and Cortina versions of the engine unless specifically

authorized.

2. The engine shall not be altered, modified, or changed in any respect unless specifically authorized herein.

3. The gasket face of the cylinder head may be resurfaced provided the maximum compression ratio is not exceeded.

4. Valve guides are unrestricted provided the position of the valve is not changed. Standard Ford replacement valves, with oversize stems, may be used as normal repair/maintenance procedures. The specifications, in D.1.f are mandatory. It is permitted to re-cut or replace valve seats. Valve seat angles are unrestricted.

5. Exhaust emission control, air pumps, and associated lines and nozzles shall be completely removed. When these air nozzles are removed from a cylinder head, the holes shall be completely plugged.

6. Balancing of all moving parts of the engine is permitted. The pistons, rods, crankshaft, and flywheel may be lightened to their stated minimum weights. It is permitted to polish parts of the engine providing the contour of the part is not altered and can be recognized as the original part. Pistons may be balanced to the minimum weight by removing weight from the pin boss, the underside of the piston crown, or the bottom edge of the skirt. "Gas porting", re-profiling, or any other modification to the piston, other than expressly permitted herein, is prohibited. Knife-edging the crankshaft throws is not permitted.

7. Compression Ratio

Maximum compression ratio: 9.3 to 1

The following specifications are used in determining compression ratio:

A. Maximum bore size: 3.200"

B. Minimum cylinder volume at Top Dead Center: 42.0cc

C. Maximum valve protrusion from head surface: .040"

D. Only approved head gaskets may be used (see D.1.c.3)

b. Block

1. Bore may be enlarged for clearance between cylinder and piston.

2. Cylinder sleeves may be fitted. The top surface of the block may be milled or surface ground to obtain the maximum compression ratio specified above. Any steel center main bearing cap may be used. The oil pump mounting face on the block may be machined for the purpose of fitting an oil pump.

3. The 1600 Fiesta block is permitted as a replacement part.

c. Cylinder Head

1. Ports may be reshaped by the removal of metal as long as the port diameter at the manifold face of the head does not exceed the following dimensions:

Inlet: 1.50" Exhaust: 1.20"

2. The use of the Pierce aluminum cylinder head is permitted.

3. The following head gaskets are allowed:

a. Ford Part # 931M6051AA

b. Payen Part # AH-750

c. Felpro Part # 8360PT-1

d. Inlet Manifold

1. The ports may be reshaped by the removal of metal as long as the following dimensions are maintained:

Maximum dimension at head face: 1.340"

2. Carburetor Flange

Maximum dimensions at carburetor flange: see Figure 1.

Figure 1

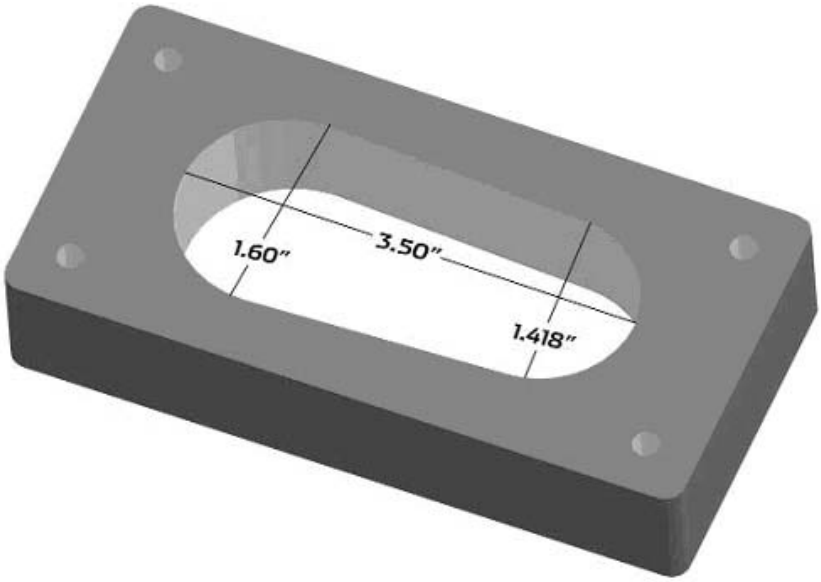

3. The carburetor face of the inlet manifold may be machined to the horizontal to compensate for fore/aft tilt of the carburetor.

4. Epoxy exposed in the manifold used to make repairs is acceptable, providing the total area is less than 0.75 square inches.

5. The water passages in the inlet manifold may be plugged. Holes in the inlet manifold resulting from the removal of emission/vacuum lines shall be plugged.

e. Pistons

1. Standard or 0.005 inch oversize pistons shall be used.

2. Standard size AE pistons P/N 18649, casting P/N 18634, standard size CP piston, part # 81-2 FF1600, or CP over-size piston, part # 81-2- FF1600+5 may be used.

3. Alternate piston identified as follows is allowed: P/N AE-M717D, casting number 711 M 6110. AE Hepolite P/N 20552, Casting # 20548A. Note: Mahle pistons are not allowed.

4. Dimensions and Weights

Maximum diameter:

Standard: 3.187"

0.005" o/s: 3.192"

Depth of bowl: 0.470" (minimum)

Maximum diameter of bowl: 2.44" AE Hepolite,

2.50" CP Piston

Centerline of wrist pin to crown: 1.737 +/- .002"

Overall height: 3.30" AE Hepolite

2.80" CP Piston

Minimum weight : 515 grams (w/ clips, pins and rings)

Weight of pin: 115 +/- 2 grams

Ring Groove Widths: Top Groove: 0.064"

2nd Groove : 0.0795"

Oil Groove: 0.159"

5. Piston rings are unrestricted provided that:

a. One oil control and two compression rings are used.

b. No modification is made to the piston for the installation of rings.

c. Pocketing of the piston valve reliefs is allowed up to a maximum of .050” to obtain the maximum combustion chamber volume.

f. Valves

1. Dimensions

	Iron head	Alloy head
Distance apart at centers	1.540” +/- .020”	1.570 +/- .020”

Max. diameter:

Inlet: 1.560”

Exhaust: 1.340”

Overall length:

Inlet: 4.367” +/- .020”

Exhaust: 4.355” +/- .020”

2. Reshaping of the valves is specifically prohibited.

3. Alternate valve AE p/n V34524 (intake), V34525 (exhaust) are permitted.

g. Camshaft

1. Regrinding camshaft lobes is permitted, providing they are ground to meet FORD and SCCA profile.

2. Camshaft Lobe Centers: 109° +/- 2°

Lift at top of pushrod:

Inlet: 0.231” +/- .002” Maximum

Exhaust: 0.232” +/-.002” Maximum

Lift at spring cap: (Valve Lift)

Inlet: 0.356” Maximum

(Zero tappet setting)

Exhaust: 0.358” Maximum

3. Recontouring of the valve stem contact pad of the rocker arm is permitted, provided the maximum lift at the spring cap is not exceeded

4. Offset camshaft/sprocket dowels are permitted.

5. Camshaft profile and lobe centers shall be checked using the official procedure published by SCCA.

6. A camshaft that is a replica of the original camshaft and of the same material may be used.

h. Valve Springs

Valve springs and valve spring shims are unrestricted, except that:

1. Springs and shims shall be made of steel.
2. No more than one spring shall be used per valve.
3. Conically wound springs are not allowed.
4. The standard spring cap and retainers shall be used.

i. Pushrods

Minimum stem diameter: 0.25”

Overall length: 7.64” Minimum

Minimum weight: 50 grams

j. Connecting Rods

Any ferrous connecting rod may be used provided it meets a minimum weight of 630 grams and has a center to center length of 4.925 +/- 0.020 inches. (Note: Weights include cap, bolts, and small end bush, but not big end bearing shells).

k. Crankshaft

An alternate cast steel crankshaft meeting original Ford Kent and SCCA

dimensions and weight is permitted.

Weight: 24 lbs. 8 oz. Minimum

Max Stroke (at piston): 3.056" +/- .004"

Crankshaft pulley: unrestricted.

The crankshaft from the Cortina engine may be used.

The crankshaft from the Fiesta engine may be used.

The crankshaft may be shot peened.

l. Flywheel

1. Weight with ring gear: 15.5 lbs minimum.

2. The flywheel may be machined to reduce weight to the above minimum weight. Flywheel locating dowels are permitted.

3. Weight may be added to the flywheel, providing it is added ONLY to the existing clutch bolt holes, i.e., single cap screws or set screws. No continuous material shall be used.

4. An alternate flywheel, part # JAE1600 is also allowed at the above weight of 15.5 lbs.

m. Carburetor

Weber 32/36 DGV or Holley 5200

Venturi diameter: Primary: 26mm

Secondary: 27mm

It is permitted to:

1. Fit any jets (including accelerator pump discharge nozzle) as long as no modifications to the carburetor body are required.

2. Modify or substitute the external throttle linkage.

3. Fit internal and/or external surge pipes.

4. Remove the air cleaner

5. Fit velocity stacks

6. Remove the choke butterflies and linkage.

7. Use an alternate carburetor gasket provided it is the same thickness as the original gasket and doesn't exceed the manifold opening dimensions

8. Modify the carburetor housing for the installation of throttle shaft bearings provided the modification serves no other purpose.

m. Fuel Pump

Unrestricted

o. Exhaust Manifold

Unrestricted

p. Lubrication System

Oil pump and sump: Unrestricted

Dry sump system is permitted.

q. Cooling System

Radiator, fan, and water pump: Unrestricted

Pump/fan/generator drive belt: Unrestricted

r. Electrical Equipment

Distributor: Distributors are unrestricted provided the original drive, location, and housing (standard Motorcraft, Bosch, Lucas, or Mallory distributor #4558101) are retained. The distributor is defined as the component that triggers the LT current and distributes the HT current. The ignition timing may only be varied by vacuum and/or mechanical means. It is prohibited to use any other method or component to trigger, distribute, or time the ignition. Standard Motorcraft (Autolite), Bosch, or Lucas. The vacuum

advance mechanism may be removed, and the distributor advance plate may be secured by soldering or welding or by suitable fasteners. The advance curve and advance springs are unrestricted. Generator/ Alternators: not required. All other electrical components are unrestricted.

s. Miscellaneous

1. The timing chain/sprocket cover may be altered or replaced.

2. The use of the following non-standard replacement parts is permitted provided their use does not result in any unauthorized modification of any other component:

A. Fasteners - nuts, bolts, screws, studs, etc. Intake manifold fasteners may be of either a socket head or hex head configuration, and must be 5/16" diameter.

B. Gaskets, except head gasket.

C. Washers.

D. Seals.

E. Connecting rod, crankshaft, and camshaft bearings of the same size and type as original. Normal oversize/undersize bearings are permitted. This does not allow reducing the bearing surface area by reducing the width of standard bearings.

F. Spark plugs.

G. Rocker pedestals that are of the same material and dimensionally identical (i.e., shaft location, offset, etc.) to the original components may be used.

3. Mechanical tachometer drive is permitted.

4. The crankcase breather may be altered or removed.

5. The standard rocker cover may be altered to provide for crankcase ventilation, and the filler cap may be altered or replaced. Valve or rocker covers may be substituted, provided that the replacement cover affords no additional function than that of the original stock cover. (relocated text from 8 below)

6. The crankshaft and main bearing caps may be treated with salt-bath nitriding cover under SAE specification AMS 2755A (tuftriding, etc.)

7. Any oil or lubricants may be used.

8. Water pump, fan, and generator/alternator pulley(s) are unrestricted.

9. Exhaust Outlets

Exhaust outlets on cars registered after January 1, 1986 shall not extend more than 60cm (23.60") behind the centerline of the rear axle and shall be positioned between 30cm (11.8") and 60cm (23.6") from the ground, measured to the bottom of the exhaust pipe.

Exhaust Outlets: Cars registered prior to January 1, 1986.

A. It is recommended that all exhaust outlets be no longer than 60cm (23.60") behind the centerline of the rear axle and positioned between 30cm (11.8") and 60cm (23.6") from the ground.

B. For cars unable to comply with the above rule (A.), they shall have a support bracket that attaches within six (6) inches of the outlet end, and the support bracket shall extend no more than thirty (30) degrees from vertical to the rear. Beginning January 1, 1986, it is mandatory for all Formula Ford cars.

D.2 Cortina Engine

All of D.1 applies to the Cortina engine except as specified in this section. Components shall not be interchanged between the **Kent** and **Cortina** versions of the engine unless specifically authorized.

a. Compression Ratio

Maximum compression ratio: 10.0 to 1. The following specifications are used in determining compression ratio:

1.64cc - top ring to top of piston

5.60cc - head gasket.

Minimum unswept volume per cylinder:

44.4cc (original engine with standard pistons)

45.1cc (original engine with .030" o/s pistons)

b. Block

The 1600 Pinto block, P/N DIFZ-6010-C, may be used as a replacement for the Cortina block; Standard Pinto tappets, P/N DORY

6500A and DIFZ 6500A may also be used when this block is used as a Cortina replacement.

c. Cylinder head

Ports may be reshaped by the removal of metal as long as the port diameter at the manifold face of the head does not exceed the following dimensions:

Inlet: 1.50” Exhaust: 1.16”

Combustion chamber:

Minimum depth 0.115”

Maximum length: 3.15”

Minimum volume per cylinder: 7.8cc

Reshaping is prohibited.

Ford Pinto cylinder head P/N DORY 6049B is permitted.

d. Inlet Manifold

The ports may be reshaped by the removal of metal as long as the following dimensions are maintained:

Maximum Size at head face:

Cyl. 1 & 4: 1.48” x 1.28”

Cyl. 2 & 3: .25”

Maximum size at carburetor flange: 3.060” x 1.389”

Maximum width: 3.80”

Primary choke end radius:.709”

Secondary choke end radius: .787”

e. Pistons

Standard, 0.015 inch oversize or 0.030 inch oversize pistons may be used.

Piston Maximum diameter:

Standard: 3.189”

0.015” o/s: 3.204”

0.030” o/s: 3.219”

Depth of bowl: 0.500” ±.005”

Minimum volume of bowl: 31.5cc

Maximum diameter of bowl: 2.28”

Centerline of wrist

pin to crown: 1.737” +/- .002”

Overall height: 3.30”

Minimum weight

w/rings & pin: 525 grams

Weight of pin: 115 +/- 2 grams

f. Valves

Distance apart at centers: 1.540” +/- .020”

Max. diameter:

Inlet: 1.502”

Exhaust: 1.252”

Overall length:

Inlet: 4.280” +/- .006”

Exhaust: 4.260” +/- .006”

g. Crankshaft

Weight: 23 lbs. 8 oz. minimum

The crankshaft from the Kent engine may be used.

h. Carburetor

Weber 32 DFM or DFD or Holley 5200

Venturi Diameter: Primary: 26mm

Secondary: 27mm

Grand Touring

GT2

1. Engines – Pontiac, p. 290, correct the 2471cc engine by changing the specs to read as follows: Bore x Stroke(mm): 101.6 x 76.2.
2. Engines – Porsche, p. 292, add a spec line for the 3.8L engine as follows: Engine Type: DOHC, Bore x Stroke(mm): Unspecified, Displ.(cc): 3800, Head Type: Alum, Crossflow, Valves/Cyl.: 2, Fuel Induction: Unrestricted automotive type, Weight(lbs): 2380.

Note this was inadvertently dropped during the reorganization of the GT2 spec lines.

Production

EP

1. Acura Integra (86-89), p. 416-417, add to the specs as follows: Notes: Valve lift measured as raced (w/ lash).
2. Acura Integra (90-93), p. 416-417, add to the specs as follows: Notes: Valve lift measured as raced (w/ lash).
3. BMW Z3 1.9L, p. 418-419, add to the specs as follows: Notes: Valve lift measured as raced (w/ lash).
4. Honda Prelude Si, p. 420-421, add to the specs as follows: Notes: Valve lift measured as raced (w/ lash).
5. Lotus / Caterham 7 America, p. 422-423, correct the Notes to read as follows: Level 2 suspension preparation. Engine is limited to IT preparation *except modifications permitted in section 9.1.5.E.2.e and f.* Comp. ratio limited to 10.0: 1, Valve lift limited to .380”. ~~Stock intake manifold may be port matched on port mating surface to a depth of no more than 1”. Manifold may not be otherwise altered. Any camshaft may be used. Valve lift measured at valve with zero lash or clearance. Stock cam gears may be replaced.~~
6. Mazda MX-5 / Miata 1.8L (90-97), p. 422-423, add to the specs as follows: Notes: Valve lift measured as raced (w/ lash).
7. Mazda MX-5 / Miata (94-97), p. 424-425, add to the specs as follows: Notes: Valve lift measured as raced (w/ lash).
8. Mazda MX-5 / Miata (99-02), p. 424-425, add to the specs as follows: Notes: Valve lift measured as raced (w/ lash).
9. Classify the Morgan Super Sport in EP.

Add new spec line to PCS-B, p. 424-425, Morgan Super Sport, Prep. Level: 1, Weight(lbs): 1820, Engine Type: 4 Cyl OHV, Bore x Stroke(mm): 86.1 x 91.1, Displ.(cc): 2138, Block Mat’l: Iron, Head Mat’l: Iron, Valves IN & EX(mm): (I)39.6 (E)33.0, Carb. No. & Type: (2) Weber 42 DCOE w/ 34mm choke(s), Wheelbase(in): 96.0, Track (F/R)(in): 52.0/52.5, Wheels(max): 13 x 7, Trans. Speeds: 4, Brakes Std.(in): (F)11.0 Disc (R)9.0 Drum.

Note: This car was included in the 2007 Prod car drop list.

10. Nissan/Datsun 240-Z, p. 424-425, add to the specs as follows: Notes: Valve lift measured as raced (w/ lash).
11. Nissan/Datsun 260-Z, p. 426-427, add to the specs as follows: Notes: Valve lift measured as raced (w/ lash).
12. Nissan 200-SX SE-R, p. 426-427, add to the specs as follows: Notes: Valve lift measured as raced (w/ lash).
13. Nissan 240-SX/S13, p. 426-427, add to the specs as follows: Notes: Valve lift measured as raced (w/ lash).
14. Nissan NX-2000, p. 426-427, add to the specs as follows: Notes: Valve lift measured as raced (w/ lash).
15. Nissan Sentra SE-R (90-94), p. 426-427, add to the specs as follows: Notes: Valve lift measured as raced (w/ lash).
16. Classify the Triumph TR2, 3, 3A, 3B, 4, 4A in EP.

Add new spec lines to PCS-B, p. 428-429, Triumph TR2, 3, 3A, 3B, 4, 4A, Prep. Level: 1, Weight(lbs): 1820, Engine Type: 4 Cyl OHV, Bore x Stroke(mm): 83.1 x 92.0, 86.1 x 92.0, Displ.(cc): 1991, 2138, Block Mat’l: Iron, Head Mat’l: Iron, Valves IN & EX(mm): (I)39.6 (E)33.0, Carb. No & Type: (2) 1.75” SU or Stromberg, (2) 2” SU, Wheelbase(mm): 2235, Track (F&R)(in): 53.0 / 52.5, 54.6 / 53.6, Wheels(max): 15 x 7, Trans. Speeds: 4, Brakes Std.(mm): (F)279 Disc (R)229 Drum, Brakes Alt.(mm): (F) Calipers and discs from TR-6 (std. or alt.) (R) 254 Drum, Drum may be 9” or 10” and of alfin or steel, Notes: Front apron assembly may be made of alternate material. Laycock overdrive, may use 5 speed gearbox without overdrive.

Note: This car was included in the 2007 Prod car drop list.

17. Volkswagen Golf GTI (87-89), p. 430-431, correct the specs to read as follows: Track (F&R)(in): 60.5 / 60.2.

FP

1. Honda Civic Del Sol, p. 436-437, add to the specs as follows: Notes: Valve lift measured as raced (w/ lash).
2. Honda Prelude (84-87), p. 438-439, add to the specs as follows: Notes: Valve lift measured as raced (w/ lash).
3. Mazda GLC / 323 (86-88), p. 438-439, add to the specs as follows: Notes: Valve lift measured as raced (w/ lash).
4. Volkswagen Golf 1.8 (85-92), p. 442-443, correct the specs to read as follows: Track (F&R)(in): 60.5 / 60.2.
5. Classify the Volkswagen Golf III (93-98) in FP with Level 2 prep.

Add new spec line to PCS-B, p. 442-443, Volkswagen Golf III (93-98), Prep Level: 2, Weight(lbs): 1995, Engine Type: 4 Cyl SOHC, Bore x Stroke(mm): 82.5 x 92.8, Displ.(cc): 1984, Block Mat’l: Iron, Head Mat’: Alum, Valves IN & EX(mm): (I)39.5 (E)32.9, Carb. No. & Type: Fuel Injection, Wheelbase(in): 97.3, Track (F&R)(in): 62.4 / 61.7, Wheels(max): 15 x 7, Trans. Speeds: 5, Brakes

Std.(mm): (F)257 Disc (R)227 Disc, Notes: Comp. Ratio limited to 10.5, Valve lift limited to .450".

6. Volkswagen Jetta 1.8 (85-92), p. 442-443, correct the specs to read as follows: Track (F&R)(in): 60.5 / 60.2.

7. Volkswagen Rabbit 1588 (includes Cabriolet/Convertible), p. 444-445, add to the specs as follows: Valves IN &EX(mm): (I)40.0 (E)33.0. Change the specs to read as follows: Carb. No & Type: (1) 40 DCN, DCNF, IDF w/ 34mm choke(s), or (2) auto type side draft w/ 34mm choke(s) or I.R. manifold, or fuel injection, alternate throttle body w/ 1.381 primary and 2.051 secondary allowed.

8. Volkswagen Scirocco 1588, p. 444-445, add to the specs as follows: Valves IN &EX(mm): (I)40.0 (E)33.0. Change the specs to read as follows: Carb. No & Type: (1) 40 DCN, DCNF, IDF w/ 34mm choke(s), or (2) auto type side draft w/ 34mm choke(s) or I.R. manifold, or fuel injection, alternate throttle body w/ 1.381 primary and 2.051 secondary allowed.

GP

1. Volkswagen Jetta 1780 (85-91), p. 452-453, correct the specs to read as follows: Track (F&R)(in): 60.5 / 60.2.
2. Volkswagen Golf (GTI, GT, GL), p. 452-453, correct the specs to read as follows: Track (F&R)(in): 60.5 / 60.2.

HP

1. Volkswagen Golf (GTI, GT, GL), p. 460-461, correct the specs to read as follows: Track (F&R)(in): 60.5 / 60.2.
2. Volkswagen Jetta 1780 (85-91), p. 460-461, Volkswagen Golf (GTI, GT, GL), p. 452-453, correct the specs to read as follows: Track (F&R)(in): 60.5 / 60.2.

Showroom Stock

SSB

1. Mazda MX-5 (2006), p. 492, delete the spec line in its entirety.
2. Mazda MX-5 (07-08), p. 492, add the 06 model year.

SSC

1. Classify the Honda Civic Coupe in SSC.

Add new spec line to SSCS, p. 495, Honda Civic Coupe (96-00), Bore x Stroke(mm) / Displ.(cc): 75.0 x 90.0 / 1590, Wheelbase(mm): 2621, Track F&R(mm): 1476 / 1476, Wheel Size(in) / Mat'l: 14 x 4.5 Steel, Tire Size(stock): 185/65, Gear Ratios: 3.25, 1.90, 1.25, 0.91, 0.70, Final Drive: 4.25, Brakes(mm): (F)262 Vented Disc (R)201 Drum, Weight(lbs): 2500, Notes: Honda Motorsports performance package (#17D50-S02-C1) permitted. Performance kit includes: Shocks (F): Koni #8042-1001, Shocks (R): Koni #8042-1002, Springs (F): Eibach Kit #9328.140, 350# rate, Springs (R): Eibach Kit #9328.140, 500# rate, Swaybar (R): Neuspeed #H43.22.72, 22mm, Camber: +/- 2° from service manual specs, Wheels: Enkei #ENK13214649SM, 14 x 6".

NOTE: This car was inadvertently omitted from the 07 & 08 GCR.

2. Toyota Corolla XRS (2005), p. 497, add to the specs as follows: Notes: Canton Accusump #24-026, install sandwich #24-700, valve #24-260, and related hoses and bracket allowed.

Sports Racing

S2000

1. Section 9.1.9.B.5.f, p. 527, change the section to read as follows: Pistons shall be standard Ford Mahle, AE Hepolite, *CP,* or J&E. Pistons must be unmodified in any way except for balancing and as detailed herein.
2. Section 9.1.9.B.5.f, p. 528, change section 4. and add a new section 5. to read as follows:

   4. CP piston P/N IV 2.0 LTR with rings, pin, connecting rod (with bolts), but without bearings: Minimum permitted weight = 1240 grams. Part number and Ivey logo stamped on wrist pin bosses.

   5. JE piston P/N M-6102-B200 with rings, pin, connecting rod (with bolts), but without bearings: Minimum permitted weight = 1240grams.

   NOTE: M-6102-B200 piston assembly is now made by JE and is visually different. I.D. Marks: M-6102-B200, Ford racing logo. All marks pin stamped on wrist pin bosses.

Touring

T2

1. Dodge SRT-4 (03-05), p. 580, change the specs to read as follows: Wheel Size(in): 17 x 8.5 (F&R), Tire Size: 205/50 or 225/50.

ST

1. Chevrolet Corvette C6 Z06 (06-07), p. 586, add to the specs as follows: Notes: Alternate GM dry sump tank #12611803 allowed.

COURT OF APPEALS

JUDGMENT OF THE COURT OF APPEALS
Beran Peter vs. SOM, COA Ref. No. 07-29-SE
December 13, 2007

PRIOR PROCEEDINGS AND FACTS IN BRIEF
Following the ARRC Group 3 race for ITB cars at Road Atlanta on September 10, 2007, Trevor Degioanni, driver of ITB car #60, protested Beran Peter, driver of ITB car #0, for several violations of GCR 2.1.4 (reckless or dangerous driving). The Stewards of the Meet (SOM) Sara Snider, Bob Forsten and Robert Horansky, Chairman, met, reviewed evidence, heard evidence, and rendered a ruling. The SOM determined Mr. Peter violated GCR 6.8.1.b and penalized him with the loss of one finishing position in class. Mr. Peter is appealing the decision of the SOM.

DATES OF THE COURT
The National Court of Appeals (COA), Dick Templeton, Tom Hoffman and Michael West, Chairman, met on December 6 and December 13, 2007, to hear the appeal, review the evidence, and render a decision. Bob Horansky, COA member, was an official at this event and recused himself from this action.

DOCUMENTS AND OTHER EVIDENCE RECEIVED AND REVIEWED

1. Letter of Appeal and related documents from Beran Peter received December 10, 2007.
2. Official Observer's Report and related documents.
3. Verbal testimony from Bob Horansky, December 6, 2007.
4. Email from Ken Irwin, Operating Steward, received December 13, 2007.
5. Email from Trevor Degioanni, ITB Car # 60, received December 13, 2007.

FINDINGS
In his appeal, Mr. Peter notes that he protested Mr. Degioanni's conduct citing violation of GCR 6.8.1.b & d (racing room and passing) for an incident at the start/finish line and 2.1.7 (unsportsmanlike conduct) for a later incident on pit road. Mr. Peter also asserted Mr. Degioanni's protest was filed in retaliation for Mr. Peter's protest and thus vexatious. He further stated the SOM did not advise him that his conduct during the race was under review as a result of Mr. Degioanni's protest.

The Court of Appeals reviewed all documentation and determined Mr. Degioanni's protest was filed first, that is, before Mr. Peter filed his protest. Therefore, Mr. Peter's assertion that Mr. Degioanni's action was retaliatory and vexatious is not accurate.

The Court of Appeals received testimony from Bob Horansky, First Court Chairman, that Mr. Peter was indeed advised that his actions during the race were under review as a result of Mr. Degioanni's protest. Mr. Horansky also noted the Operating Steward (Ken Irwin) considered filing a Request for Action for the start/finish line incident, but deferred to the protests.

To support his appeal Mr. Peter submitted a witness statement from his crew chief and an email from another competitor. The crew chief's witness statement offered no new evidence and simply restated the information provided to the SOM by the protestor, appellant, and other witnesses, and offered his opinions. The email from the other competitor did not address or discuss the incidents at all.

Mr. Peter stated that other individuals witnessed the start/finish line incident and might be able to add more information. However, he did not provide any statements from those unnamed individuals.

Appellants are reminded that it is their responsibility to obtain and submit all evidence that they wish the COA to consider in support of their appeal. The evidence must be submitted to the COA within the 10-day appeals period. The COA annually publishes its operating guidelines and requirements in Fastrack. The 2007 guidelines are in the February edition.

The penalty assessed by the SOM was well within the authority granted by the GCR. Mr. Peter did not supply any new relevant evidence or testimony that would support overturning the First Court's decision.

DECISION
The Court of Appeals upholds the decision of the SOM in its entirety. Mr. Peter's appeal is not well-founded and his appeal fee will be retained by the SCCA.

SOLO EVENTS BOARD MINUTES

SEB MINUTES | *January 2008*

The Solo Events Board met by conference call and electronic follow-up in November and December. Participating were board members Jason Isley, Andy Hollis, Marcus Merideth, Steve Wynveen, Ron Bauer, Donnie Barnes, and Tina Reeves. Also participating were incoming SEB members Dave Whitworth, Erik Strelnieks, and Rick Myers, as well as Nancy Downing and Doug Gill of the National Staff and Lisa Noble of the BOD. These minutes are presented in topical order rather than in the order of discussion.

Unless noted otherwise the effective date for all rule, class, and listing change proposals herein is 1/1/2009.

GENERAL

- Competitors are reminded that a protest against an incident or action which they feel is in violation of the Solo Rules or the Supplemental Regulations, must be filed against an event organizer, official or competitor who caused that incident or accident to take place. It is not appropriate to protest a competitor who has complied with the direction of an official.
- The SEB thanks Chris Franson, Peter Hetman, Robbie Robinson, and Mark Dempsey for their service to the Club as Divisional Solo Events Stewards.
- Tina Reeves has been selected as the SEB Chairperson for 2008.
- The SEB selected recipients for the 2007 Driver of the Year, Rookie of the Year, and Divisional Event of the Year awards. These are to be presented at the National Convention in February.
- With due consideration given to the extraordinary circumstances surrounding the Solo National Championship event of 2001, the SEB has approved the reinstatement of Phil Alspach to 100 Percenter Status.

STREET TOURING CATEGORY

- The following new members have been appointed to the STAC: Chris Shenefield, Andy Hollis, Karl Coleman.
- The SEB thanks the following departing STAC members for their service to the Club: Mark Sipe, Jeff Brown, Phil Osborne, and Brian Fitzpatrick.

STREET PREPARED CATEGORY

- The SPAC has provided an updated version of their proposal for a new subsection 15.10.I, regarding radiators, as follows:

"15.10.I Engine cooling radiators may be replaced with alternate parts subject to the following restrictions:

1) Radiator core dimensions (width, height, thickness) must be no smaller than the standard part.
2) Radiator must mount to OE radiator mounts.
3) Fluid capacity /_and dry weight_/ of radiator must be no less than that of the standard part.

Alternate radiators may serve no other purpose (e.g. to allow a cold air intake passage)."

MODIFIED CATEGORY

- The SEB approved the addition of Jim Garry, Gary Milligan, and Shelton Lemoine to the MAC.

TECH BULLETINS

- Modified, per the MAC: Section 18.1.E.3 Front Aero, as it applies to the case of the Lotus Seven and similar cars with irregular front top view profiles for front spoiler/splitter construction - As an example, the Lotus Seven has a narrow central nosecone and separated front fenders. If a front spoiler wider than the nosecone were added, it would hang in free air. Air would flow both above and below the spoiler, meeting the definition of a wing, which would be an illegal configuration. However, the rules allow the front spoiler to be as wide as the rear bodywork of the car at axle height. A front spoiler/splitter only as wide as the nosecone would be of limited aerodynamic value. Furthermore, front aero is needed to balance rear aero; limiting one effectively limits the other. So, in the interest of parity, the Seven and similar cars are allowed to add a full width front spoiler. However, if you would add such a spoiler, you must fill in the front bodywork, closing the gaps between the nosecone, spoiler, and clamshell fenders, to avoid creating a "wing". This will require adding bodywork filler panels for the car, and will change its look as it changes its function. The temptation might be to further optimize the cars front end for aero purposes, creating a sports racer-like wedge-shaped front using angled ramps to join the fenders to the spoiler/splitter assembly. This would exceed the parity intended by this allowance and is not allowed. Therefore, when a Lotus Seven or similar vehicle uses a full-width front spoiler, the car's spoiler/ air dam is required to be vertical (between 80-100 degrees) for the lower 8" of its extent. The splitter is to be horizontal within +/- 3/16" over its length. Outside of these constraints, the builder may close off the front of the car in any manner necessary. The change in top view outline caused by these bodywork changes is allowed. The spoiler/air dam cannot be any wider than the rear bodywork at axle height. Splitters can extend 6 inches forward of the top view outline, but cannot extend wider than the top view outline.
- Modified, per the MAC: Section 18.1.E.3.d Front splitter 1/8" edge radii - The 1/8" edge radius was specified for safety reasons, to avoid sharp edges. A rounded, ¼" thick splitter edge would accomplish that intent. ¼" thick rounded edge moulding could be used if a front splitter is constructed of material thinner than ¼".
- Modified, per the MAC: Section 18.1.E.3.d Front splitter 1/8" edge radii - The 1/8" edge radius was specified for safety reasons, to avoid sharp edges. A rounded, ¼" thick splitter edge would accomplish that intent. ¼" thick rounded edge moulding could be used if a front splitter is constructed of material thinner than ¼".

· Modified, per the MAC: Section 18.1.E.5 Closed undersides or belly pans - Any added belly pan is to be flat in length and width, with a total deviation measurement of 1" from the highest to the lowest point along its length and width. The 1" tolerance specification is to allow for a slight variance due to construction imperfections. No additional underside aero features are allowed. Specifically: a front diffuser, shallow tunnel(s), steps, or other underside air management features are counter to the letter/intent of the rule and are illegal. This is in the interest of reducing cost and complexity. Chassis rake is unrestricted and does not contribute to or detract from belly pan flatness. The 1" rule is with respect to the underside of the car, not the ground, and may be measured by applying a long straightedge to the underside of the car and ensuring that no gaps over 1” are found. The 3/8” (1cm) body side or side skirt downwards extension allowance is included in, not added to, the 1” total deviation.

· Modified, per the MAC: Section 18.1.E.7 spoiler end plates - The rear spoiler is measured from leading, attached edge to trailing or outermost, free edge. Its measure is independent of its angle of attack. A roof spoiler up to the maximum of 4” is allowed an area of up to 16 square inches for each endplate; a trunk spoiler up to the maximum of 10” is allowed up to 100 square inches for each endplate. Side plates do not have to be square or rectangular; the side profile shape is open. If end plates are to be used with the front spoiler/air dam/splitter assembly, a maximum area of 36 square inches per end plate is allowed.

· Modified, per the MAC: Bumpers - Stock bumpers may be retained, removed, or made of alternate materials. The bumper, if retained, will contribute its contour to the top view outline of the car for measurement purposes. Bumpers made of alternate materials shall retain the shape and size of the original.

QUICK LINKS

The following items have been removed from regular inclusion in FasTrack News and can be found on SCCA's Web site at the following links:

CLUB RACING

Accredited Driver Licensing Schools: http://www.scca.com/contentpage.aspx?content=39

Forms: http://www.scca.com/contentpage.aspx?content=45

Technical Forms: http://www.scca.com/contentpage.aspx?content=74

Scrutineer's Forms: http://www.scca.com/contentpage.aspx?content=77

Vehicle Homologation Forms: http://www.scca.com/contentpage.aspx?content=79

General Competition Rules (GCR): http://www.scca.com/contentpage.aspx?content=44

SOLO

Forms: http://www.scca.com/contentpage.aspx?content=60

Rulebook: http://www.scca.com/contentpage.aspx?content=61

RALLY

Forms: http://www.scca.com/contentpage.aspx?content=49

Rulebook: http://www.scca.com/contentpage.aspx?content=50

SCCA NATIONAL CONVENTION

Event page: http://www.scca.com/event.aspx?hub=6&event=11083

Registration : http://www.scca.com/eventitems.aspx?item=276&event=11083&hub=6

EVENT CALENDAR: http://www.scca.com/events.aspx?hub=10

Fastrack news official SCCA member notification

EFFECTIVE FIRST DAY OF THE COVER MONTH UNLESS OTHERWISE NOTED March 2008

BOARD OF DIRECTORS MINUTES

BOARD OF DIRECTORS' MINUTES | SPORTS CAR CLUB OF AMERICA, INC. | *Feb. 6-10, 2008*

The Board of Directors, Sports Car Club of America, Inc. met in San Antonio, February 6, through February 10, 2008. The following members participated: R.J. Gordy, Chairman, Howard Allen, Jim Christian, Philip Creighton, Larry Dent, Bob Introne, Bob Lybarger, Lisa Noble, Andy Porterfield, Mike Sauce, John Sheridan, K.P. Jones and Jerry Wannarka. Jim Julow, President, Jeff Dahnert, Vice President of Finance, Eric Prill, Vice President Marketing and Communications, Peter Lyon, Risk Management, Howard Duncan, Vice President Rally/Solo, Colan Arnold, Vice President Membership and Region Development, Terry Ozment, Vice President Club Racing, Ken Patterson, Chairman of the Stewards, Bob Dowie, Chairman, Club Racing Board, Tina Reeves, Chairman, Solo Events Board, Matt Rowe, Chairman TimeTrials Comitteee, Mark Walker, Chairman, RallyCross Board, Kevin Poirier, Chairman Road Rally Board, Bob Wildberger, R. David Jones, also participated.

The Secretary acknowledges that these minutes are not in chronological order.

CONTENTS

BOARD OF DIRECTORS	**1**
Board of Directors Minutes	1
CLUB RACING	**7**
CRB Minutes	7
Immediate Rule Change	22
Technical Bulletin	22
COURT OF APPEALS	**29**
SOLO	**31**
SEB Minutes	31
RALLY	**35**
RallyCross Board Minutes	35
RoadRally Board Minutes	35
QUICK LINKS	**37**

MOTION: To approve the minutes of the January 7, 2008 meeting. (Allen/Porterfield) PASSED. Unanimous.

PRESIDENTS REPORT

Jim Julow reported on the health of the three programs. Time Trials and Rally showed significant growth. Club Racing entries are down slightly. He covered marketing activities, including the new website. He also highlighted planned activities for 2008.

FINANCE AND ADMINISTRATION

Jeff Dahnert reported that the SCCA Inc. SCCA Enterprises and SCCA Pro all finished 2007 in the black.

SOLO/RALLY and SCCA FOUNDATION

Howard Duncan reviewed Strategic plans for the Rally program. He also reported on the successes of the Street Survival Program in 2007.

MEMBERSHIP and REGION DEVELOPMENT

Colan Arnold reported on membership trends, and the weekend membership program. He also reviewed convention activities and plans for 2009.

MARKETING and COMMUNICATIONS

Eric Prill reviewed planned marketing and licensing initiatives for 2008. He also covered planned improvements to the Web site.

CLUB RACING

Terry Ozment presented participation numbers for 2007 Regional races. She also presented the results of the 2007 Runoff volunteer survey. Information from the survey is being incorporated in plans for improvement to the event in 2008. She gave an update on the Spec Miata compliance program.

RISK MANAGEMENT

Pete Lyon reported on the status of current litigation. He also discussed the current insurance environment.

CLUB RACING BOARD LIAISON – Bob Lybarger & Jerry Wannarka

CRB Conference Call – January 7, 2008
The Call went well, with all attending.

They discussed the class consolidations for the future and they asked for the input from the BOD as to how many classes they should count on. I told them that the way I read the BOD we are still looking at a maximum of 24 classes and in the future there is a need to cut it down further. I hope I have read this correctly.

They passed many agenda items and will be bringing them forward for us at the convention. They are also looking forward to a productive meeting with us.

They are working on the following items;

1. How many classes to the Runoffs
2. The diffuser transition time line and wording for the C6 GTI front and rear airfoils, and under trays.
3. Zetec FC engine updates

The meeting went 5.5 hours.

SOLO EVENTS BOARD LIAISON - Bob Introne, Lisa Noble, Liaison

The SEB has been finalizing its advisory committee appointments. Good discussion and care goes toward those appointments. There are 12 committees and usually 3 to 7 members of each. In order to get a clearer vision, the SEB has asked the 10 advisory committees to work on updating the philosophy or guideline of their area as it has been a while since this was last undertaken.

The SEB is asking that these papers meet the Core Values from the Solo Rules and as stated below:

I.2.3 Core Values
The SEB's decisions are based upon three core values that together equate with member value. These core values are as follows: increased participation and involvement, providing a variety of classes to satisfy a range of economies and commitments, and evolving rules in a planned manner. Each topic before the SEB is compared to these core values to ensure an overall positive effect. It is recognized that an individual decision may at times result in a disadvantage or increased cost to some individual members, but that the decision reached is based on the long-term benefit for the majority of the members.

They are also updating their Appeals Committee to bring in Committee members who are not SEB members.

TIME TRIALS ADMINISTRATIVE COUNCIL LIAISON - Lisa Noble

TTAC has finished the 2008 Time Trials Rules. It should be in the hands of the BOD as of the Convention. There are significant changes as the TTR have been broken into four self standing sections corresponding to the four types of TT events, PDX, Club Trials, Track Trials and Hill Climb. The goal is to improve readability and usability.

The TT Ops Manual is in its planning stage. TTAC will have an outline to work on during Convention work sessions. The Ops Manual will deal with more nut and bolt, - how to put on an event - items.

Matt Rowe, the newly appointed TTAC Chairman, is also setting out goals for the Council. They will also work on developing these goals during the Convention.

1 year – Improve readability of the TTR and develop operations guide to help events apply the rule book to actual event operation.
3 year – Develop the PDX instructor program with guides for instructor training, clarify skills students should learn and provide documentation for the events to draw from.
5 year – Ensure alignment with both our customer base (current and potential members) and that there continues to be a logical place for time trials between solo and club.

CLUB RACING BOARD

Bob Dowie, reported on plans for the 2008 season including the 2008 Runoffs.

MOTION: To approve the following changes to the GCR as recommended by the Club Racing Board. (Lybarger/Wannarka) PASSED

GCR

Item 1. Effective 1/1/08: Correct the first Note of section 9.1.12 to read as follows:
Note 1: For the purposes of this section, "entrants" shall be defined as drivers classified in the final official race results of National races as finishers, did-not-finish (DNF), *did-not-start (DNS),* or disqualified (DQ). ~~Drivers classified as did-not-start (DNS) shall not count as entrants.~~

Formula/Sports Racing

Item 1. Effective 2/1/08: Add the following before the last sentence of the first paragraph in section 9.4.5:
Closed cockpit sports racer cages may be constructed in accordance with 9.4. ROLL CAGES FOR GT AND PRODUCTION BASED CARS
(December 4 minutes, published January Fastrack)

Item 2. (FV) Effective 2/1/08: Change section 9.1.1.C.3.a.8 as follows:
The rubber portion ~~only~~ of the bump stop and *any portion or all of the bump stop horn* may be ~~alterned or~~ removed *up to its base at the beam upright*.
(December 4 minutes, published January Fastrack)

Item 3. (SRF) Effective 2/1/08: Change section 9.1.9.C.5.k by creating a new section l. for the third paragraph to read as follows:
l. Required Bodywork Modification:
A 22.5" diameter wheel arch ~~may~~ *shall* be cut in each side of the tail section. Viewing the tail section from the side, draw a vertical line at the drive axle centerline. Locate the top of the wheel arch at a point measured from the bottom edge of the tail section 9.25" vertically along the centerline. The 22.5" diameter circle intersects the bottom edge of the tail section 11.1" either side of the centerline. The tail section may be reinforced in the forward and aft portions of the wheel arch. Dimension tolerance is +/- 0.75".
(December 4 minutes, published January Fastrack)

Grand Touring
GT1
Item 1. Effective 2/1/08, add new section 2. to section 9.1.2.D.3.d to read as follows:
2. Mid-engine vehicles may use an electric water pump.
(November 2-3 minutes, published December Fastrack)

Item 2. Effective 2/1/08, change section 9.1.2.D.8.a.11.6 to read as follows:
Wing mounting specs: The entire wing assembly must be mounted ~~at least 2.00 inches~~ below the peak of the roof (measured at *the highest point of the roof* ~~vehicle centerline~~). Trailing edge of wing assembly must be located within an area defined by a point; 6" forward of rearmost bodywork and the rearmost bodywork (measured at vehicle centerline). Two wing mounting posts must be used, with each one located between 16"-20" inboard from end of wing. *The wing mounting posts shall not exceed 85 square inches each.* Max. wing angle from horizontal is 30-degrees.
(November 2-3 minutes, published December Fastrack)

Item 3. Effective 2/1/08: Change section 9.1.2.F.4.b.13 as follows (portions omitted remain unchanged):
A spoiler *or a Club Racing specified rear wing for GT2* may be fitted to the rear of the car. Note: O.E.M. rear spoilers and wings are note permitted unless specifically listed on the vehicle's specification form.
If a spoiler is used, it shall be contiguous with the bodywork and shall comply with the following:
(Existing sections 9.1.2.F.4.b.13.a-d)

If a Club Racing specified wing is used (GT2 only), it shall comply with the following:

> *E. Specifications: Unmodified single element Liebeck airfoil #1LD104E scaled to a chord length of 10.75 inches. The maximum cross-sectional tolerance of the wing profile is 0.060 inch. A maximum 0.50 inch Gurney tab is allowed at the trailing edge of the wing element. The tab must be mounted 90 degrees to the upper wing surface. No air may pass between the tab and the wing. The wing end plates must fit within a rectangle measuring 11.00 inches long by 4.00 inches tall. No portion of the wing element or tab may extend beyond the perimeter of the endplate. The endplates must be mounted parallel to the vehicle centerline, and must be perpendicular to the ground. Endplates must be flat, with no curvature or Gurney tabs. The maximum width of the entire wing assembly (wing element, endplates, Gurney tab, and mounting hardware) is 68.00 inches, but no wider than the rear body width including fender flares.*

F. Wing mounting: The entire wing assembly must be mounted below the highest point of the roof or roll cage main hoop whichever is higher measured at the highest point. The trailing edge of the wing assembly must be located within an area defined by a point; 6" forward of rearmost bodywork and the rearmost bodywork measured at vehicle centerline. Two wing mounting posts must be used, with each one located between 8"-20" inboard from end of wing. The wing mounting posts shall not exceed 85 square inches each. The maximum wing angle from horizontal is 30-degrees.

(December 4 minutes, published January Fastrack)

Item 4. Effective 2/1/08: Change section 9.1.2.F.4.b.12 as follows:
A spoiler may be fitted to the font of the car. It shall not protrude beyond the overall outline of the car as viewed from above except in GT2 where a front splitter may extend up to *three* (*3*) inches. In all classes, the spoiler shall not extend aft of the forward most part of the front fender opening (cutout), and shall not be mounted…
(December 4 minutes, published January Fastrack)

Spec Miata
Item 1. Effective 2/1/08, add a new section 3. to section 9.1.8.C.1.e to read as follows:
3. *The post catalytic converter oxygen sensor may be disabled, replaced, or removed; the resulting hole (if present) may be plugged.*
(November 2-3 minutes, published December Fastrack)

MOTION: To approve the following reclassifications as recommended by the Club Racing Board. (Sauce/Creighton)PASSED Unaimous

Production
Item 1. Effective 3/1/08, reclassify the 90-93 Acura Integra to FP at a weight of 2235 lbs.
(November 2-3 minutes, published December Fastrack)

Item 2. Effective 3/1/08: Reclassify the EP Lotus 7 series 4 to FP at 1,810 lbs.
(December 4 minutes, published January Fastrack)

Item 3. Effective 3/1/08: Reclassify the EP Volvo 142/142E to FP at 2,150 lbs.
(December 4 minutes, published January Fastrack)

Item 4. Effective 3/1/08: Reclassify the FP Volvo 142/144 to GP at 2,100 lbs.
(December 4 minutes, published January Fastrack)

Item 5. Effective 3/1/08: Reclassify the EP Lotus Europa to FP at 1,630 lbs.
(December 4 minutes, published January Fastrack)

Item 6. Effective 3/1/08: Reclassify EP Elva Courier to FP with the 1800cc engine at 1,900 lbs and 1.5 inch carbs, and the 1600cc at 1,800 lbs.
(January 8 minutes, published February Fastrack)

Item 7. Effective 3/1/08: Reclassify the EP 88-91 Civic Si and CRX Si to FP at 2,075 lbs.
(January 8 minutes, published February Fastrack)

TIME TRIALS BOARD
Mat Rowe reported on 2007 operations and plans for 2008.

EXECUTIVE STEWARDS

Ken Patterson reported on the track review process.

SOLO EVENTS BOARD

Tina Reeves reported on plans to continue the growth of the program into 2008, as well as activities related to site acquisition.

RALLYCROSS BOARD

Mark Walker presented the RallyCross Strategic plan, activities for 2008 that support the plan.

ROAD RALLY BOARD

Kevin Poirier reported on the successes of 2007 and focused on plans for continued growth in 2008 and 2009.

SCCA FOUNDATION – LARRY DENT

Contributions continue to come in from members building the funds available for the Street Survival program and other Foundation needs. I will present the exact figures at Convention.

Staff and I have been working on a Foundation brochure that can be used by regions for promoting regional Street Survival events, as well as an overview of the Foundation in general. I feel this has been badly needed, not only for SS regional promotions, but also for fund raising within the non SCCA Community. I will have a close to final proof to show at Convention but not for general distribution until all the photo releases are signed.

Our plan is to have a DVD with the brochure in several forms, printable by a commercial printer, and by a local region on a color copier. In that way distribution can take on any necessary form, both in terms of available assets and quantities.

The test SS program went well in 07. SS programs were run all around the country and most of the potential issues were worked out and we seem ready for a national roll out.

My caution on this is this. The powers that be have predicted and hoped for 20 SS events nationwide in 08. If my gut feeling is anywhere near correct we may well have MANY more than this. With over 112 regions, if each runs only 1 you do the math. Fort Wayne Region did 2 pilot events in 07 and already has sponsors and locations for at least 3, and possibly as many as 6 events in 08. Again, you do the math. Your choice of numbers.

We sent my fund solicitation letter last month, and the first response was a $5,000 contribution. Hopefully the responses will continue for several months.

OLD BUSINESS
NONE

NEW BUSINESS

R David Jones presented ideas relating to additional volunteer recognition.

MOTION: To authorize the Rally/Solo department to continue the pilot program for Drifting events for the 2008 season. (Noble/Allen) PASSED Unanimous

MOTION: To approve Zbigniew Lorenc as RallyCross Steward for Great Lakes Division effective immediately. (Allen/Sauce) PASSED Unanimous

MOTION: To approve a provisional charter for Puerto Rico Region. (Jones/Introne) PASSED Unanimous

MOTION: To exempt one legitimate charity event per Region each year from the five dollar charge for weekend membership, and to instruct staff to make the necessary changes to the Operations Manual to reflect this policy. (Allen/Lybarger) PASSED Unanimous

MOTION: To waive the provisions of GCR Section 3.9.1.F to allow Tony Ave to change his Region of record, from SEDiv to NPDiv. (Creighton/Jones) PASSED Abstaining, Creighton, Sauce

MOTION: To waive the provisions of GCR Section 3.9.1.F to allow Richard Sleeper to change his Region of record, from SEDiv to SWDiv. (Jones/Dent) PASSED Unanimous

MOTION: To waive the provisions of GCR Section 3.9.1.F to allow Jim Christian to change his Region of record, from RMDiv to SPDiv. (Porterfield/Dent) Voting NO, Jones, Allen, Abstaining, Gordy, Sauce, Christian

MOTION: The Board of Directors recognizes the Great Lakes Division as an association of Regions into an intermediate organization as outlined in the SCCA bylaws Article VII, Section 6, and that they may organize themselves into councils or committees as outlined in the Operations Manual Section I.2.C.2.1. (Dent/Sauce) PASSED, Abstaining, Noble

MOTION: The SCCA Board of Directors commends Bob Wildberger and his staff on the financial success of SCCA Pro Racing in 2007, and is supportive of the their plans for the future success of Pro racing. (Jones/Allen) PASSED Unanimous

MOTION: The Board of Directors confirms that only the top 24 classes and GT3 (with a waiver for 2008) will be eligible for invitation to the 2008 Runoffs. (Sauce/Dent) PASSED Voting NO, Jones

MOTION: To take the Jones/Christian motion out of executive session and to place the motion in the minutes of the meeting (Dent/Allen) PASSED Unanimous

MOTION:
1. To form a task force composed of two members of the CRB, two members of the Staff, and three Board members, to gather information meet and develop a plan for national racing and its championship. The task force shall submit its results by March 31.

2. At its May meeting, or earlier, the Board of Directors will select one plan, to be implemented effective with the next Fastrack publication.

a. Selection of any plan will require at least nine affirmative votes of the Board of Directors.
b. The Board of Directors will publish the plan, with a full explanation of the goals and reasons, and will commit to the essence of the program for three years.

(Jones/Christian) PASSED Unanimous

MOTION: To approve the following change to the RallyCross Rules as recommended by the RallyCross Board. The Board recognizes that this change is necessary to reflect current practice, and was previously overlooked when this rules set created. (Allen/Wannarka) PASSED Unanimous

6.2.E.17 Batteries may be substituted with any type. Relocation of the battery or batteries is permitted. Longer battery cables may be substituted to permit relocation and holes may be drilled to accommodate mounting of the battery and cables.

MOTION: To adjourn. (Lybarger/Dent) PASSED.

Respectfully submitted,

Jim Christian
Secretary

CLUB RACING BOARD MINUTES

CLUB RACING BOARD MINUTES | *Feb. 6-10, 2008*

The Club Racing Board met face-to-face in San Antonio, TX, February 6-10, 2008. Participating were Bob Dowie, Chairman; Chris Albin, Stan Clayton, Dave Gomberg, Peter Keane, and Russ McHugh. Also participating were Terry Ozment, Vice President of Club Racing; John Bauer, Technical Assistant Club Racing; and Lauri Burkons, CRB Secretary.

In addition to those items covered in Technical Bulletin 07-03, the following decisions were made:

PROPOSED RULE CHANGES OR CAR RECLASSIFICATIONS

The following subjects will be referred to the Board of Directors for approval. Address all comments, both for and against, to the Club Racing Board. Comments may be e-mailed to crb@scca.com.

GCR

Item 1. Effective 11/1/08: Add the following to section 6.2.2.J.2:

Note: If a car leaves the course during the pace lap(s), all drivers in the column behind that car shall close up behind the cars in front of them to satisfy 6.2.2.G. Moving up under these circumstances is not considered as improving position or passing under yellow.

Item 2. Effective 11/1/08: Add a new item 3 to section 7.4.A and renumber the subsequent items:

3. Loss of event points 1 point

Item 3. Effective 11/1/08: Add the following after the third sentence of section 8.1.4:

The CRB will provide input to both courts before either court reaches its decision.

Item 4. Effective 11/1/08: Change section 8.4.6 as follows:

... Penalties involving time, disqualification, or loss of points shall be made effective from the date of the conclusion of the event involved. ~~Penalties involving suspension shall be made effective from the date of the COA decision.~~ *If the Court of Appeals affirms a suspension penalty imposed by the first court or determines that a suspension penalty should be added, the COA will determine the date on which the suspension penalty begins.*

Item 5. Effective 11/1/08: Change the fuel standard table in section 9.3.25.A and add a new introductory paragraph as follows:

Competitors in all classes except those in the Showroom Stock may choose any fuel that complies with the fuel standards table. Showroom Stock competitors must use a fuel that allows vehicles to remain EPA compliant.

Fuel Standards

~~Classes~~	Type	DC max	~~Reagent A~~
~~All Prepared, FB, FE, SS, SM, T, IT, SRF, and Old SR, and Elan spec DP 02 running as CSR~~	~~Gasoline w/no added oil~~	~~15~~	~~N/A~~
~~All other classes (incl. 2 cycle w/oil injection)~~	~~Gasoline w/no added oil~~	~~0~~	~~No pos.~~
~~All 2 cycle w/o oil injection~~	~~Gasoline w/oil mixture~~	~~2~~	~~No pos.~~
All ~~rotary~~ engines	Gasoline w/ or w/o oil mixture	15	~~N/A~~

Item 6. Effective 11/1/08: Change section 9.3.25.B Fuel Sample Acquisition as follows:

~~All cars shall be equipped with an easily accessible sampling valve/port located between the fuel tank and the carburetor(s) or fuel injectors to facilitate acquisition of fuel samples. To avoid fuel spillage, the fuel sampling valve/port shall not consist of removing a fuel line from any fuel system component unless a dry break fitting has been installed. A capped and/or sealed "T" may be fitted inline, or a capped and/or sealed auxiliary sample port may be fitted to a fuel system component (carburetor, fuel rail, etc.) without using a dry break fitting. Under no circumstances is siphoning of fuel from the fuel tank/ cell acceptable.~~

~~If possible, the sampling valve/port should not be located in the engine compartment. Cars equipped with a factory fuel pressure test port (e.g. fuel injected SS, T, IT, SRF, etc.) or competitors having factory fuel pressure test equipment available, are not required to have~~

~~an additional fuel sampling port. On all other cars, to avoid fuel spillage it is recommended that a valve or dry-break fitting be installed in the fuel line. In all cases competitors shall provide the appropriate tooling necessary to safely obtain the fuel sample. A manned fire extinguisher shall be present whenever fuel samples are being acquired.~~

All cars shall be equipped with an accessible sampling port/valve/device located in a fuel line between the fuel tank or fuel cell and the carburetors or fuel injection system to allow safe acquisition of a fuel sample. If possible, the port/valve/device should be located outside the engine compartment. The sampling port/valve/device will be installed and used by the competitor to obtain the sample without fuel leaking, spraying or squirting. Siphoning of fuel directly from the fuel tank or fuel cell or removing a hose or line is not allowed.

Competitors whose cars are equipped with a factory fuel pressure test port or who have factory fuel pressure test equipment available are not required to have an additional fuel sampling port, providing the test port is accessible and the competitor obtains the sample without fuel leaking, spraying or squirting.

Competitors will provide all the necessary and appropriate tools to obtain a fuel sample.

A tech observer and manned fire extinguisher will be at the car at the time the sample is taken and the competitor will name the fuel brand and type for notation on the sample bottle label.

Item 7. Effective 11/1/08: Change section 9.4.D as follows:

Two side tubes connecting the front and ~~rear~~ *main* hoops across both door openings are mandatory. NASCAR-style side protection or one bar bisecting another to form an "X" is permitted. Door side tubes may extend into the *front* door…

Formula

Item 1. (FC) Effective 11/1/08: Change the last sentence of section 9.1.1.B.4.a as follows:

~~Camshaft timing is unrestricted.~~ *Required camshaft timings are as follows:*

Intake centerline 116-117 degrees ATDC

Exhaust centerline 106-107 degrees BTDC

Item 2. (FC) *Effective 11/1/08: Change section 9.1.1.B.4.b as follows:*

Pistons, crankshaft, and rods may be replaced only with standard original Ford replacement parts. The crankshaft may ~~not~~ be ground or polished *for the purpose of installing oversize main or rod bearings*~~ in any way and must have stock dimensioned main and rod bearing journals~~. The rod journals must remain stock and the rods may not be bored or remanufactured in any way. The rod and crankshaft bearings may be replaced only with original *or over*sized Ford bearings. ~~Oversize bearings are not permitted.~~ The required *original* crankshaft main bearing journal dimension is 2.282-2.283 inches and the required *original* crankshaft rod journal dimension is 1.846-1.847 inches. *The corresponding main journal dimensions for oversized bearings are either 2.273-2.274 inches or 2.263-2.264 inches; the corresponding rod journal dimensions for oversized bearings are either 1.837-1.838 inches or 1.827-1.828 inches.*

Item 3. (FC) Effective 3/1/08: Change sections 9.1.1.B.4.j, k, and l as follows:

Change 9.1.1.B.4.j to read as follows:

ECU: The Pectel T2 unit is required. The current specification "QSRE" map is required with the QSRE intake package *or the current specification "EPP" map is required with the EPP intake package.* Failure to use the current map appropriate to the intake package will result in an automatic penalty of 1 year suspension from SCCA club racing. The maps are available at the SCCA web site.

Change 9.1.1.B.4.k to read as follows:

Intake manifold and fuel injection components: One of the following intake packages must be used.

1. The Quicksilver RacEngines (QSRE) #0138 intake manifold and throttle body combination, air horns, fuel rail and injector system are required and must be used with no modifications of any kind. Only stock Ford fuel injectors may be used and they may not be modified in any way. Fuel injectors may be replaced only with stock Ford injector part number #0280155887 XS4U-AA.

2. The Elan Power Products (EPP) DP08-60-002 intake manifold and throttle body combination, air horns, fuel rail and injector system are required and must be used with no modifications of any kind. Fuel injectors may be replaced only with stock Ford injector part number #0280155887 XS4U-AA.

No interchange of components between the approved intake packages is allowed. The appropriate map must be used with each package (see j above). The appropriate intake restrictor must be used with each package (see l below).

Change 9.1.1.B.4.l to read as follows:

Intake restrictor. One of the following intake restrictors must be used.

1. The QSRE #1975 intake restrictor must be used with the QSRE intake package (see j above). It must not be modified in any way. The restrictor internal diameter is 1.295 inches and this value cannot be exceeded in any measurement

of the diameter. The restrictor port centerlines or shape may not be altered.

2. The EPP DP08-60-012 intake restrictor must be used with the EPP intake package (see j above). It must not be modified in any way. The restrictor internal diameter is 1.295 inches and this value cannot be exceeded in any measurement of the diameter. The restrictor port centerlines or shape may not be altered.

Item 4. (FV) Effective 11/1/08: Change selected portions of section 9.1.1.C.2 as follows:

Track, rear: ~~*49 13/16 1/8" + 7/8" - 5/8" 50 3/4" maximum*~~ *49.125 " minimum, 50.750" maximum (no spacers allowed)*

Item 5. (FB) Effective 11/1/08: Change section 9.1.1.H.2.E as follows:

Brackets for mounting components, such as the engine, transmission, suspension pickups, instruments, clutch and brake components, and body panels may be ~~nonferrous~~ *ferrous, aluminum alloy, or magnesium alloy* of any shape, and fastened to the frame in any manner.

Item 6. (FB) Effective 11/1/08: Change section 9.1.1.H.9.A as follows:

All suspension components shall be of steel or ferrous material, except that hubs, hub adapters, hub carriers, bell cranks, pivot blocks, bearings and bushings, spring caps, abutment nuts, anti-roll bar links, shock absorber caps, and nuts may be aluminum alloy *or magnesium alloy*.

Item 7. Effective 1/1/09: Add new subsection I to section 9.1.1 as follows:

I. Formula First Preparation Rules

1. Definition

1.1. Formula First is a class for single seat racing cars based on components from the standard Volkswagen Types 1 sedan, as originally manufactured by Volkswagen from 1966 to 2004. Since it is a restricted class, all allowable modifications are stated herein. The purpose of the Formula First class is to emphasize driver ability and to encourage the participation of owner/builders and owner/preparers while using proven Volkswagen components (or exact replicas). Homologation is required for all cars registered after January 1, 1983. Homologation for FS classification is required on all Formula First cars.

1.2. **No component of the engine, power train, front suspension, or brakes shall be altered, modified, or changed, or be of other than VW manufacture (or an exact replica thereof), unless specifically authorized herein. Parts used are classified as original, made by VW parts, exact replacement parts usually bearing a VW part number used in the VW model range specified below. Finally, mass-produced direct replacement parts can be substituted for the original components if authorized in the rules. These direct replacement components must be constructed of original material(s) or an acceptable substitute, maintain the original function(s) and general dimension(s) of the VW components they replace. Furthermore, these replacement parts must be generally available to all competitors and offer no competitive advantage over the original VW parts. There are no exceptions. IF IN DOUBT, DON'T.**

1.3. Any VW Type 1 component, of VW manufacture or an exact replica in size, shape, and material, may be used unless a specific part (VW or aftermarket) is specified.

1.4. All measurements given in these rules are exact unless a specific tolerance is stated. A car exceeding any measurement or outside a tolerance, BY ANY AMOUNT is not in compliance.

1.5. Any external surface of the suspension, brakes, and transmission/rear axle tubes may be painted, plated, or anodized.

1.6. Weights and Measurements.

1.6.1. Minimum weight, as qualified or raced, with driver: 1125 pounds

1.6.2. Wheelbase minimum 81.5"; maximum 85.5"

1.6.3. Front track maximum: 57" at zero camber & toe

1.6.4. Rear track maximum: 55" at zero camber & toe

1.6.5. Overall length: Maximum 140" (includes exhaust)

2. Suspension

2.1. Front Suspension.

The front suspension shall be standard VW Type 1 sedan ball joint H-beam front suspension or an exact replica of one of them and dimensionally identical. The following modifications are permitted:

2.1.1. Lugs may be welded, brackets attached by welding or otherwise, and holes drilled in the ball joint H-beam to permit attachment of the beam to the chassis, and other components wholly or partially to the beam. Brackets may be welded to the torsion arms for the sole purpose of actuating the shock(s) and/or external mounted anti-roll bar and shall perform no other function.

2.1.2. Front spring(s) are unrestricted except that the front suspension lifting spring(s) must be a continuous unit measuring 37.63" (+ or - .13") in length, is completely housed internal of the torsion spring tube(s), and fit unaltered control arm spring sockets.

2.1.3. Removal of the shock towers above the upper H-beam tube centerline.

2.1.4. Relocation of the shock dampers is permitted. Shock dampers and their actuation are free providing that no VW components

are altered, modified or changed unless specifically authorized herein. Bump rubbers with a maximum length of 2 ½" may be used to protect the shock(s)/chassis from bottoming. Use of related bump rubber packing washers/solid spacers is free. Coil spring mounted (coil-over) shocks are not permitted.

2.1.5. The use of any anti-sway bar or bars, internal or external, mounting hardware, and trailing arm locating spacers. The anti-sway bar fitted as part of the standard suspension may be removed. Sway bars may not be cockpit adjustable. Front suspension Z-bars are not permitted.

2.1.6. Replacement of torsion bar rubbers with spacers of another material.

2.1.7. Installation of ride height adjuster(s), constructed for use with standard VW spring packs, to the H-beam allowing rotation of the spring pack. One (1) ride height adjuster per torsion spring tube is permitted. No cockpit adjustment of ride height is permitted.

2.1.8. Removal of the brake backing plates.

2.1.9. Camber/caster eccentric adjusting nut may be replaced with an aftermarket nut of different design. Caster, camber, and toe-in are free.

2.1.10. Any wheel bearings that fit the VW type 1 spindles and disk brake hubs without modification may be used.

2.1.11. Steering column may be altered or replaced. Steering wheel is free, and may be detachable. Steering mechanism is free, but tie rods must attach to the spindle using existing steering arm, a modified steering arm, or a suitable new or modified bracket welded to the spindle. Ball joints in the tie rods may be replaced with rod ends.

2.2. Rear Suspension

2.2.1. The rear axle and tube assembly shall be standard VW Type I up to 1966, sedan swing axle (no outer pivot point for a half shaft) with axle location provided by a single locating arm on each axle. The rear axle tube may be rotated about its axis. The standard shock mounting and brake pipe brackets may be removed. Rear axle O.A. length: 26 11/16" + or – 1/8"

2.2.1.1. The rear axle bearing retainer flange mating surface may be machined, or shims may be installed under the rear axle bearing, for the sole purpose of adjusting bearing axial float.

2.2.2. Springs, shock dampers, their actuation, and camber compensating devices are free.

3. Braking System

3.1. Standard VW Type 1 disc brake components must be used, including any standard VW Type 1 original or aftermarket direct replacement brake caliper constructed of cast iron material. Front rotor minimum weight: 13.0 lbs. each without wheel mounting studs.

3.1.1. Caliper housing material may be removed on the outer radius surface of the outer piston housing to clear the inside of the rotating wheel. This metal removal shall only be to allow wheel clearance.

3.2. Any type pad material may be used on standard VW Type 1 brake pads.

3.3. Adapter plates may be fitted to allow mounting of front or rear brake calipers.

3.4. Cross-drilling or grooving of rotors is not permitted.

3.5. Rear brake drum assemblies must be removed and replaced with one-piece cast iron rear brake rotors with machined-in rear axle splines. Caliper mounting is free. Min. rotor weight: 15.0 lbs each, without wheel mounting studs.

3.6. The car shall be equipped with a dual braking system operated by a single control. In case of a leak or failure at any point in the system, effective braking power shall be maintained on at least two wheels.

3.7. A separate hand brake is not required. Removal of the hand brake and operating mechanism is permitted.

3.8. Brake lines may be of any suitable material, including steel braided lines.

3.9. Wheel mounting lug bolts may be replaced with studs.

3.10. All brake components must remain within the safety tolerances and minimum dimensions established by the component manufacturer.

3.11. Rear drum brakes on existing homologated Formula First cars will be allowed until 1/1/09

4. Wheels and Tires

4.1. Wheels shall be 13" diameter by 6" wide. (+ or – 1/8" for all dimensions)

4.1.1. Wheels must be of one-piece construction and may be constructed of steel, aluminum, or magnesium, but each wheel must comply with a minimum weight of 10 pounds, less tire, wheel weights and valve stem assembly.

4.1.2. Wheel bolt pattern is free, except that it must use 4 lug bolts or studs with lug nuts. No centerlocks. As a recommended standard, the common bolt pattern for Formula First is 4"x 4 bolt.

4.1.3. Spacers between the wheel and rotor are permitted.

4.2. Tires shall be Formula Ford slicks in standard front and rear sizes and using a hard compound. The Region, Division and/or rac-

ing series sanctioning the races shall specify which manufacturer or manufacturer's tires meeting this general description shall be permitted.

Regional, Divisional and/or Race Series Tire Options:

4.2. 1. Option 1. The spec tire manufacture for Formula First shall be Hoosier Tire. Front tires shall be #43130 20.0"x 6.0" – 13" R60 or R60A compound. Rear tires shall be #43302 22.5"x 7.5"– 13" R60 compound or #43307 22.5" x 7.2" x 13" R60A compound.

4.2.2. Option 2. The spec tire manufacture for Formula First shall be Goodyear Tire. Front tires shall be #807-366-068 3321 20.0"x 6.0" – 13" R600 compound. Rear tires shall be #870-274-068 2015 22.5"x 7.5"– 13" R600 compound.

4.2.3. Option 3. The spec tire manufacture for Formula First shall be American Racer Tire. Front tires shall be 20.0"x 6.0" – 13" 133 compound. Rear tires shall be # 22.5"x 7.5"– 13" 133 compound.

4.2.4. Inter divisional races or special events may choose to allow more than one tire option by listing the options allowed for said event in the event supplemental regulations.

4.3. Any tires (brand, size, tread or construction) fitting the 13 x 6 rims may be used when the Chief Steward declares a rain race.

5. Engine

5.1. The engine shall be the standard VW "1600" (1584 cc) twin port, unless otherwise stated in these rules.

5.1.1. Engine components shall be assembled in standard configuration. Exceeding the wear limits specified in the VW manual or in other official VW guides is permitted provided that the specifications, tolerances, and dimensions specified in these rules are not exceeded.

5.1.2. Standard engine reconditioning practices are permissible as set out below. Such machining shall occur on the same plane as original VW specification. It is not permissible to add metal or any other material to any engine component, unless specifically stated herein.

5.1.3. Balancing of the following moving parts of the engine is allowed: pistons, connecting rods, crankshaft, flywheel, front pulley, and clutch disc and clutch cover. Balancing may not remove more material than is necessary to achieve the balance, except on those component parts where minimum weights are specified herein. The addition of weight to the clutch cover plate, for the sole purpose of achieving balance, is permitted.

5.1.4. Polishing of the contact faces of moving parts is permitted.

5.2. 1584 cc engine dimensions

Bore 85.7 mm maximum

Stroke: 69.1 mm maximum

Exhaust valve diameter: 32.06 mm maximum

Intake valve diameter: 35.56 mm maximum

Intake port dimension at head: 33 mm maximum

Exhaust port dimension at head: 33 mm maximum

Intake manifold horizontal inside diameter: 32 mm maximum

Manifold casting maximum diameter at flange: 33 mm maximum

Maximum valve lift: .455". Measured at Valve cap with 0" lash. An average of the four exhaust valves must be .455" or less and an average of the four intake valves must be .455" or less.

Rod weight with bolt and small end bushing: Minimum 570 grams. Rod length, center to center: 5.35" to 5.45". Any piston rod may be used that meets the VW dimensional and weight specifications listed herein.

Piston weight with pin: Minimum 515 grams.

Minimum distance: Top of piston to top edge of #1 ring groove: 8.0 mm

Crankshaft weight: 20 pounds minimum

Flywheel: Clutch diameter 200 mm; weight - 12 pounds minimum

Deck height: .045" minimum

Cam followers: 90 grams minimum

Rocker arms: 80 grams minimum (w/o adjuster)

5.3. Crankcase, Clutch and Flywheel

5.3.1. Any 1200 or 1600 VW case or exact replica may be used. (Aftermarket competition cases that vary in design from the original VW case are not permitted.)

5.3.2. Standard reconditioning of the case halves is permitted.

5.3.3. The case may be drilled to accept an external oil cooler or oil filter.

5.2.3. Generator/alternator, stand, and fan housing and fan may be removed.

5.3.4. Oil baffles may be installed. They must be housed completely within the original oil sump and crankcase.

5.3.5. An oil temperature sending unit may be installed in the crankcase.

5.3.6. Oil galley plugs may be replaced with threaded plugs.

5.3.7. Cylinder head studs may be replaced with studs of different material.

5.3.8. The crankshaft may be ground and the case may be machined to accommodate the use of the standard VW oversize/undersize crankshaft bearings, provided the crankshaft location is not changed. It may also be machined to permit installation of camshaft bearings.

5.3.9. The use of an aftermarket counterweighted crankshaft with standard VW stroke, index and journal sizes is mandatory. Bearings may be standard VW undersized/oversized and rods ground to accommodate them.

5.3.10. Crankshaft front pulley is free.

5.3.11. The flywheel may be lightened to a minimum of 12 pounds. Flywheel dowels may be reconditioned. Additional dowels may be added on the same face. The flywheel clutch plate surfaces may be machined.

5.3.12. Any 200 mm VW clutch disc, pressure plate and throwout bearing (or replacement replica) as fitted to the VW Type 1, 2 and 3 are permitted. The standard VW clutch actuation arm may be modified to allow its attachment to the standard VW clutch throwout bearing shaft in any appropriate position. Clutch shaft arm actuation (cable, levers, or hydraulic) is free.

5.3.13. Oil filler/engine vent(s), dry sump tank and catch tank(s) are unrestricted provided they meet SCCA GCR 17.26. (pg 92)

5.3.14. **The installation of a crankshaft pulley oil seal is permitted.**

5.3.15. **The installation of case center main web location pins or shuffle pins are permitted.**

5.4. Camshaft.

5.4.1. Only the Engle W110 camshaft is permitted. Specifications listed herein are for checking purposes only. Re-grinding of the Engle W110, or any camshaft, to meet or maximize these specifications is strictly prohibited.

Cam lift: Exhaust and Intake .392” variance + .003”

Lobe centers: 108 deg +/- 30 sec.

Intake opens @ 19 deg. Intake closes @ 48 deg. (at .050” valve lift) (+/- 30 sec)

Exhaust opens @ 55 deg. Exhaust closes @ 12deg. (at .050” valve lift) (+/- 30 sec)

5.4.2. Cam timing (advance/retard) may be achieved by offset keys or adjustable cam gear. Cam timing may not be adjustable without disassembling the case. No form of VTEC, cockpit adjustment, or other variable cam timing is permitted.

5.4.3. Cam gear must be of stock dimensions, including angle and width of teeth.

5.4.4. Cam followers may be reconditioned and/or may contain camshaft face lubrication holes.

5.5. Pistons and Cylinders.

Pistons and cylinders shall be standard VW replacement parts or exact replicas. Any piston rings that can fit the standard grooves are permitted. Piston pin retaining clips may be replaced with Teflon buttons.

5.6. Cylinder Head

5.6.1. The standard 040 or 043 twin port cylinder head are the only heads permitted. A MOFOCO 040 head is also allowed. Other vendors may be added as requested, IF the castings are the same as an approved VW manufactured head along with dimensional items. (head cc’s, valve size location, etc.) The intent is to allow casting duplicates that may be of better quality (longevity), appearance, and/or price.

5.6.2. The intake and exhaust ports are to remain in as-cast condition, except that material may be removed for the sole purpose of matching/blending up to .75” from the intake flange mating point and up to 1” from an intake/exhaust valve seat.

5.6.3. The combustion chamber must hold a minimum of 47 cc, with valves in place.

5.6.4. Replacement of valve seats and valve guides with others of standard dimensions and material is permitted.

5.6.5. Valves and valve seats may not be reshaped. Valve to valve seat mating surface (figure 1) shall be cut as follows. The 45 deg valve seat width (figure 2) shall be maintained by cutting a 15 deg chamfer (figure 3) at the outside edge of the seat and a 75 deg chamfer (figure 4) at its inner edge. Seats cannot be refaced if too little material remains for a 15 deg chamfer to be cut without going beyond the boundary of the insert. If the chamfer extends to the head, the seat or the head must be replaced.

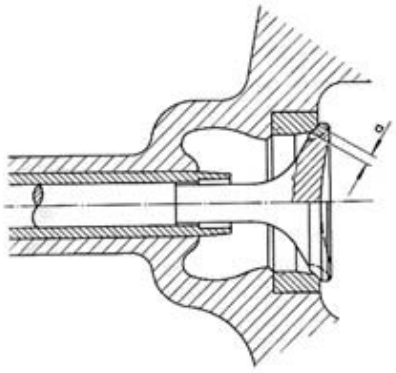

Fig 1

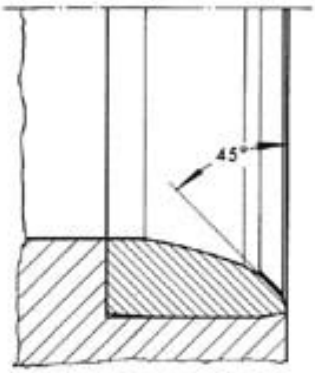

Fig 2

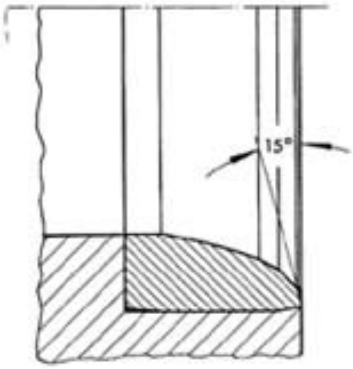

Fig 3

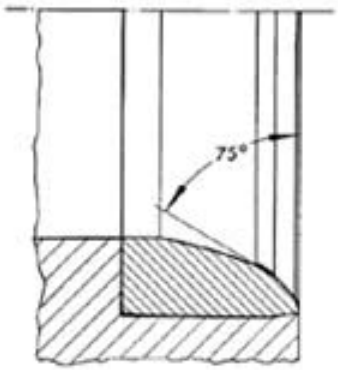

Fig 4

5.6.5.1. Valve specifications (figures 1 & 5):
Dimension "a" – valve seat contact width: Intake – 1.30 mm to 1.60 mm
Exhaust – 1.70 mm to 2.00 mm Seat contact angle on valve: 45 deg Intake and Exhaust
Dimension "A" – valve head dia: Intake – 35.56 mm max. Exhaust – 32.06 mm
Dimension "B" – valve length: 110.5 mm to 112.5 mm
Dimension "C" – valve stem dia: Intake – 7.94 mm min. Exhaust – 7.91 mm
Dimension "b" – valve head margin: Intake - .80 to 1.50 mm Exhaust – 1.00 to 1.70 mm
Dimension "d" – face angle of valve only: Intake - 44 deg Exhaust – 45 deg

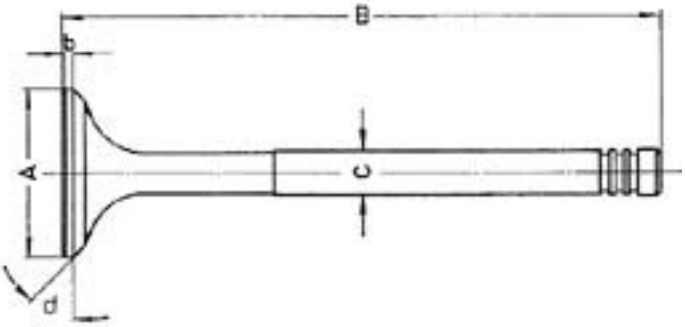

5.6.5.2. **Maximum allowable O.D. of intake seat - 40mm.**

Maximum O.D. of the 45 deg. angle on intake seat shall not exceed the outer diameter of the original VW intake seat (37mm). Maximum depth of replacement seat - 10mm.

Maximum allowable O.D. of the exhaust seat - 37mm.

Maximum O.D. of the 45 degree angle on the exhaust seat shall not exceed the outer

diameter of the original VW exhaust seat (34mm).

Maximum depth of replacement seat - 10mm

5.6.6. Stainless steel valves of the same dimensions as stock are permitted.

5.6.7. Single valve springs must be used, but are otherwise free except that no unauthorized modifications to other parts may be made to accommodate them.

5.6.8. Shimming of valve springs is permitted.

5.6.9. Combustion chambers are to remain in standard, as cast condition, except that fly cutting is permitted to obtain the permitted compression ratio. No other tooling or polishing of the combustion chamber is permitted.

5.6.10. Any aluminum or steel pushrod may be used. Length is free.

5.6.11. Only standard 1.1:1 ratio1600 rocker arms may be used. The two bars need to be visible. Minimum rocker arm weight listed under 5.2.

5.6.12. Wavy washers in the rocker gear may be replaced with solid washers.

5.6.13. Swivel-foot valve adjusters may be used, provided that they are on the same center plane as the standard screw and offer no increase in valve lift.

5.6.14. The rocker shaft posts may be shimmed to restore original geometry after authorized fly cutting.

5.6.15. Spark plug holes may be repaired using standard thread repair methods, such as Helicoil inserts, providing that the spark plug centerline is not changed.

5.6.16. Valve covers are unrestricted and may be bolted on.

5.6.17. Push rod tubes are unrestricted.

5.6.18. Any ferrous metallic valve spring retainers and keepers are permitted.

5.7. Oil system

5.7.1. Any standard VW Type I, or replacement replica in size, shape, and material, oil pump may be used. Oil pump pressure port plugging is permitted.

5.7.2. Any oil pump cover may be used.

5.7.3. A dry sump oiling system is permitted.

5.7.3.1. The dry sump pump must bolt into the standard location, must be driven by the camshaft and have no more that two stages.

5.7.4. A sump extension may be fitted using or in place of the oil strainer cover plate. The oil pump pickup pipe may be extended into the sump extension. The sump extension shall not extend below the lower frame members surrounding the engine.

5.7.5. Any oil cooler is allowed provided it is located within the bodywork and behind the firewall.

5.7.6. An alternate oil pressure regulator spring or springs may be used.

5.7.7. A standard or racing type automotive oil filter of not more than one-quart capacity may be installed provided it is located within the bodywork and behind the firewall. No cooling fins are permitted on the filter or connecting lines. Connecting lines shall not exceed 12 feet in total length, including oil cooler connections if part of the oil filter circuit.

5.8. Fuel pump

5.8.1. Fuel pump is free. A block off plate may be installed if the mechanical fuel pump is removed.

5.9. Carburetor.

5.9.1. Only the Mexican made Bocar 34 PICT/3 replacement carburetor shall be permitted. The carburetor shall be in “as new” condition. The carburetor may be cleaned with commercially available “carb cleaner”. NO MEDIA BLAST CLEANING IS PERMITTED. Original replacement replica gaskets, float, needle & seat may be replaced as needed. Float level may be adjusted via shim(s) under the needle & seat. Only the modifications listed herein are permitted. If you don’t see it listed herein, you can’t do it, NO EXCEPTIONS.

5.9.2. The choke plate, choke heater element and related components, choke shaft and related hardware may be removed and the shaft holes taped or plugged. Any air filter, air horn, or combination of filter and horn may be used.

5.9.3. Modification or removal of the idle shutoff solenoid to allow air/fuel flow without power is permitted.

5.9.4. Main fuel and air correction jet sizes are free.

5.9.5. The carburetor may be rotated 180 degrees about its vertical axis.

5.9.6. The choke heater element housing may be cut off the carburetor top housing.

5.9.7. The fuel inlet must be threaded into the carburetor top housing, the original brass swaged in fitting is not permitted.

5.9.8. Vacuum fittings may be removed and ports plugged.

5.9.9. The full throttle stop bracket may be modified to allow for full throttle operation.

5.9.10. Throttle plate screws shall be “as supplied” from Bocar, no grinding, filing or trimming on these screws, NO EXCEPTIONS.

5.9.11. NO OTHER TOOLING OR MODIFICATIONS ARE PERMITTED. REBUILDING IS NOT AN EXCUSE FOR MACHINING, MODIFYING OR CHANGING ANY DIMENSIONS OR ANY COMPONENT OF THE CARBURETOR, NO EXCEPTIONS.

5.9.12. Carburetor dimensions: Specifications listed herein are for checking purposes only. Re-working of the Bocar PCIT/3 to meet

or maximize these specifications is strictly prohibited.

Throttle plate thickness: .055” Minimum

Throttle shaft thickness: .210” Minimum

Venturi/Choke inside dimension: 26 mm Maximum

5.10. Intake Manifold

5.10.1. The intake manifold shall consist of standard VW Type 1 1600 (1584 cc) twin port components, or direct replacement, unless stated otherwise in the following rules.

5.10.2. The heat sink casting may be removed or modified.

5.10.3. Other EXTERNAL modifications to the cast sections are permitted for clearance purposes, provided no performance advance results.

5.10.4. The standard 1600 manifold end castings must be untouched internally other than for the purpose of port matching.

5.10.5. Port matching to a depth of 1.0” into the manifold casting from the manifold/head joining surface is permitted.

5.10.6. The official Formula First 32 mm restrictor plate must be installed per the following instructions listed. Absolutely no modifications are permitted to the restrictor plate. Any defects or marks on the blue anodize is not allowed and must be exchanged immediately for a new official Formula First 32 mm restrictor plate.

5.10.6.1 The official Formula First 32 mm restrictor plate must be installed/assembled exactly in the following order, using only the listed parts. No exceptions allowed.

1. Intake manifold
2. (1) Standard VW (or direct replacement) carburetor gasket
3. Official Formula First 32 mm restrictor plate
4. (1) Standard VW (or direct replacement) carburetor gasket
5. Bocar 34 PICT/3

5.10.6.2. Installation diagram supporting 5.10.6.1.

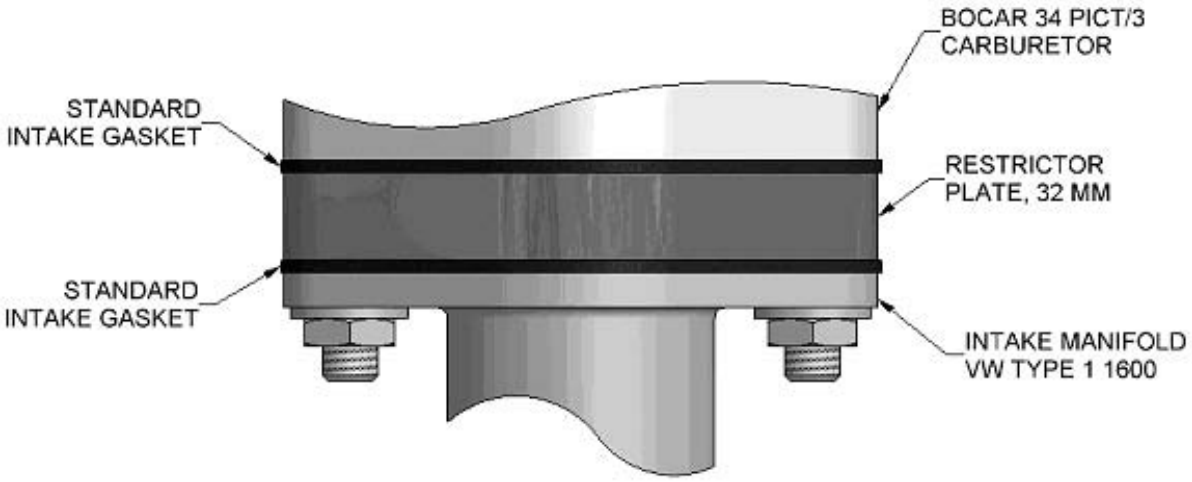

5.10.6.3. Any Formula First car may be subject to a “spot check” for restrictor plate compliance. A spot check may be visual or may require a vacuum leak check performed as follows:

1. Run engine at 2500 RPM
2. Seal the carburetor air inlet
3. Engine must stall within 4 seconds

5.10.7. All intake manifold vacuum fittings or ports must be plugged.

5.11. Engine cooling system.

5.11.1. The air-cooling system for cylinders and cylinder heads is free, subject to limitations on bodywork. See 5.7.7. with respect to oil coolers and lines.

5.12. Exhaust System

5.12.1. The exhaust system is free, but must comply with SCCA and local noise requirements and with overall body dimensions requirements.

5.13. Electrical System

5.13.1. 12-volt electrical systems shall be used.

5.13.2. The distributor must be a standard VW mechanical advance distributor, or Bosch 009, or a replacement replica, with the following modifications permitted.

5.13.3. The advance curve may be adjusted.

5.13.4. Standard Bosch or replica points may be replaced with an electronic replacement points set (Pertronix, Comp-U-Fire, etc.). The replacement set must be totally within the distributor.

5.13.5. Any coil is permitted.

5.13.6. Any 12v on-board automotive starter capable of starting the engine from the driver's compartment is permitted.

5.14. Other non-standard components.

5.14.1. Use of the following non-standard replacement parts is permitted provided that no unauthorized modification of any component results: Any fasteners (nuts, bolts, screws, etc); wiring; gaskets and seals; fuel line; spark plugs; piston rings; fan belt; and connecting rod bearings, camshaft bearings, and crankshaft main bearings, provided the bearings are of the same type and size and VW standard or oversize bearings.

6.Transaxle

6.1. The standard VW Type 1, 2 or 3 swing axle type transaxle must be used in standard configuration unless stated otherwise in these rules. All five gears (including reverse) must be operable, and controllable from the driver's seat. Synchromesh must be operating on all four forward gears. A direct replacement transmission case, VW part # 081-301-051, or replacement replica, "Rhino" case is permitted.

6.2. Shock damper mounts may be modified or removed.

6.3. Transmission shall not be installed in an inverted position.

6.4. The crown wheel must be transposed in the transmission case.

6.5. The differential cannot be modified in any way to limit its normal function. Torque biasing, limited slip, and locked differentials are prohibited.

6.6. The following gear ratios must be used with the 1600(1584) engine:

1 - 3.80; 2 – 2.06; 3 – 1.26; 4 – 0,89; differential 4.125

7. Frame and Body

7.1. Frame

7.1.1. The frame shall be constructed of steel tubing with a maximum cross section of 4". The driver's feet shall not extend forward the rear edge of the front axle beam tubes.

7.1.2. No frame/chassis rigidity or strength shall be derived from anything other than the steel frame tubes. No stressed skin, monocoque, or semi-monocoque construction is permitted.

7.1.3. The firewall panel must extend the full width of the cockpit and be at least equal to the top of the carburetor in vertical height from the floor pan may be rigidly attached to the frame tubes.

7.1.4. The undertray(s) or belly pan(s) shall be rigidly attached to the frame provided that the curvature of said undertray(s), measured vertically from the lowest point to its highest point at its attachment point to the frame rail member at its sides, shall not exceed 1" and have no downward turned edges. Undertray(s) or belly pan(s) shall not extend more than ¼" beyond the vertical line of the closest mating bodywork.

7.1.5. The area between the upper and lower main frame tubes, or at least 14" above the undertray(s) or belly pan(s) whichever is greater, from the front roll hoop bulkhead to the main roll hoop bulkhead shall be protected by one of the following methods to prevent the intrusion of objects into the side of the cockpit area. For either method, fasteners shall be no closer than an average of 6" centers (no stress bearing panels). The material used for chassis braces in this area shall be at least equivalent to roll hoop brace material.

7.1.5.1. Panel(s): Minimum of either .060" aluminum (6061 T-6 or equivalent) or 18 gauge steel attached outside of the main frame tubes.

7.1.5.2. Reinforced Body: Minimum 2-layers of 5 oz. bi-directional Kevlar material laminated to the inside of the bodywork and securely fastened to the frame.

7.1.6. A crushable structure or crush box must be rigidly attached to the H-beam and/or frame with a minimum cross section of 200

cm sq (31" sq), at least 40 cm (15.75") forward of the clutch and brake pedals (not depressed), constructed of a minimum of 18 gauge (.052" or 1.3 mm) 6061-T4 or equivalent aluminum must be used on all Formula First cars.

7.2. Body

7.2.1. The body shall be constructed of fiberglass, aluminum, steel, Kevlar, carbon fiber or any combination thereof.

7.2.2. The body must not be rigidly attached so as to form part of the structural integrity of the car.

7.2.3. Rear (Tail) Bodywork: The rear bodywork shall extend from the firewall to a point at least 16" aft of the rear axle centerline.

7.2.4. Front (Nose) Bodywork: Any bodywork forward of the front beam torsion spring tubes shall have a maximum width of 31.75" (80.65 cm)

7.2.5. Main (Center) Bodywork: No part of the frame or bodywork shall project beyond a plane connecting the vertical centerline of the front and rear tires. Fuel filler necks, caps or lids shall not protrude beyond the bodywork of the car. The bottom of any bodywork that extends below the frame members shall be on the same flat plane as the undertray and shall not deviate from that flat plane by more than 1".

7.2.6. Cockpit Opening: The driver's seat shall be capable of being entered without the removal or manipulation of any part or panel (except for a removable steering wheel and removable cockpit padding). The cockpit opening of the bodywork shall have the following minimal dimensions: Length: 60cm (23.622 inches) Width: 45cm (17.717 inches). This width extends over a length of 30cm (11.811 inches) minimum. This minimal rectangular opening may exist anywhere forward of the bracing, and required padding will not be considered in these dimensions.

7.2.7. Air Ducting: Air ducts may be installed for the purpose of delivering air to, or extracting air from the cylinders, cylinder heads, oil cooler and/or carburetor. Air duct opening(s) may be located within the cockpit area and/or penetrate the firewall provided the duct(s) design and construction would prohibit flame and debris from reaching the driver.

7.2.8. Aerodynamic Devices: Wings are prohibited. Any device specifically designed to use air speed to create aerodynamic downforce is prohibited.

Grand Touring

Item 1. Effective 11/1/08: Change the first sentence of section 9.1.2.F.4.e.10 as follows:

Any readily available manual transmission having no more than *six (6) forward speeds in GT2 and* five (5) forward speeds *in GT3 and Lite* and an functional reverse speed may be used, provided that it is fitted in the same basic location used in the standard production automobile.

RECOMMENDATIONS TO THE BoD

None

MEMBER ADVISORIES

FF – The Formula advisory committee is reviewing the FF bodywork and aero issues. The CRB advises entrants not to make liberal interpretations of the existing rules, pending clarification of the current wording.

American Sedan – The CRB and AS advisory committee are finalizing the classifications for late model Touring 2 cars in American Sedan. In general the classifications will allow for AS rules except for the drive train, which will follow T2 rules. The complete details will be published in an upcoming FasTrack. The classification list will include at a minimum the following cars:

Camaro / Firebird (96-02) @ 3680 lbs

Ford Mustang Cobra (96-02) @ 3480 lbs

Pontiac GTO (04-06) @ 3680 lbs

Touring – The CRB welcomes comments regarding the use of restrictors to limit engine power to permit suspension enhancements (springs and sway bars) on Touring cars without changing the current performance level. This would change high horsepower, poorly handling cars into lower horsepower, better handling car. This would match how cars achieve their lap times.

NEW CAR CLASSIFICATIONS

GTL – Triumph Spitfire bodywork

GTL – Honda Civic Del Sol

GTL – Toyota Celica bodywork

ITR – Chevrolet Camaro add the 1996 and 00-02 model years

ITR – Pontiac Firebird add the 1996 and 00-02 model years

ITA – Mazda Protégé (01-03)

ITC – Mazda Protégé (90-94)

EP – BMW Z3 2.8L

EP – Honda S2000

FP – Fiat X/1-9 & Bertone 1300

SSB – Honda Civic Si add the 2008 model year

T1 – Shelby Mustang GT500 (effective 11/1/08)

REFERRED or TABLED

Formula/Sports Racer

FE – Change name of FSCCA to Formula Enterprises (Skirmants). Tabled for further discussion.

Grand Touring

1. GT – Allow hood bulge where needed and remove spec line allowances (Patten). Tabled for further research.
2. GT1 – Clarify LS1 engine allowance (Sloma). Tabled for further review.
3. GT1 – Classify the Ford Fusion bodywork (Yozamp). Tabled for further review.
4. GT2 – Adjust the weight of the VQ30 to 2,180 lbs (Mason). Tabled for further discussion.
5. GT3/L – Allow wings and splitters (various 4 letters). Tabled for further discussion.
6. GTL – Classify the Lotus Elise (Brown). Tabled for further research.

Improved Touring

1. IT – Allow alternate fuel injectors (Ellis-Brown). Tabled for further review.
2. ITR – Classify V8 Camaros and Mustangs (various 4 letters). Tabled for further review.
3. ITS – Change the 1989 Porsche 944 compression to 10.9:1 (VanSteenburg). Tabled for further research.

Production

1. P – Classify the 2001-2 Neon (Hazlett). Tabled for further specs
2. HP – Reduce the BMW 1600 weight (Simpson). Tabled for further research.

Touring/Showroom Stock

1. T2 – Allow Mitsubishi Lancer Evo a larger tire and alternate suspension (Moses). Tabled in January for identification of parts and specifications.
2. T3 – Separate the S2000 spec line and add the CR model to the 2004-7 listing (Niffennegger). Tabled for further research and discussion.
3. T/SS – Classify the diesel VW (Mathes). Tabled for the VTS sheet.
4. SSB – Allow the Celica GTS a limited slip (Fondakowski). Tabled for further research.

Spec Miata

Allow 1993 LE/R tie rod ends (Disque). Tabled for further research.

NOT RECOMMENDED

GCR

1. Require a race schedule order (Zekert). We do not want to mandate schedules or remove flexibility.
2. Add a .05 tolerance to chokes/restrictors/throttle bores (LeCain). The measurement exceeds the maximum tolerance.

Formula

1. FB – Do not include endplates in the front wing length (4 letters). The recent clarification is correct as written.
2. FC – Restrict the number of Zetec engine builders (Nicholas). FC is not a spec class.
3. F500 – Allow 3 in. rubber pucks (Murphy). There is insufficient support for the change.
4. DSR – Increase the chain drive weight to 1,000 (Montalvo). The current weight specification is adequate.

Grand Touring

1. GT1 – Allow carbon brake rotors (Jung). The rules are adequate as written.
2. GT1 – Allow weight reduction for using smaller tires/wheels (Jung). The rules are appropriate for the class.
3. GT1 – All the RX-7 a splitter (Jung). We wish to keep the body requirements consistent across the models.
4. GT2 – Eliminate IRS weight penalty (Tambourine). The rules are adequate as written.
5. GT2 – Eliminate the sequential transmission weight penalty (Tambourine). The rules are adequate as written.
6. GT2/3 – Combine GT 2 and GT3 with BP and DP (Lustig). We previously considered this consolidation.
7. GT3 – Classify the E36 BMW w/1798 cc in GT2 (DesJardin). The engine size is inappropriate for the class.
8. GT3 – Classify the VW 1855 engine in GT3 (Ricker). The engine is well below the parameters of the other vehicles in the class.
9. GTL – Classify the Nissan 350Z (Burke). We do not wish to classify cars associated with larger displacement engines in a class such as GTL with smaller displacement engines.
10. GTL – Allow the L16 engine with the L18 stroke (Gough). The L18 is classified in GTL.
11. GTL – Allow larger SIRs for tub cars (Church). We do not differential between tube frame and tub based cars.
12. GTL – Increase the SIR for the 1488 cc A15 to 26 mm (Birk). We have made changes to the class and wish to monitor the results.
13. GTL – Classify all Z and ZX series Nissans (Welling). We do not wish to classify cars associated with larger displacement engines in a class such as GTL with smaller displacement engines.
14. GTL – Classify the RX-8 body (Hahn). We do not wish to classify cars associated with larger displacement engines in a class such as GTL with smaller displacement engines.
15. GTL – Rescind the weight changes and make SIR adjustments (Birk). We wish to monitor the results of the changes.

Improved Touring

1. IT – Allow alternate material body panels (Ira). Alternate panels are inconsistent with the class philosophy.
2. IT – Help carbureted cars (Jordan/Harlan). Carbureted cars are already allowed multiple changes from stock.
3. IT – Allow remote reservoir shocks with only two adjustments (Baader). This is inconsistent with the class philosophy of keeping costs low.
4. IT – Allow alternate materials for door panels (Brasch). The rule is adequate as written.
5. ITA – Classify the 1988-91 Honda CRX HD 1.5 L in ITA (Beyer). The car is classified in ITB.
6. ITA – Reduce the weight of the 1.6 Miata (Whitton). The specs are appropriate as listed.
7. ITA – Reduce the weight of the DOHC Neon Coupe by 200 lbs (Thompson). The weight is appropriate as listed.
8. ITA – Review the classification of the 1996 BMW Z3 1.9 L (Breault). The car is classified appropriately.
9. ITB – Correct the compression ratio of the Golf to 9.6:1 (Moore). The specs are correct based on the factory manual.
10. ITB – Review the Golf III (Gran). The specs are appropriate for the class.
11. ITC – Change or remove the 6 in. wheel limitation (Luke/McKinley). The rule is adequate as written.
12. ITR – Reduce the weight of the S2000 (Swan). The weight is appropriate as listed.
13. ITS – Add the 318i to the 325i spec line and allow updating/backdating (Staub). We have proposed a change that would no longer require the VIN.

Production

1. P – Allow alternate side impact design (Larsen). The rules are adequate as written.

2. P – Allow additional updating and backdating beyond individual spec lines (Root). The rules are adequate as written.

3. P – Clarify that 2-piece main caps are legal (Bartell). The rule is adequate as written.

4. P – Clarify air cooler ducting requirements (Fallandy). The rule (section 9.1.5.E.9.a.10.B) is adequate as written.

5. EP – Increase the valve lift for the 1987-91 BMW 325 to .450 in. (Smith). We have made change to the car and wish to monitor the results.

6. EP – Increase the Lotus Europa weight to a realistic number (Savage). The specs are appropriate as listed.

7. HP – Allow side drafts on the BMW 1600 (Simpson). We have made changes and wish to monitor the results.

8. HP – Increase the compression ratio of the BMW 1600 (Simpson). We have made changes and wish to monitor the results.

9. HP – Allow GT6 brakes on the Spitfire (Feller). We wish to monitor the car at its new weight classification.

Touring/Showroom Stock

1. T1 – Review the 2008 C6 weight (Ingle). The weight is appropriate as listed.

2. T3 – Reduce the weight of the S2000 (Costello). We have made changes and wish to monitor the results.

3. SSB – Reclassify the Mazda 6 (Franco-Trujillo). The car fits the performance parameters of the class.

4. SSB – Allow 18 x 7 wheels on the Mazda 6 (Franco-Trujillo). The specs are appropriate as listed.

5. SSB – Allow automatic transmissions for the Mazda 6 (Franco-Trujillo). Automatic transmissions are reviewed on an individual basis as needed per section 9.1.7.E.24.

6. SSC – Combine the Nissan Sentra SER Spec V spec lines (Lipperini). The classification is appropriate as listed.

7. SSC – Reduce the weight of the reclassed Subaru Impreza (Lipperini). The car fits the performance parameters of the class.

8. SSC – Reduce the weight of the 2002-3 Civic (Lipperini). The car fits the performance parameters of the class.

Previously Addressed

Addressed in the 2008 GCR:

Define “valance” (Sirota/Badder).

Addressed in Technical Bulletin 08-03 or the March 2008 FasTrack:

GT1 – Reconsider changes to ACP bodywork (5 letters).

Addressed in Technical Bulletin 08-02 or the February 2008 FasTrack:

1. HP – Various competition adjustment requests for the 510 (Brydebell).

2. T3 – Allow the Scion tC the supercharger kit (McCaughey).

3. SSB – Reclassify the 2001-05 Miata to SSC (Zink/Etherington).

Addressed in Technical Bulletin 08-01 or the January 2008 FasTrack:

1. GTL – Create a weight to SIR size compensation (Gough).

2. GTL – Classify the Mazda RX-3 body (Mills).

3. GTL – Classify the 1979-85, 1986-91, and 1993-95 Mazda RX-7 bodies (Hahn).

4. GTL – Classify the RX-2 and RX-3 bodies (Hahn).

Addressed in Technical Bulletin 07-12 or the December 2007 FasTrack:

GTL – Classify the Sprite/Midget (Dewitt).

No Action Required

GCR

1. Allow alternate fuels (Lipperini). Thank you for your input. The national staff is researching fuels.

2. Allow Halotron 1 extinguishers (Drommer). Thank you for your input. We are looking at these extinguishers for future approval.
3. Class input (Tolman). Thank you for your input.
4. Driver suit input (3 letters). Thank you for your input.
5. Support for including FB at the 2008 Runoffs (4 letters). Thank you for your input.
6. Club racing input (Holbrook). Thank you for your input.
7. Regional/national input, Runoffs input (Butler). Thank you for your input.
8. Support for reducing the number of classes (Orean). Thank you for your input.

Formula/Sports Racer

1. FE – Make provisions for a transponder (Kelly). Thank you for your input. Transponders operate through fiberglass.
2. F500 – Do not change the suspension rules (Eckles). Thank you for your input.
3. FS – Opposition to Formula First (Johnson). Thank you for your input.
4. FV – Support for removal of the front droop limiter horn (12 letters). Thank you for your input.
5. FV – Opposition to removal of the front droop limiter (19 letters). Thank you for your input.
6. Clarify the rocker arm requirements (Livermore). Appendix C. specifies the tolerance for such parts.
7. FV – Give the emulsion tube the same considerations as a jet (various 3 letters). Thanks for your input.

Grand Touring

1. GT1 – Support for wing height changes (Sloma). Thank you for your input.
2. GT1 – Support for common diffuser requirements (Sloma). Thank you for your input.
3. GT2 – Support for wings in GT2 (Sanda). Thank you for your input.
4. GTL –.Opposition to the 12A in GTL (Alexander). Thank you for your input.
5. GTL – Opposition to GT2/GT3 bodies in GTL (Winter/Alexander). Thank you for your input.
6. GTL – RX-7 classification input (Lentz). Thank you for your input.
7. GTL – X1/9 input (Roberts). Thank you for your input.
8. GTL – GTL concerns (Hargrove). Thank you for your input.
9. GTL – GLT rules adjustments input (4 letters). Thank you for your input.
10. GTL – Opposition to the 350Z in GTL (Patten). Thank you for your input.
11. GTL – Rescind the weight changes to 4-valve cars (Bovis). Thank you for your input.

Improved Touring

1. IT – Support for eliminating VIN rule (5 letters). Thank you for your input.
2. ITR – Do not allow V8s in ITR (Roth). Thank you for your input.
3. ITR – Support for allowing V8s in ITR (Childs). Thank you for your input.

Production

1. EP – Opposition to reclassification of Lotus Europa (Savage). Thank you for your input.
2. EP – Upset with timing of Volvo reclassifications (Chaney/Broring). Thank you for your input.

Touring/Showroom Stock

1. T1 – The CRB would like to correct a misprint that was published in the February FasTrack. A request from Mr. Ingle was submitted to raise the weight of the C6 Corvette and not the C5 Corvette. We sincerely apologize for any harm this mistake may have caused.
2. T2 – Restrict the Solstice more (Hermes). Thank you for your input.
3. T2 – Reduce the Solsitce GXP tire size (Peter). Thank you for your input.
4. T/SS – Opposition to T/SS classes limited to current cars (4 letters). Thank you for your input.
5. T/SS – Support for T/SS classes limited to current cars (Lipperini). Thank you for your input.

Spec Miata

1. Allow open tires (Buck). Thank you for your input.
2. Opposition to new track rule (Buck). Thank you for your input.
3. Shock spacer dimensions input (Zimmerman). Thank you for your input.

Resumes

IT – Matt Miskoe – Thank you for your resume. We will keep it on file.

CLUB RACING IMMEDIATE RULE REVISION

To: Competitors, Stewards, and Tech Inspectors
From: Jeremy Thoennes
Re: Immediate Rule Revision
Date: January 22, 2008

The Club Racing Board approved the following revision by email on January 22, 2008. The Board has invoked GCR section 1.2.2.A to make this revision effective immediately.

Grand Touring
GT1
Section 9.1.2.E.1.c, p. 265, Corvette C6 (bodywork only) (05-), change the last sentence to read as follows: Effective 4/1/08 the front undertray and diffuser included in the ACP kit shall be replaced with an undertray compliant with the GT1 rules. The ACP front diffuser may be used until this date with a 50 lb. weight penalty. Effective 6/1/08 the rear fascia and diffuser included in the ACP kit must be replaced with bodywork compliant with the GT1 rules. The ACP rear fascia and diffuser may be used until this date with a 50 lb. weight penalty. Front and rear diffuser included in ACP kit shall not be utilized – undertray must comply with GT1 rules.

CLUB RACING TECHNICAL BULLETIN

DATE: February 6-10, 2008
NUMBER: TB 08-03
FROM: Club Racing Board
TO: Competitors, Stewards, and Scrutineers
SUBJECT: Errors, and Omissions, Competition Adjustments, Clarifications, and Classifications.

All changes are effective 3/1/08 unless otherwise noted.

GCR

1. Section 8.4.3, p. 70, change the third sentence to read as follows: The Notice of Appeal shall be U.S. Government postmarked or registered with a carrier service (*e.g.* UPS, Federal Express) *or by Express Mail, fax or email* within ten (10) days after the announcement of the decision being appealed has been given to the appellant. Include the appropriate appeal fee of $175, payable to SCCA, Inc. *If you fax or email your appeal, include a Visa or MasterCard account number to which your appeal will be billed.*
2. As approved by the BoD in this FasTrack; effective upon publication, correct the first Note of section 9.1.12, p. 75, to read as follows: **Note 1:** For the purposes of this section, "entrants" shall be defined as drivers classified in the final official race results of National races as finishers, did-not-finish (DNF), *did-not-start (DNS),* or disqualified (DQ). ~~Drivers classified as did-not-start (DNS) shall not count as entrants.~~
3. Section 9.3.19.B, p. 81, add to the end of the first sentence as follows: *...or British Standards Institute BS6658-85 type A/FR.*
4. *Clarify section 9.3.40, p. 90, by changing the second sentence to read as follows: ~~In cases where the seat is upright t~~ The back of the seat shall be firmly attached to the main roll hoop, or its cross bracing, so as to provide aft lateral support.*
5. *Section 9.4.E.3.a, p. 97, add to the end of first sentence as follows: Mounting plates welded to the structure of the car shall not be less than .080 inches thick nor more than 0.25 inches thick.*
6. *Section 9.4.E.3.b, p. 98, add the following after the first sentence: Mounting plates shall not be more than 0.25 inches thick.*
7. As approved by the BoD in this FasTrack; effective upon publication, add the following before the last sentence of the first paragraph in section 9.4.5, p. 100: Closed cockpit sports racer cages may be constructed in accordance with 9.4. ROLL CAGES FOR GT AND PRODUCTION BASED CARS.
8. Section 9.4.5.G.1.C, p. 104, change the parenthetical "honeycomb" to "e.g. honeycomb".
9. Appendix B – Glossary, clarify the definition of Ferrous, p. 117, to read as follows: Ferrous – An alloy containing *more than 50%* iron.
10. *Appendix B – Glossary, clarify the definition of Girdle, p. 119, A ~~An engine~~ component whose purpose is the structural reinforcement of the bottom end of an engine block. ~~by the replacement of~~ It either replaces the main bearing caps with a continuous*

block of material containing equivalent bearing mounts or it is a continuous block of material that mates with the existing main bearing caps (which may be machined to achieve the mating).

11. Appendix B – Glossary, p. 133, add a new definition as follows: *Turbo inlet restrictor – A system to limit engine performance that meets the following criteria: The inlet restrictor shall be placed within 50mm of the rotating section (impeller assembly) of the pressurizing unit. The inlet restrictor shall have a single, circular opening through which all inlet air passes. The maximum ID of the restrictor is listed on the vehicle's spec line. The restrictor's maximum ID must be maintained for a minimum length of 3mm. There shall be no other provisions for airflow to the turbocharger other than through this single orifice.*

Note – For more info please visit: www.isiaz.com/turbochargerrestrictors

Formula

FV

1. As approved by the BoD in this FasTrack; effective upon publication, change section 9.1.1.C.3.a.8, p. 203, to read as follows: The rubber portion ~~only~~ of the bump stop and *any portion or all of the bump stop horn* may be ~~altered or~~ removed *up to its base at the beam upright.*
2. Clarify section 9.1.1.C.5.D.19, p. 208, by adding to the first sentence as follows: Fitting of any standard Solex 28 PCI or 28 PICT carburetor and any jets *and emulsion tube* may be used.
3. Clarify section 9.1.1.C.5.D.19.f, p. 208, by adding to the first sentence as follows: Carburetor body: The removal of *mold* flashing from ~~internal~~ *cast* surfaces*, including the emulsion tube carrier (holder),* is permitted, but no additional material is to be removed ~~from the casting in the area of the bore, emulsion tube carrier, or any carrier supports~~. *The emulsion tube carrier (holder) must not be otherwise modified.*

Grand Touring

GT1

1. As approved by the BoD in this FasTrack; effective upon publication, add a new section 2. to section 9.1.2.D.3.d, p. 252, to read as follows:
2. *Mid-engine vehicles may use an electric water pump.*
2. As approved by the BoD in this FasTrack; effective upon publication, change section 9.1.2.D.8.k.2.F, p. 259, to read as follows: Wing mounting specs: The entire wing assembly must be mounted ~~at least 2.00 inches~~ below the peak of the roof (measured at *the highest point of the roof* ~~vehicle centerline~~). Trailing edge of wing assembly must be located within an area defined by a point; 6" forward of rearmost bodywork and the rearmost bodywork (measured at vehicle centerline). Two wing mounting posts must be used, with each one located between 16"-20" inboard from end of wing. *The exposed portions of the wing mounting posts shall not exceed 85 square inches each.* Max. wing angle from horizontal is 30-degrees.

GT2

1. As approved by the BoD in this FasTrack; effective upon publication, change section 9.1.2.F.4.b.13, p. 271-272, as follows (portions omitted remain unchanged): A spoiler *or a Club Racing specified rear wing for GT2* may be fitted to the rear of the car. Note: O.E.M. rear spoilers and wings are note permitted unless specifically listed on the vehicle's specification form.

   If a spoiler is used, it shall be contiguous with the bodywork and shall comply with the following:

   (Existing sections 9.1.2.F.4.b.13.a-d)

   If a Club Racing specified wing is used (GT2 only), it shall comply with the following:

   E. Specifications: Unmodified single element Liebeck airfoil #1LD104E scaled to a chord length of 10.75 inches. The maximum cross-sectional tolerance of the wing profile is 0.060 inch. A maximum 0.50 inch Gurney tab is allowed at the trailing edge of the wing element. The tab must be mounted 90 degrees to the upper wing surface. No air may pass between the tab and the wing. The wing end plates must fit within a rectangle measuring 11.00 inches long by 4.00 inches tall. No portion of the wing element or tab may extend beyond the perimeter of the endplate. The endplates must be mounted parallel to the vehicle centerline, and must be perpendicular to the ground. Endplates must be flat, with no curvature or Gurney tabs. The maximum width of the entire wing assembly (wing element, endplates, Gurney tab, and mounting hardware) is 68.00 inches, but no wider than the rear body width including fender flares.

   F. Wing mounting: The entire wing assembly must be mounted below the highest point of the roof or roll cage main hoop whichever is higher measured at the highest point. The trailing edge of the wing assembly must be located within an area defined by a point; 6" forward of rearmost bodywork and the rearmost bodywork measured at vehicle centerline. Two wing mounting posts must be used, with each one located between 8"-20" inboard from end of wing. The exposed portion of the wing mounting posts shall not exceed 85 square inches each. The maximum wing angle from horizontal is 30-degrees.
2. As approved by the BoD in this FasTrack; effective upon publication, change section 9.1.2.F.4.b.12, p. 271 to read as follows: A spoiler may be fitted to the font of the car. It shall not protrude beyond the overall outline of the car as viewed from above except in GT2 where a front splitter may extend up to *three* (*3*) inches. In all classes, the spoiler shall not extend aft of the forward most part of the front fender opening (cutout), and shall not be mounted…
3. Cars – PORSCHE, p. 291, correct the 996 GT3 Cup specs by adding to the Notes as follows:The stock unmodified fuel tank is allowed.

GT3

1. Engines – NISSAN, p. 305, change the specs for the L20 w/ Z22 block to read as follows: Weight(lbs): 1830.
2. Engines – PORSCHE, p. 307, add to the specs for the 2992cc engine as follows: Notes: OEM 2-valve air cooled heads may be modified to utilize two (2) spark plugs per cyl.
3. Classify the Toyota 7AFE engine in GT3.

Add new spec line to GTCS, p. 309, Engines – TOYOTA, Engine Family: 7AFE, Engine Type: DOHC, Bore x Stroke(mm): 81.0 x 85.4,

Displ.(cc): 1762, Head Type: Alum, Crossflow, Valves/Cyl.: 4, Fuel Induction: 33mm SIR, Weight(lbs): 1950, Notes: Alternate heads 11101-16010 and 11101-16030.

4. Classify the Toyota 1ZZ engine in GT3.

Add new spec line to GTCS, p. 309, Engines – TOYOTA, Engine Family: 1ZZ, Engine Type: DOHC, Bore x Stroke(mm): 79.0 x 91.5, Displ.(cc): 1794, Head Type: Alum, Crossflow, Valves/Cyl.: 4, Fuel Induction: 33mm SIR, Weight(lbs): 1950.

GTL

1. Engines – ALFA, p. 313, add to the specs for the 1779cc engine as follows: Notes: Alt. Head: 19510-01053-04 (twin plug).
2. Classify the Triumph Spitfire bodywork in GTL.
   Add new spec line to GTCS, p. 314, Cars – BLMI, Model: Triumph Spitfire, Body Style: 2dr, Driveline: RWD, Wheelbase(in): 83.0.
3. Classify the Triumph 1296cc engine in GTL.
   Add new spec line to GTCS, p. 314, Engines – BLMI, Engine Type: OHV, Bore x Stroke(in): 2.90 x 2.992, Displ.(cc): 1296, Head Type: Iron, Non-Crossflow, Valves/Cyl.: 2, Fuel Induction: Unrestricted, Weight(lbs): 1730, Notes: RWD add 50 lbs.
4. Classify the Triumph 1493cc engine in GTL.
   Add new spec line to GTCS, p. 314, Engines – BLMI, Engine Type: OHV, Bore x Stroke(in): 2.90 x 3.44, Displ.(cc): 1493, Head Type: Iron, Non-Crossflow, Valves/Cyl.: 2, Fuel Induction: 25mm SIR, Weight(lbs): 1780, Notes: RWD add 50 lbs.
5. Engines – FORD, p. 317, change the specs for the Zetec series engine to read as follows: Weight(lbs): 2050.
6. Classify the Honda Civic Del Sol bodywork in GTL.
   Add new spec line to GTCS, p. 317, Cars – HONDA, Model: Civic Del Sol, Years: 93-97, Body Style: 2dr, Driveline: FWD, Wheelbase(in): 93.3.
7. Cars – HONDA, p. 317, CRX (84-87), add to the Notes as follows: Hood bulge permitted, no openings.
8. Cars – HONDA, p. 317, Civic (84-87) 2dr, 3dr, add to the Notes as follows: Hood bulge permitted, no openings.
9. Cars – HONDA, p. 317, Civic (84-87) 4dr, add to the Notes as follows: Hood bulge permitted, no openings.
10. Engines – HONDA, p. 318, change the specs for the B18 series engine to read as follows: Weight(lbs): 2050.
11. Engines – MAZDA, p. 320, change the specs for the 1839cc engine to read as follows: Weight(lbs): 2050.
12. Classify the Nissan GA16 series engine in GTL.
    Add new spec line to GTCS, p. 321, Engine Family: GA16DE, Engine Type: DOHC, Bore x Stroke(mm): 76.0 x 88.0, Displ.(cc): 1597, Head Type: Alum, Crossflow, Valves/Cyl.: 4, Fuel Induction: 24mm SIR, Weight(lbs): 2000.
13. Classify the Toyota Celica bodywork in GTL.
    Add new spec line to GTCS, p. 325, Cars – TOYOTA, Model: Celica, Years: 00-05, Body Style: 2dr, Driveline: FWD, Wheelbase(in): 102.4 / 93.7.
14. Classify the Toyota 7AFE engine in GTL.
    Add new spec line to GTCS, p. 326, Engines – TOYOTA, Engine Family: 7AFE, Engine Type: DOHC, Bore x Stroke(mm): 81.0 x 85.4, Displ.(cc): 1762, Head Type: Alum, Crossflow, Valves/Cyl.: 4, Fuel Induction: 24mm SIR, Weight(lbs): 2050.
15. Classify the Toyota 1ZZ engine in GTL.
    Add new spec line to GTCS, p. 326, Engines – TOYOTA, Engine Family: 1ZZ, Engine Type: DOHC, Bore x Stroke(mm): 79.0 x 91.5, Displ.(cc): 1794, Head Type: Alum, Crossflow, Valves/Cyl.: 4, Fuel Induction: 24mm SIR, Weight(lbs): 2050.
16. Engines – VOLKSWAGEN, p. 327, change the specs for the 1471cc engine to read as follows: Weight(lbs): 1850.
17. Classify the Volkswagen 1457cc engine in GTL.
    Add new spec line to GTCS, p. 327, Engine Family: water cooled, Engine Type: SOHC, Bore x Stroke(mm): 79.5 x 73.4, Displ.(cc): 1457, Head Type: Alum, Non-Crossflow, Valves/Cyl.: 2, Fuel Induction: 25mm SIR, Weight(lbs): 1850.
18. Engines – VOLKSWAGEN, p. 327, change the specs for the 1780cc (16 valve) engine to read as follows: Weight(lbs): 2050.

Improved Touring

1. Clarify section 9.1.3.B, p. 329, by changing the last sentence to read as follows: Other than those specifically allowed by these rules, no component or part normally found on a stock example of a given vehicle may be disabled, altered, or removed ~~for the purpose of obtaining any competitive advantage~~.
2. Correct section 9.1.3.D.1.s, p. 334, by deleting in its entirety: ~~The engine management computer or ECU may be altered provided that all modifications are done within the original housing.~~
3. Section 9.1.3.D.5.b.2, p. 335, clarify by adding the following to the end of the section: *External adjustments of shock control shall be limited to two (2).*
4. Section 9.1.3.D.5.c.1, clarify the section by changing the first sentence to read as follows: Any anti-roll bar(s), traction bar(s), panhard rod or watts linkage may be added, *removed* or substituted, provided its/their installation serves no other purpose.
5. Section 9.1.3.D.9.f, p. 340, clarify by changing to read as follows: Carpets, center consoles, floor mats, headliners, sun roof liner and frame, dome lights, grab handles, and their insulating, attaching or operating mechanisms may be removed. *Sound deadening (melt sheets) and undercoating may be removed.* Door interior trim panels may be replaced with 0.060" – *0.065"* aluminum securely attached to the door. All other interior trim panels, except the dashboard, may be removed. Other than to provide for the installation of required safety equipment or other authorized modifications, no other driver/passenger compartment alterations or gutting are permitted.

ITR

1. Chevrolet Camaro (97-99), p. 343, correct the listing to include the 96-02 model years.
2. Pontiac Firebird (97-99), p. 344, correct the listing to include the 96-02 model years.

ITA

1. Classify the Mazda Protégé ES/LX (01-03) in ITA.
   Add new spec line to ITCS, p. 355, Mazda Protégé ES/LX (01-03) Engine Type: 4 Cyl DOHC, Bore x Stroke(mm) / Displ.(cc): 83.0 x 92.0 / 1991, Valves IN & EX(mm): (I)31.5 (E)27.6, Comp. Ratio: 9.1, Wheelbase(in): 102.8, Wheel Dia.(in): 15/16, Gear Ratios: 3.31, 1.84, 1.31, 0.97, 0.76, Brakes Std.(mm): (F)259 Vented Disc (R) 259 Vented Disc, Weight(lbs): 2305.

ITB

1. Ford Pinto 2.3 (74-80), p. 361, change the specs to read as follows: Weight(lbs): 2340.
2. Pontiac Fiero 2.5 (84-87), p. 365, change the specs to read as follows: Weight(lbs): 2315.
3. Pontiac Fiero 2.5 (1988), p. 365, change the specs to read as follows: Weight(lbs): 2315.

ITC

1. Classify the Mazda Protégé SE/DX in ITC.
   Add new spec line to ITCS, p. 370, Mazda Protégé SE/DX (90-94), Engine Type: 4 Cyl SOHC, Bore x Stroke(mm) / Displ.(cc): 83.0 x 85.0 / 1839, Valves IN & EX(mm): (I)30.0 (E)25.0, Comp. Ratio: 8.9, Wheelbase(in): 98.4, Wheel Dia(in): 13, Gear Ratios: 3.31, 1.83, 1.23, 0.91, 0.71, Brakes Std.(mm): (F)235 Vented Disc (R)200 Drum, Weight(lbs): 2375.

Prepared

1. Change the second bullet point of section 9.1.4.B, p. 375, to read as follows: ~~Currently classified~~ *1990 and newer* World Challenge cars, using the vehicle's most recent VTS sheet. (GT cars in B Prepared and Touring cars in D.) Note: Competitors are responsible for providing the up-to-date VTS. *Only those current and ex-World Challenge cars that can produce a Pro Racing VTS sheet are eligible under these preparation rules.*

Production

EP

1. As approved by the BoD in this FasTrack, reclassify the Acura Integra (90-93) to FP at 2235 lbs. Note – the FP classification and specs were published in TB 08-01.
2. Alfa Romeo all Spider models (-94), p. 416-417, change the specs to read as follows: Weight(lbs): 1950.
3. BMW 2002/2002tii, p. 416-417, change the specs to read as follows: Weight(lbs): 2000.
4. BMW 318i & 320i, p. 416-417, change the specs to read as follows: Weight(lbs): 2000.
5. BMW Z3 1.9L, p. 418-419, change the specs to read as follows: Weight(lbs): 2000 *2050 **2100.
6. BMW 325i/is (E30) (84-91) (excl. conv.), p. 418-419, change the specs to read as follows: Weight(lbs): 2200 *2255 **2310.
7. BMW 318is (1991), p. 418-419, change the specs to read as follows: Weight(lbs): 2050 *2101 **2153.
8. BMW 318is E36 (92-95), p. 418-419, change the specs to read as follows: Weight(lbs): 2100 *2153 **2205.
9. Classify the BMW Z3 as a Level 2 car in EP.
   Add new spec line to PCS-B, p. 418-419, BMW Z3 2.5L (97-00), Prep. Level: 2, Weight(lbs): 2650 *2716 **2783, Engine Type: 6 Cyl DOHC, Bore x Stroke(mm): 84.0 x 84.0, Displ.(cc): 2793, Block Mat'l: Iron, Head Mat'l: Alum, Valves IN & EX(mm): (I)33.0 (E)30.5, Carb. No. & Type: Fuel Injection, Wheelbase(in): 96.3, Track(F&R)(in): 59.8 / 60.5, Wheels(max): 16 x 7, Brakes Std.(mm): (F)300 Vented Disc (R)294 Vented Disc, Notes: Comp. Ratio limited to 12.0:1, Valve Lift limited to .500".
10. Chevrolet Cavalier 2.0 (82-87), p. 418-419, change the specs to read as follows: Weight(lbs): 2050.
11. Chevrolet Corvair Coupe (65-69), p. 418-419, change the specs to read as follows: Weight(lbs): 2200.
12. Dodge Omni GHL 2.2, p. 418-419, change the specs to read as follows: Weight(lbs): 2050.
13. Dodge Shelby Charger / Omni 024 (83-84), p. 418-419, change the specs to read as follows: Weight(lbs): 2000.
14. As approved by the BoD in this FasTrack; reclassify the Elva Courier Mk I, II, & III 1622 & 1798 to FP with the 1800cc engine at 1900 lbs and 1.5" carbs and the 1600cc at 1800 lbs.
15. As approved by the BoD in this FasTrack; reclassify the Elva Courier Mk III, IV 1800 & Mk IV R&C to FP at 1900 lbs and 1.5" carbs.
16. Fiat 124 Sport Spider 1600 & 124 Spider 2000, p. 420-421, change the specs to read as follows: Weight(lbs): 2050.
17. Ford Mustang 2.3 (79-93), p. 420-421, change the specs to read as follows: Weight(lbs): 2100 *2153 *2205.
18. As approved by the BoD in this FasTrack; reclassify the Honda Civic Si (88-91) to FP at 2075 lbs.
19. As approved by the BoD in this FasTrack; reclassify the Honda CRX Si (88-91) to FP at 2075 lbs.
20. Honda Prelude Si (p. 420-421, change the specs to read as follows: Weight(lbs): 2420 *2481 **2541.
21. Classify the Honda S2000 as a Level 2 car in EP.
    Add new spec line to PCS-B, p. 420-421, Honda S2000 (00-03), Prep. Level: 2, Weight(lbs): 2520 *2583 **2646, Engine Type: 4 Cyl DOHC, Bore x Stroke(mm): 87.0 x 84.0, Displ.(cc): 1997, Block Mat'l: Alum, Head Mat'l: Alum, Valves IN & EX(mm): (I)36.0 (E)31.0, Carb. No. & Type: Fuel Injection, Wheelbase(in): 94.5, Track(F&R)(in): 62.1 / 63.7, Wheels(max): 16 x 7, Brakes Std.(mm): (F)300 Vented Disc (R)282 Solid Disc, Notes: Comp. Ratio limited to 12.0:1, Valve lift limited to .500".
22. Hyundai Tiburon FX 2.0L (97-98), p. 422-423, change the specs to read as follows: Weight(lbs): 2000 *2050 **2100.
23. Lotus / Caterham 7 America, p. 422-423, correct the specs to read as follows: Prep. Level: 2.
24. As approved by the BoD in this FasTrack; reclassify the Lotus Mk 46, 54, 65 Europa to FP at 1630 lbs.
25. As approved by the BoD in this FasTrack; reclassify the Lotus Super Seven Series Four to FP at 1810 lbs.
26. Mazda RX-2, p. 422-423, change the specs to read as follows: Weight(lbs): 1950 *1999 *2048.
27. Mazda MX-5 / Miata 1.6L (-93), p. 422-423, change the specs to read as follows: Weight(lbs): 2175.
28. Mazda MX-5 / Miata 1.8L (90-97), p. 422-423, change the specs to read as follows: Weight(lbs): Carb: 2175 F.I.: 2225.
29. Mazda MX-5 / Miata (99-02), p. 424-425, change the specs to read as follows: Weight(lbs): 2075 *2127 **2179.
30. Mazda RX-3 & 3SP (72-78), p. 424-425, change the specs to read as follows: Weight(lbs): 1950 *1999 **2048.
31. Mazda RX-7 (12A/13B) (79-85), p. 424-425, change the specs to read as follows: Weight(lbs): 12A: 2100 *2153 **2205 13B: 2190 *2245 **2300.
32. Mazda RX-7 (13B) (86-91), p. 424-425, change the specs to read as follows: Weight(lbs): 2300 *2358 *2415.
33. Mercedes-Benz 190E 2.3L (8-valve) (84-93), p. 424-425, change the specs to read as follows: Weight(lbs): 2100 *2153 **2205.
34. Mercury Capri 2.3 (79-86), p. 424-425, correct the specs to read as follows: Prep. Level: 2; change the specs to read as follows: Weight(lbs): 2100 *2153 **2205.
35. Nissan/Datsun 240-Z, p. 424-425, change the specs to read as follows: Weight(lbs): 2200 *2255 **2310.
36. Nissan/Datsun 260-Z, p. 426-427, change the specs to read as follows: Weight(lbs): 2300 *2358 **2415.

37. Nissan 200-SX SE-R, p. 426-427, change the specs to read as follows: Weight(lbs): 2150 *2204 **2258.
38. Nissan 240-SX / S13, p. 426-427, change the specs to read as follows: Weight(lbs): 2320 *2378 **2436.
39. Nissan NX-2000, p. 426-427, change the specs to read as follows: Weight(lbs): 2150 *2204 **2258.
40. Nissan Sentra SE-R (90-94), p. 426-427, change the specs to read as follows: Weight(lbs): 2150 *2204 **2258.
41. Nissan/Datsun HL510 (78-81), p. 426-427, change the specs to read as follows: Weight(lbs): 1900.
42. Porsche 914-6, p. 428-429, change the specs to read as follows: Weight(lbs): 1900.
43. Porsche 924, p. 428-429, change the specs to read as follows: Weight(lbs): 2050.
44. Porsche 944/924S 2.5L (2V) (83-88), p. 428-429, change the specs to read as follows: Weight(lbs): 2250 *2306 **2363.
45. Toyota MR-2, p. 428-429, change the specs to read as follows: Weight(lbs): 1950.
46. Triumph TR4A IRS, p. 428-429, change the specs to read as follows: Weight(lbs): 1830.
47. Triumph TR250, TR6, p. 428-429, change the specs to read as follows: Carb. No. & Type: (3) Weber 40 DCOE or I.R. manifold, 30mm choke(s) req'd.
48. Triumph TR7, p. 430-431, change the specs to read as follows: Weight(lbs): 2000.
49. Volkswagen Golf GTI (87-89), p. 430-431, change the specs to read as follows: Weight(lbs): 1950 *1999 **2048.
50. As approved by the BoD in this FasTrack; reclassify the Volvo 142/142E to FP at 2150 lbs.
51. Volvo P-1800, 1800S, 1800E, 1800ES Sports Coupe, p. 430-431, change the specs to read as follows: Weight(lbs): 1950.

FP

1. Alfa Romeo Giulia Spider Veloce, p. 432-433, change the specs to read as follows: Track(F&R)(in): 55.6 / 54.6, Wheels(max): 15 x 7.
2. Alfa Romeo Giulia Sprint / Spider, p. 432-433, change the specs to read as follows: Track(F&R)(in): 55.6 / 54.6, Wheels(max): 15 x 7.
3. BMW 320i (E21) (77-79), p. 434-435, add to the specs as follows: Notes: Factory 2bbl intake manifold from BMW 2002 is permitted.
4. BMW 320i (E21) (80-83), p. 434-435, add to the specs as follows: Notes: Factory 2bbl intake manifold from BMW 2002 is permitted.
5. BMW 318i (E30) (84-85), p. 434-435, add to the specs as follows: Notes: Factory 2bbl intake manifold from BMW 2002 is permitted.
6. As approved by the BoD in this FasTrack; classify the Elva Courier Mk I, II, & III 1622 & 1798 in FP with Level 1 prep. Add new spec line to PCS-B, p. 434-435, Elva Courier Mk I, II, & III 1622 & 1798, Prep. Level: 1, Weight(lbs): 1622cc: 1800, 1798cc: 1900, Engine Type: 4 Cyl OHV, Bore x Stroke(mm): 76.2 x 88.9, 80.3 x 88.9, Displ.(cc): 1622, 1798, Block Mat'l: Iron, Head Mat'l: Iron, Valves IN & EX(mm): (I)39.9 (E)34.3, Carb. No. & Type: 1622cc: (2) 1.75" SU or Stromberg, 1798cc: (2) 1.50" SU or Stromberg, Wheelbase(mm): 2286, Track (F&R)(in): 53.5 / 54.6, Wheels(max): 14 x 6 (1622cc) 15 x 7 (Mk III 1798cc), Trans. Speeds: 4, Brakes Std.(mm): (F)229 Drum (R)203 Drum, Brakes Alt.(mm): (F)229 Disc (R)254 Drum (w/ MGA axle) (F)279 Disc (R)Mk. 4T 229, Notes: ATB 7224 MGA axle housing assy., Only the Mk III 1622cc is allowed to update to the 1798cc engine including the 15" wheel. A Mk III making this update may use the 13" wheels.
7. As approved by the BoD in this FasTrack; classify the Elva Courier Mk III, IV 1800 & Mk IV R & C in FP with Level 1 prep. Add new spec line to PCS-B, p. 434-435, Elva Courier Mk III, IV 1800 & Mk IV R & C, Prep. Level: 1, Weight(lbs): 1900, Engine Type: 4 Cyl OHV, Bore x Stroke(mm): 80.3 x 88.9, Displ.(cc): 1798, Block Mat'l: Iron, Head Mat'l: Iron, Valves IN & EX(mm): (I)39.9 (E)34.3, Carb. No. & Type: (2) 1.50" SU or Stromberg, Wheelbase(mm): 2286, Track (F&R)(in): 53.5 / 54.6, Wheels(max): 15 x 7, Trans. Speeds: 4, Brakes Std.(mm): (F)229 Drum (R)203 Drum, Brakes Alt.(mm): (F)229 Disc (R)254 Drum (w/ MGA axle) (F)279 Disc (R)Mk. 4T 229, Notes: Mk IV T R&C have IRS, Mk III & IV 1800 have live axle. ATB 7224 MGA axle housing assy.
8. Classify the Fiat X/1-9 & Bertone 1300 as a Level 1 car in FP.
   Add new spec line to PCS-B, p. 436-437, Fiat X/1-9 & Bertone 1300, Prep. Level: 1, Weight(lbs): 1715, Engine Type: 4 Cyl SOHC, Bore x Stroke(mm): 86.0 x 55.5, Displ.(cc): 1290, Block Mat'l: Iron, Head Mat'l: Alum, Valves IN & EX(in): (I)1.43 (E)1.21, 1.23, Carb. No. & Type: (1) Weber 32 DMTR or DATRA/100 w/ 32mm primary & secondary throttle bores, (1) 40 DCNF w/ 32mm choke(s), Wheelbase(in): 86.7, Track(F&R)(in): 56.3 / 56.6, Wheels(max): 13 x 7, Trans. Speeds: 5, Brakes Std.(in): (F&R)8.94 Disc, Brakes Alt(in): (F&R) 10.0 x .40 Disc (Lancia), Notes: Top panels may remain in place if securely bolted or pinned. Alt. Crankshaft: #4292177. Engine hatch rain tray may be removed. Trunk mounted fuel cell allowed. Orientation of the alternate carburetor is unrestricted. The alternate carb adapter may not be thicker than 1.25 inches. The adapter may have a bore larger than the throttle bore of the approved alternate carburetor.
9. As approved by the BoD in this FasTrack, classify the Honda Civic Si (88-91) in FP with Level 1 prep.
   Add new spec line to PCS-B, p. 436-437, Honda Civic Si (88-91), Prep. Level: 1, Weight(lbs): 2075, Engine Type: 4 Cyl SOHC, Bore x Stroke(mm): 75.0 x 90.0, Displ.(cc): 1590, Block Mat'l: Alum, Head Mat'l: Alum, Valves IN & EX(mm): (I)29.0 (E)25.0, Carb. No. & Type: (1) 40 DCOE w. 34mm choke(s), (2) auto-type sidedraft w/ 32mm choke(s) on I.R. manifold, or fuel injection, Wheelbase(mm): 2499, Track (F&R)(in): 61.4 / 61.3, Wheels(max): 15 x 7, Trans. Speeds: 5, Brakes Std.(mm): (F)241 Disc (R)180 x 38 Drum, Brakes Alt.(mm): (R)239 Disc, Notes: Single 40 DCOE requires "dual Y" manifold w/ no balance tubes or plenums.
10. As approved by the BoD in this FasTrack, classify the Honda CRX Si (88-91) in FP with Level 1 prep.
    Add new spec line to PCS-B, p. 436-437, Honda CRX Si (88-91), Prep. Level: 1, Weight(lbs): 2075, Engine Type: 4 Cyl SOHC, Bore x Stroke(mm): 75.0 x 90.0, Displ.(cc): 1590, Block Mat'l: Alum, Head Mat'l: Alum, Valves IN & EX(mm): (I)29.0 (E)25.0, Carb. No. & Type: (1) 40 DCOE w. 34mm choke(s), (2) auto-type sidedraft w/ 32mm choke(s) on I.R. manifold, or fuel injection, Wheelbase(mm): 2304, Track (F&R)(in): 61.4 / 61.7, Wheels(max): 15 x 7, Trans. Speeds: 5, Brakes Std.(mm): (F)241 Disc (R)180 x 38 Drum, Brakes Alt.(mm): (R)239 Disc, Notes: Single 40 DCOE requires "dual Y" manifold w/ no balance tubes or plenums.
11. Lotus Super Seven, p. 438-439, add to the specs as follows: Notes: Suspension components can pass through exterior bodywork. Front fenders may be modified as described here. The fender mounting flange shall be a minimum of 50 inches in length. At the rear of the fender, the lower edge of the mounting flange shall extend no higher than 4-1/2 inches above the undertray of the vehicle. At a point 6 inches rearward from the front of the flange, the fender shall be no narrower than 16-7/8 inches as meas-

ured along the upper curvature. At a point 18 inches rearward from the front of the flange, the fender shall be no narrower than 7 inches along the upper curvature and from 34 inches to 48 inches, the fender shall be no less than 3"inches along the upper curvature. From 48 inches rearward, a radius may provide a transition between the outer and the rearmost fender edges. The contours resulting from this modification shall be gradual and describe a smooth curve in plan view. A diagram is available from SCCA. No further modifications are allowed.

12. As approved by the BoD in this FasTrack; classify the Lotus Mk 46, 54, 65 Europa in FP with Level 1 preparation.
    Add new spec line to PCS-B, p. 438-439, Lotus Mk 46, 54, 65 Europa, Prep. Level: 1, Weight(lbs): 1630, Engine Type: 4 Cyl OHV, Bore x Stroke(mm): 75.9 x 81.0, 77.0 x 84.1, Displ.(cc): 1470, 1565, Block Mat'l: Alum, Head Mat'l: Alum, Valves IN & EX(mm): (I)37.6 (E)31.2, Carb. No. & Type: (1) Solex 1 3/8" DIDSA2, (1) Weber 45 DCOE w/ "Dual-Y" manifold., Wheelbase(mm): 2311, Track (F&R)(in): 56.7 / 56.7, Wheels(max): 13 x 7, Trans. Speeds: 4 or 5, Brakes Std.(mm): (F)229 Disc (R)203 Drum, Brakes Alt.(mm): (F)244 Disc (R)231 Disc from twin cam, Notes: Renault R-16 (non-crossflow) cylinder head casting. Trunk mounted fuel cell is permitted. Any available transaxle with the same number of forward gears mounted in the standard position.
13. As approved by the BoD in this FasTrack; classify the Lotus Super Seven Series Four in FP with Level 1 prep.
    Add new spec line to PCS-B, p. 438-439, Lotus Super Seven Series Four, Prep. Level: 1, Weight(lbs): 1810, Engine Type: 4 Cyl OHV, Bore x Stroke(mm): 81.0 x 77.7, Displ.(cc): 1599, Block Mat'l: Iron, Head Mat'l: Iron, Valves IN & EX(mm): (I)38.4 (E)31.8, Carb. No. & Type: (1) Weber 32 DFM, DFD w/ 28mm primary and 28mm secondary, (1) Weber DCNF w/ 28mm choke(s), Wheelbase(mm): 2286, Track (F&R)(in): 52.4 / 55.1, Wheels(max): 13 x 6, Trans. Speeds: 4, Brakes Std.(mm): (F&R)229 Disc, Brakes Alt. (F) 244 Disc, Notes: Headlights and associated hardware may be removed. NOTE: Rear edge of fenders shall be 4.5" above body undertray. Floor pans: one right and one left, attached to bottom of frame tubes. Area beneath transmission / drive-shaft shall remain open.
14. As approved by the BoD in this FasTrack; classify the Volvo 142 / 142E in FP with Level 1 prep.
    Add new spec line to PCS-B, p. 444-445, Volvo 142 / 142E, Prep. Level: 1, Weight(lbs): 2150, Engine Type: 4 Cyl OHV, Bore x Stroke(mm): 88.9 x 80.0, Displ.(cc): 1986, Block Mat'l: Iron, Head Mat'l: Iron, Valves IN & EX(mm): (I)44.0 (E)35.0, Carb. No. & Type: (2) Auto-type sidedraft w/ 32mm choke(s) on I.R. manifold, or fuel injection, Wheelbase(mm): 2616, Track (F&R)(in): 55.7 / 55.7, Wheels(max): 15 x 7, Trans. Speeds: 5, Brakes Std.(mm): (F)272 Disc (R)295 Disc, Notes: Bosch Fuel Injection.
15. As approved by the BoD in this FasTrack; reclassify the Volvo 142 / 144 2.0 (69-74) to GP at 2100 lbs.

GP

1. As approved by the BoD in this FasTrack; classify the Volvo 142 / 144 2.0 (69-74) in GP with Level 2 prep.
   Add new spec line to PCS-B, p. 452-453, Volvo 142 / 144 2.0 (69-74), Prep. Level: 2, Weight(lbs): 2100 *2153 **2205, Engine Type: 4 Cyl OHV, Bore x Stroke(mm): 88.9 x 80.0, Displ.(cc): 1986, Block Mat'l: Iron, Head Mat'l: Iron, Valves IN & EX(mm): (I)44.0 (E)35.0, Carb. No. & Type: Fuel injection, Wheelbase(in): 103.0, Track (F&R)(in): 55.7 / 55.7, Wheels(max): 15 x 7, Trans. Speeds: 5, Brakes Std.(mm): (F)272 Disc (R)295 Disc, Notes: Comp. Ratio limited to 12.0:1, Valve lift limited to .450".

HP

1. BMW 1600 (68-71), classified in TB 08-01, change the specs to read as follows: Wheels(max): 13 x 7.
2. Toyota Corolla (71-74), classified in TB 08-01, correct the specs to read as follows: Carb. No. & Type: Carburetion, Notes: Comp. Ratio limited to 11.0:1, Valve lift limited to .450".

Showroom Stock

SSB

1. Honda Civic Si (06-07), p. 491, add to the specs as follows: add the 08 model year, Notes: Honda Factory Performance Suspension Kit #08W60-SVB-100 allowed.
2. Mini Cooper S (02-04) p. 492, add to the Notes as follows: JCW struts (F)31 31 6 768 410 (R)33 52 6 768 412, springs (F)31 33 6 768 415 (R)33 53 6 768 418, and Mini Mania strut tower plate NMS7300 permitted.
3. Mini Cooper S (05-06), p. 492, add to the Notes as follows: JCW struts (F)31 31 6 768 410 (R)33 52 6 768 412, springs (F)31 33 6 768 415 (R)33 53 6 768 418, and Mini Mania strut tower plate NMS7300 permitted.

SSC

1. Volkswagen Rabbit 2.5 (06-07), p. 498, add to the specs as follows: Tire Size (stock): 195/40 max., Notes: This max. tire size supersedes SSCS section 9.1.7.E.7.

Spec Miata

1. As approved by the BoD in this FasTrack; effective upon publication, add a new section 3. to section 9.1.8.C.1.e, p. 503, to read as follows:
   3. The post catalytic converter oxygen sensor may be disabled, replaced, or removed; the resulting hole (if present) may be plugged.
2. Section 9.1.8.C.1.f, p. 503, clarify by adding the following after the third sentence: *If the 1994 flywheel is used it shall weigh a minimum of 18.5 lbs.*
3. Section 9.1.8.C.3, p. 504, insert a new section e. to read as follows:
   e. Lubricants may be substituted with any lubricant.
4. Add the end following to the end of section 9.1.8.C.4.b, p. 505,: *A spacer as shown below may be added between the Mazda bump stop and the 1999 shock hat. The 0.31" measurement is +/- 0.01 in. All other measurements are non-critical and are shown for clarification purposes only.*

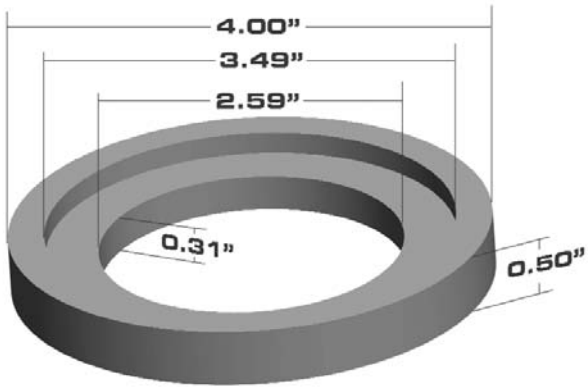

Sports Racing

CSR

1. Section 9.1.9.A.2.a. CSR Engine Table, p. 519, change line D. 4 cycle Motorcycle-based engines (1300cc), Weight(lbs) carb/F.I.: 1075 / 1075.
2. Section 9.1.9.A.2.a. CSR Engine Table, p. 519, change line E. 4 cycle Motorcycle-based engines (1400cc), Weight(lbs) carb/F.I.: 1125 / 1125.
3. Section 9.1.9.A.2.a. CSR Engine Table, p. 519, change line H. 4 cycle Motorcycle-based engines (1615cc), Weight(lbs) carb/F.I.: 1175 / 1175.

SRF

1. Section 9.1.9.C.4, p. 536, add a new section e. to read as follows:
   e. A 16 gauge steel plate measuring 10" x 28" may be added under the fuel cell bladder above vehicle floor.
2. As approved by the BoD in this FasTrack; effective upon publication, change section 9.1.9.C.5.k, p. 534, by creating a new section l. for the third paragraph to read as follows:
   l. Required Bodywork Modification:
   A 22.5" diameter wheel arch ~~may~~ *shall* be cut in each side of the tail section. Viewing the tail section from the side, draw a vertical line at the drive axle centerline. Locate the top of the wheel arch at a point measured from the bottom edge of the tail section 9.25" vertically along the centerline. The 22.5" diameter circle intersects the bottom edge of the tail section 11.1" either side of the centerline. The tail section may be reinforced in the forward and aft portions of the wheel arch. Dimension tolerance is +/- 0.75".
3. Section 9.1.9.C Spec Racer Ford Engines, p. 543, change l. to read as follows: PCV Valve: ~~ONLY~~ Motorcraft #EV-147 *or as supplied by SCCA Enterprises, Inc.*

Touring

T2

1. BMW 335Ci (2007), p. 579, **Effective 4/1/08**, add to the specs as follows: (2) 29.5mm Turbo Inlet Restrictors required.
2. Lotus Elise (2005), p. 581, change the specs to read as follows: Weight(lbs): 2090.
3. Lotus Exige (06-07), p. 581, change the specs to read as follows: Weight(lbs): 2090.
4. Mitsubishi Lancer Evo 8/9/RS/GSR/MR (03-06), p. 581, **Effective 4/1/08**, add to the specs as follows: 42.5mm Turbo Inlet Restrictor required.
5. Pontiac Solstice GXP (07-08), p. 582, **Effective 4/1/08**, add to the specs as follows: 39mm Turbo Inlet Restrictor required.
6. Subaru Impreza WRX STI (03-06), p. 582, **Effective 4/1/08**, add to the specs as follows: 42.5mm Turbo Inlet Restrictor required.

T3

1. Honda S2000 (00-07), p. 583, add to the specs as follows: Tire Size: 275/40 max., Notes: Springs and Sway bars from 2008 S2000 CR allowed. This max tire size supersedes TCS tire rule section 9.1.10.D.7.b.
2. Volkswagen GTI, classified in TB 08-01, **Effective 4/1/08**, change the specs to read as follows: Weight(lbs): 3100, Notes: 34mm Turbo Inlet Restrictor required.

COURT OF APPEALS

JUDGEMENT OF THE COURT OF APPEALS
Rules Interpretation – FC, FF Internal Engine Coatings COA 07-02-RI
January 18, 2008

PRIOR PROCEEDINGS AND FACTS IN BRIEF
Arthur E. Smith submitted a request for Rules Interpretation to SCCA on June 12, 2007, asking if the Formula Continental Preparation Rule GCR 9.1.1.B.1.c.12. prohibits painting the inside of the engine block with the same material as used on the outside. After a membership issue was resolved, a First Court comprised of Angelo Gazzola, Norm Floyd, Joseph Hobbs, and Stephen Harris, Chairman, met and extensively reviewed the GCR not only for FC classifications, but for other restricted classes. The First Court concluded that this internal coating would be non-compliant. This ruling was forwarded to the Court of Appeals for review.

DATES OF THE COURT
The Court of Appeals (COA), Dick Templeton, Dave Nokes, and Bob Horansky, Chairman, met on January 10 and 17, 2008, to review the First Court's decision.

DOCUMENTS AND OTHER EVIDENCE RECEIVED AND REVIEWED
1. Letter requesting rules interpretation from Arthur E. Smith, dated June 12, 2007.
2. Letter from Wyndi McCormick, SCCA Club Racing, to Arthur E. Smith, dated June 19, 2007 requesting his member number.
3. Report of the Steward's Committee for Rules Interpretation Regarding Internal Engine Components, dated December 20, 2007, received by the COA on January 3, 2008.

FINDINGS
On June 12, 2007 Arthur E. Smith requested a rules interpretation under 2007 GCR Paragraph 8.1.4. related to the painting of the internal surfaces of the crankcase and main bearing caps of FC engines (Ref. 9.1.1.B.1.c.12.). At that time, Mr. Smith was not a member of SCCA. Mr. Smith joined SCCA in August 2007. Per GCR 8.1.4., the Chairman of the Stewards program then appointed a First Court to review the interpretation. This First Court, comprised of Executive Stewards from different Divisions, analyzed multiple sections of the GCR, interviewed the Chairman of the Club Racing Board, two engine builders, and Mr. Smith. Their conclusion was that the painting or coating of the inside of the crankcase to include main bearing caps is non-compliant under the provisions of "Blueprinting".

The COA has reviewed the Rules Interpretation Report of the First Court. As Mr. Smith's rules interpretation request and ruling of the First Court were 2007 actions, the COA performed its review under the terms of that rulebook. It also noted that Mr. Smith specifically focused on internal crankcase surface coating for FC and CFF engines. The COA notes that both FC and FF are restricted classes based on stock engines. Both the Formula Continental and the Formula Ford Preparation Rules are clear that the only allowable modifications, changes, or additions from the stock engine must be stated in the GCR and that there are no exceptions to this rule. Coating or painting of internal crankcase surfaces is not specifically allowed, therefore internal painting of the block is not allowed.

DECISION
The Court of Appeals concurs with the First Court. The coating or painting of the internal surfaces of the crankcase of FC and FF engines is non-compliant with the 2007 GCR. This ruling is also consistent with the recently published 2008 GCR.

COURT OF APPEALS

Judgment of the Court of Appeals
Phil Simms vs. SOM, COA Reference 08-01-SE
February 14, 2008

PRIOR PROCEEDINGS AND FACTS IN BRIEF
Following the first on-course session for GT1 cars at the Frank Meleney & Dick Springer Memorial National held January 11-13, 2008 at Homestead-Miami Speedway, Sandra Jung, Chief of Timing and Scoring, filed a protest against Phil Simms (GT1 #11) alleging a violation of GCR 9.3.28.A, as she did not approve of the car's numbers. The SOM, Robert Windisch, Sherri Croyle and Rick Mitchell, Chairman, met, received testimony from Mr. Simms, Ms. Jung and Chief Steward Pete Magnuson. Following their deliberations, the SOM determined that Mr. Simms' car was in violation of GCR 9.3.28.A and required the numbers be made compliant subject to the review of the Chief of Timing and Scoring. Mr. Simms appealed that decision.

DATES OF THE COURT
The National Court of Appeals (COA), David Nokes, Richard Templeton and Robert Horansky, Chairman, met on January 31, and February 7 and 13, 2008 to hear, review and render a decision on the appeal.

DOCUMENTS AND OTHER EVIDENCE RECEIVED AND REVIEWED
1. Appeal from Phil Simms and accompanying documents, including photos of Car 11 received January 28, 2008.
2. Official Observers Report and related documents received January 28, 2008.

3. Email dated January 30, 2008 from Clyde Bales, Timing and Scoring DA-SEDIV.
4. Email dated January 29, 2008 from Rick Mitchell, Chairman SOM.
5. Email dated January 31, 2008 from Sandra Jung, Chief of Timing and Scoring.
6. Emails dated February 1 & 2, 2008 from Pete Magnuson, Chief Steward.
7. Email dated February 5, 2008 from Sherri Croyle, SOM.

FINDINGS

Following the first on-course session for GT1 cars, the Chief of Timing and Scoring spoke to the Operating Steward regarding Mr. Simms' number issue and asked that the numbers be made more legible, perhaps by providing more contrast. Ms. Jung stated that the Operating Steward advised her that there was nothing she could do as Mr. Simms would not change his numbers. Ms. Jung then stated she went to the Chief Steward who advised that he would speak to Mr. Simms about the problem. Ms. Jung then filed her protest against Mr. Simms.

Mr. Simms' appeal letter stated that the numbers had been the same for several years, and that the car had passed annual tech and competed with the same set of numbers at an event the week before at Sebring. The COA noted that the photos of Mr. Simms' car that were included with the appeal were date-stamped May 6, 2007. There were no pictures submitted from the January 11-13 event.

DECISION

Mr. Simms submitted no new evidence to substantiate his appeal and the COA upholds the First Court. However, the COA noted several ambiguities with the evidence provided from the event. Accordingly, the COA finds that Mr. Simms' appeal was well-founded and directs that his appeal fee, less the amount retained by SCCA, be returned to him.

SOLO EVENTS BOARD MINUTES

SEB MINUTES | *January 23, 2008*

The Solo Events Board met by conference call January 23rd. Participating were board members Jason Isley, Steve Wynveen, Chris Dorsey, Ron Bauer, Donnie Barnes, Tina Reeves, Dave Whitworth, Rick Myers, and Erik Strelnieks. Also participating were Doug Gill of the National Staff and Lisa Noble of the BOD. These minutes are presented in topical order rather than in the order of discussion.

GENERAL

- The SEB discussed potential members for an Appeals Committee (per Solo Rules section 10.4) for handling appeals of protest decisions at national-level Solo events.
- The SEB discussed the ongoing issue of class participation levels and potential changes to Solo Rules section 4.9.
- Plans and supplemental regulations for the 2008 Solo Nationals will be reviewed at the National Convention in February.

STOCK CATEGORY

- The SEB approved the addition of Drew VanderPloeg to the SAC.

STREET TOURING CATEGORY

- Mike Simanyi was approved as the Chair of the STAC.

PREPARED CATEGORY

- Steve Garnjobst was approved as a new member of the PAC.

STREET MODIFIED

- The SEB thanks Bob Kaspryck for his service to the SMAC, and approved the addition of Chris Travis to that committee.

MODIFIED CATEGORY

- The SEB thanks Art Trier for his service on the MAC.

SOLO EVENTS BOARD MINUTES

SEB MINUTES | *Feb. 8-10, 2008*

The Solo Events Board met at the SCCA National Convention February 8-10. Attending were SEB members Rick Myers, Dave Whitworth, Chris Dorsey, Tina Reeves, Jason Isley, Donnie Barnes, Steve Wynveen, Erik Strelnieks; Doug Gill, Nancy Downing, and Howard Duncan of the National Staff. These minutes are presented in topical order rather than the order discussed.

Unless noted otherwise the effective date for all rule, class, and listing change proposals herein is 1/1/2009.

GENERAL

- The Rocky Mountain Division and Southern Pacific Division SEB positions will be open at the end of 2008. Members interested in these positions are invited to submit their qualifications in writing to the SEB and BOD via the National Office.
- The NEDiv, SoPac, and CenDiv Divisional Solo Events Stewards positions are currently vacant. Members interested in these positions are invited to submit their qualifications in writing to the SEB via the National Office.
- The Board thanks Josh Hadler for his service to the Club as a Divisional Solo Safety Steward.
- Due to the recent change requiring SCCA membership in order to be a competitor in SCCA Solo events, which also applies to Formula Junior drivers, the first event is NOT exempt from the membership requirement.
- The SEB has updated the content and status of its Strategic Plan.
- The National Appeals Committee will be chaired by Art Trier. Finalization of the members of this committee will be noted in upcoming issues of Fastrack.
- The SEB is seeking feedback on the possibility of making the currently-recommended Sound Control policy (Appendix I) a required section.
- The following rule change proposals are being published for member feedback:
    - Move 2.2.0 to a new subsection of 1.3.2 and change its first sentence to read as follows: "Cell phones, video cameras, and still cameras are not permitted at course worker positions or other locations within the course area…."
    - Add a new subsection of 1.3.2 as follows: "Course workers must be standing at all times when any competition car(s) are on-course during the event."
    - Change the first part of Section 4.9 to read "If in three consecutive years…."

SOLO NATIONALS

- The SEB reviewed and approved proposed Supplemental Regulations, preliminary class run day assignments, and Chiefs as presented by event Chair Kathy Barnes and Solo Manager Nancy Downing, and approved Roger H. Johnson and Karen Babb as course designers.
- The SEB approved the running of Formula Junior A and B as supplemental classes at the Solo Nationals.

STOCK

- The SEB approved the addition of Pat Salerno to the SAC.
- The following rule change proposal has been provided by the SAC and is being published for member comment:
  - Add to 13.9 as follows: "Additional battery hold-down hardware may be added. It may serve no other purpose." (ref. 07-397)

STREET TOURING

- The SEB approved the addition of Pat Washburn to the STAC.
- The following listing change proposal has been provided by the STAC and is being published for member feedback: Add the BMW E46 M3 to class STU. (ref. 07-001)
- The following rule change proposals have been provided by the STAC and are being published for member feedback:
  - Remove the word "single" from 14.12.3 in class STX. *Note*: this will allow any forced-induction configuration.
  - Change 14.12.4 such that the maximum tire size is 265 and the maximum rim width is 9.0 inches, for 2WD (FWD or RWD) only.

STREET PREPARED

- The SPAC is seeking member feedback on the following classing change proposals:
  - Move from BSP to ASP, Subaru WRX STi and Mitsubishi Evo.
  - Move from ASP to BSP, on a separate line from other models: BMW M Coupe, M Roadster, and Z3 (6-cyl) (ref. 07-448)
  - Move from DSP to FSP, on separate line, Toyota Corolla GTS AE86 ('85-'87 RWD) and add line in FSP for Toyota Corolla GTS AE92 ('90-'91 FWD)
  - In FSP, add a listing for Toyota Echo ('99-'05) and Scion xA ('04-'06) on one line. (ref. 07-411)

STREET MODIFIED

- The following rule change proposals have been provided by the SMAC and are being published for member comment:
  - Replace 16.1.I with: "Front hoods, engine covers, trunk lids and hatches not containing glass, front fenders, rear fenders not part of chassis structure (unibody), front & rear facias, and side skirts may be modified or replaced, and may be attached with removable fasteners. Associated hardware including latches, hinges, and window washer nozzles may be modified, removed, or replaced. This does not permit removal of the remainder of the window washer system. Fenders may be flared as per Street Prepared. Non-metallic fender liners may be modified, replaced, or removed." Note: This proposal is intended to allow less expensive and more readily available ways for cars to achieve their calculated minimum weight.
  - Add to 16.2: "Cars running tires with a rated width of 275 or less on all four wheels may compete at a minimum weight 200 pounds less than their calculated weight per Appendix A. "
  - In Appendix A, STREET MODIFIED CATEGORY, change subsection 3 to read (change shown in italics): "…These units will be classified on the basis of a piston displacement equivalent to *0.9 liters times the number of rotors,* plus the volume determined by…"
  - Add new subsection in 16.1 as follows: "OE side mirrors may be replaced by aftermarket units, provided they mount in the same location, perform the same function as the OE mirrors, and have a reflective surface area greater than 15 sq. inches."
  - Change the AWD displacement factor in both SM and SM2 from +275 lbs/liter to +325 lbs/liter.

PREPARED

- The following rule change proposals have been provided by the PAC and are being published for member comment:
  - Change subsection 1.b under BODYWORK AND STRUCTURE of Prepared Class X in Appendix A to read as follows (changes shown in italics):

    "b. Hoods (engine covers), front fenders, front & rear fascias, and side skirts may be added, modified or replaced without penalty. *All cars may choose to modify or replace the front or rear (engine cover or trunk lid), but not both.* Fenders may be flared as per Street Prepared (15.2.A) or Prepared (17.2.L, 17.2.M). Non-metallic fender liners may be modified, replaced, or removed. Body panels may be attached with removable fasteners (e.g. Dzus)."
  - Change 17.10.Q under ENGINE AND DRIVETRAIN to read as follows:

Q. Transmission

1. The stock transmission without modification may be used
2. *Any mechanical shift linkage or mechanism for changing gears may be used, including use of lockout mechanisms. The shift lever opening in the body of the car may be altered to allow the installation of alternate shift linkage.*

3. If a modified stock transmission, or a transmission from another source is used:

a) Any non-sequential manual transmission is allowed. Any automatic sequential transmission employing a torque converter is allowed.

b) *Pneumatic, hydraulic, or electronically controlled shifting is not allowed for manual transmissions, except for electrically-controlled overdrive manual transmissions in cars which were originally equipped with them.*

c) *Hydraulic/electric shifting mechanisms may be modified in automatic sequential transmissions employing a torque converter.*

d) *Gear ratios may be modified.*

e) A functional reverse gear is not required.

f) The transmission tunnel/cover may be altered to allow the installation of an alternate transmission and/or driveshaft. Cars originally equipped with a removable transmission tunnel/cover may substitute a tunnel/cover of an alternate material.

- Change Appendix A, Prepared Classes, to add "All listed weights are with driver." Also add 200 lbs. to all weights for cars in all Prepared classes. (ref. 07-147)

- Change 17.2.F, to add language as follows: "This requires a sealed firewall between engine and passenger compartment. This rule is for the driver's safety. Completely sealing all firewall openings is strongly encouraged, but no gap may be larger than 1/8 inch."

- Change 17.10.D and 17.K.4 as follows (new language in italics):

17.10.D.3: "Any throttle linkage may be used. All throttle linkages shall be equipped with more than one system of positive throttle closure. *Any throttle pedal may be used."*

17.10.K.4: "Any clutch is permitted. *The linkage between the clutch pedal and the clutch housing/clutch actuating mechanism is unrestricted. A mechanical linkage may be replaced with a hydraulic system. Any clutch pedal may be used."*

- Change 17.2.I to read as follows (new language in italics): "The driver seat may be replaced with a seat of any origin. All passenger seats may be removed or replaced with seats of any origin. *Driver's seat must remain on the stock side of the car and may not cross the centerline of the car. The seat may be relocated fore/aft by up to 12" based on the centerline of the original front and rear mounting points. Rear bulkhead of the driver/passenger compartment may not be removed to relocate seat and driver's seat may not extend rearward past the bulkhead.*

- *Change 17.2.P.2, beginning with the third sentence, to read as follows: "Alternately, in a hatchback, the spoiler may be mounted to the rear hatch lid at or near the top of the hatch; in such a configuration the spoiler may extend no more that 7.5 inches from the original bodywork in any direction."*

F125

- The following rule change proposals have been provided by the KAC and are being published for member comment:
  - Change 19.1.D.1.f.2 to specify a 20 lbs. weight penalty instead of 30 lbs. for non-OE ignition.
  - Change 19.1.D.2 to specify a 35 lbs. weight penalty for ICC motors.

FORMULA JUNIOR

- The following rule change proposal has been provided by the KAC and is being published for member comment:
  - Change 19.2.A.2 to add the following: "For regions with approved 5-8 year old programs the kart must be powered by a Comer 50/51 stock motor. No other 2 cycle or 4 cycle kart motors , regardless of restriction, will be used for this special class without prior review of the SEB."

REFERRED TO COMMITTEE FOR FOLLOWUP

- SPAC: Language regarding "brake kits" (ref. 07-455)
- SPAC: Seat rule, language (*Note*: also affects SM)
- SSC: Scion xA safety issues (ref. 07-411)
- STAC: Motor mounts (ref. 08-006)
- SMAC: Fenders, mini-tubbing (ref. 07-423)

NOT RECOMMENDED

- Stock:
  - Mustang Shelby GT reclassing (per SAC; ref. 07-394, 07-415)
  - Nissan 350Z reclassing (per SAC; ref. 07-426)
  - Suzuki Aerio (per SAC; ref. 07-433)
  - Older car parts substitution (per SAC; ref. 07-434)
- Street Touring:
  - Restructuring and allowing Porsches et.al. (ref. 08-047)
- Street Prepared:
  - Saleen Mustang listings (per SPAC, ref. 07-449)
  - Combine BMW M Coupe, Z3 (6-cyl) and M Roadster with E36's in BSP (per SPAC, ref. 07-448)
  - Brake rotors (per SPAC, ref. 07-455)

TECH BULLETINS

1. Stock: The following new listings, effective immediately upon publication, have been recommended by the SAC and approved by the SEB:

Audi TT 2.0 turbo ('08+)	GS (ref. 07-411)
Nismo 350Z ('07+)	BS (ref. 08-012, 08-013)
Honda Civic Si Mugen ('08+)	GS (ref. 07-444)

2. Stock: The references to 13.2.F should be 13.2.G, in the Appendix F clarification regarding Corvette spare tire covers.
3. Stock: The references to 13.1.H should be 13.2.I, in the Appendix F clarification regarding harness bars.
4. Street Touring: The following sentence should be at the end of 14.9.A: "The area under the rearmost seat is considered to be within the passenger compartment." *Note*: this is the same language as appears in 15.9.C. (ref. 07-458)
5. Street Prepared: The SPAC has provided the following listing correction: Under Ford/Mercury in ESP, remove the "Capri Turbo 4" line and Replace: "Mustang & SVO & Cobra R, V6 & V8 ('79-'93)" with: "Mustang & SVO & Cobra & Cobra R (79-93) & Capri (79-86), V6 & V8 & Turbo 4" (ref. 07-449)
6. Prepared, Errors and Omissions: the CP weight penalty for oversize wheels in 17.2.G should be 100 lbs. not 200 lbs.
7. Prepared, Errors and Omissions: the following cars should be listed in FP as a result of changes approved in 2007: Toyota MR2 Turbo ('91-'95), Porsche 924 Turbo, Chrysler/Dodge/Plymouth/Eagle/Mitsubishi Conquest Turbos
8. Prepared: The following new listing, effective immediately upon publication, has been recommended by the PAC and approved by the SEB: Mazda MX-5 ('06+) on a separate line in DP.
9. Modified: The DM and EM weights and adders as shown in Section 18 are correct, in cases where they may conflict with what appears in Appendix A. For 2009 the weight and adder data for these classes will be moved to, and appear only in, Appendix A.
10. Modified: Appendix A, Modified Class F, add to subsection D.3.f (rear brake assemblies): "Two piece rear brake rotor assemblies are also allowed. Rotors must be of ferrous material. Hubs and hats may be made of ferrous material or aluminum. These allowances also apply to front brakes."
11. Modified: Appendix A, Modified Class F, add to subsection E.2 (upgraded vee engines): "Increased displacement engines up to 1915 cc are restricted to maximum valve sizes 39 mm intake, 32 mm exhaust."
12. Formula Junior: The second sentence of 19.2.C is clarified as follows (change shown in italics): Tire compound is restricted to Bridgestone YHC or other tire manufacturer's models with *the manufacturer's published* durometer readings of 58 or higher." (ref. 07-445)

RALLYCROSS BOARD MINUTES

RXB MINUTES | *Jan. 14, 2008*

The RallyCross Board met in conference call on January 14, 2008. Members in attendance were Matt Nichols, Tom Nelson, Mark Utecht, and Mark Walker (Chair). Others present were Pego Mack, Rally Manager

Safety Committee Report:

The RallyCross Safety Committee is looking to expand. Persons interested must currently possess a SCCA Safety Steward license in any area.

Rules Committee Report:

The rules committee has made a number of recommendations on the following issues.

Motion: (Utecht/Nelson) Send out for member comment for inclusion into the 2009 rule set: Add section 6.2.E.17: Batteries may be substituted with any size, shape or make. Relocation of the battery or batteries is permitted. Longer battery cables may be substituted to permit relocation, and holes may be drilled to accommodate mounting of the battery and cables. (Armstrong) (ALL FOR)

Motion: (Utecht/Walker) Send out for member comment for inclusion into the 2009 rule set: Modify section 6.2.D.14: Vehicles may substitute one differential with a mechanically governed limited slip or locking unit of an alternate type. This includes spools and welded stock differentials. This does not allow the use of a differential with external controls (electronic or otherwise) to regulate slip or locking. Differentials must be contained in a stock unmodified housing/third member with stock or optional ring and pinion ratios available for the specific model, body, and year of the vehicle only. 4wd vehicles may not substitute more than one differential with an alternate type. (Lanctot) (ALL FOR)

Motion (Utecht/Nichols) No changes at this time to add a requirement or recommendation for roll bars. Members are reminded to follow manufacturer's installation requirements on all restraint systems. (Armstrong) (ALL FOR)

Motion (Utecht/Nelson) Issue a general clarification that steering systems are considered part of the suspension components for rules compliance. (Armstrong) (ALL FOR)

Motion (Utecht/Walker) Deny request to add provision for camber bolts in Rally Prepared. The RxB feels the current provisions for camber adjustment are adequate at this time. (Kaslo) (ALL FOR)

Old Business:

The RxB is looking for members to join our New Region Program Development committee.

New Business:

The RxB extensively discussed the rules making process in regards to member input.
The RxB agrees that communication is important, and strives to communicate with the membership as completely as possible. We also recognize the importance of confidentiality in regards to communication with the RxB and the balancing act required to meet both of these needs. Members with concerns in any area of RallyCross are encouraged to contact the RxB, either electronically or otherwise, at any time.

The meeting was adjourned at 9:45pm (Utecht/Nichols)

ROADRALLY BOARD MINUTES

RRB MINUTES | *Jan. 22, 2008*

The *RoadRally* Board (RRB) met via conference call on Tuesday, January 22, 2008.

Attending were: Kevin Poirier, Chairman, Chuck Edwards, Secretary, members Rick Beattie, Lois Van Vleet and Jim Wakemen, Jr. Also attending were Duck Allen, Board Liaison,and Pego Mack, National Office Rally Manager.

Chairman Poirier called the meeting to order at 7:30 pm CST.

On motion duly made and seconded the December 2007 minutes were APPROVED.

Photo Contest

Rules for the upcoming RoadRally Photo Contest were discussed. Photos must have been taken within the past 3 years of the date

of submission and must be received by November 15, 2008. More details will be discussed at the 2008 National Convention and will be published to the membership thereafter.

2008 National Convention

The RRB reviewed the schedule for the convention and accepted volunteers for the various presentations.

2008 United States Road Rally Championship

The 2008 USRRC was discussed but the dates are not firm because certain relevant dates in the state of Oregon are unknown. The likely dates remain October 17, 18, 19, 2008.

New RRB Member Jim Wakemen, Jr.

The SCCA Board of Directors appointed Jim Wakemen, Jr. to the RoadRally Board at its December meeting.

There being no further business and no objections, the meeting adjourned at 8:48 pm CST.

Next Meeting

The next meeting of the RRB will be at the convention in San Antonio.

QUICK LINKS

The following items have been removed from regular inclusion in FasTrack News and can be found on SCCA's Web site at the following links:

CLUB RACING

Accredited Driver Licensing Schools: http://www.scca.com/contentpage.aspx?content=39

Forms: http://www.scca.com/contentpage.aspx?content=45

Technical Forms: http://www.scca.com/contentpage.aspx?content=74

Scrutineer's Forms: http://www.scca.com/contentpage.aspx?content=77

Vehicle Homologation Forms: http://www.scca.com/contentpage.aspx?content=79

General Competition Rules (GCR): http://www.scca.com/contentpage.aspx?content=44

SOLO

Forms: http://www.scca.com/contentpage.aspx?content=60

Rulebook: http://www.scca.com/contentpage.aspx?content=61

RALLY

Forms: http://www.scca.com/contentpage.aspx?content=49

Rulebook: http://www.scca.com/contentpage.aspx?content=50

SCCA NATIONAL CONVENTION

Event page: http://www.scca.com/event.aspx?hub=6&event=11083

EVENT CALENDAR: http://www.scca.com/events.aspx?hub=10

Fastrack news official SCCA member notification

EFFECTIVE FIRST DAY OF THE COVER MONTH UNLESS OTHERWISE NOTED April 2008

BOARD OF DIRECTORS MINUTES

BOARD OF DIRECTORS' MINUTES | SPORTS CAR CLUB OF AMERICA, INC. | *March 3, 2008*

The Board of Directors, Sports Car Club of America, Inc. met via teleconference March 3, 2008. The following members participated: , R. J. Gordy, Chairman, Howard Allen, Jim Christian, Philip Creighton, Larry Dent, Bob Introne, Bob Lybarger, Lisa Noble, Andy Porterfield, John Sheridan, Mike Sauce, K.P. Jones and Jerry Wannarka. Jim Julow, President, also participated.

MOTION: To approve the minutes of the February 7, 2008 meeting. (Porterfield/Sauce) PASSED, Unanimous

PRESIDENTS REPORT

Jim reported that, in the first couple of months, new membership appears to be increasing. He also reported on feedback from the National Convention. He indicated that the 2009 and 2010 National Conventions will be at the South Point Resort and Casino in Las Vegas Nevada. Mr. Julow shared that Club finances were on track with projections, and a detailed report will be available to the Board prior to its next meeting.

OLD BUSINESS

Mr. Wannarka provided an update to the Board on progress to date of the National Racing Task Force.
Several conference calls have already been held, and a two day face to face offsite meeting is scheduled for mid-March for the purpose of consolidating ideas.

The board discussed recently received correspondence regarding Production class roll cages, no action was taken.

The Board recognizes that there is confusion regarding the eligibility of Formula B and the Prepared classes to participate in the 2008 Runoffs. It is the position of the Board that Formula B and the Prepared classes are not eligible, having not met the participation requirements in 2007. Only the 24 classes previously announced and GT3 will be invited to participate in the 2008 Runoffs.

NEW BUSINESS

MOTION: To table the recommendation to specify cam timing on Zetec engines in Formula Continental until the April meeting. (Christian/Wannarka) PASSED, Unanimous

MOTION: To reject the CRB recommendation to allow the use of the Elan intake manifold package with EPP restrictor sized at 1.255 inches in Formula Continental. (Dent/Creighton) PASSED, UNANIMOUS

MOTION: To approve the Time Trials Administrative Council Rules for 2008 as described in the following. (Noble/Lybarger) PASSED, Unanimous

Split the rules into four books targeted to the specific events.
These additional changes are made, beyond removing sections that do not apply to a specific level:

In Level I Section 9.1 change "performed" to "overseen" and "scrutineer" to "TT tech inspector". In Section 9.1.1 change "racing season" to "event".

Add requirements that all participants must be SCCA members. Remove language referring to temporary memberships on the basis that any national programs for temp or weekend memberships qualify the person as a member.

Remove allowance to time cars at PDX events. The safety of PDX is tied to the non-competition focus. Currently no events are timing cars and the TTAC and TTSC feels removing the current option to allow timing is important to safety of the events.

Add clarification that diesel fuels are allowed at TT events.

CONTENTS

BOARD OF DIRECTORS	**1**
Board of Directors Minutes	1
CLUB RACING	**3**
CRB Minutes	3
Technical Bulletin	6
COURT OF APPEALS	**NONE**
SOLO	**8**
SEB Minutes	8
RALLY	**11**
RallyCross Board Minutes	11
RoadRally Board Minutes	None
QUICK LINKS	**12**

Remove requirement for identical passenger seat when replacing the drivers seat in level 3 and 4 events. These level events do not use in car instruction and requiring the upgrade to both seats is a significant cost with no benefit.

MOTION: To approve the following change to the 2008 National Solo Rules effective on publication. (Noble/Introne) PASSED, Unanimous

Section 13.10.E of the 2008 National Solo Rules
Any part of the exhaust system beyond (downstream from) the header/manifold or catalytic converter, if so equipped, may be substituted provided the system meets the requirements of 3.5. Stainless steel heat exchangers are permitted only if the physical dimensions and configuration remain unchanged. Modifications of any type, including additions to or removal of, the catalytic converters, thermal reactors, or any other pollution control devices in the exhaust system are not allowed and the system must be operable. Replacement catalytic converters must be OE if the vehicle has not exceeded the warranty period as mandated by the EPA. Converters must be of the same type and size and used in the same location as the original equipment converter(s). This does not allow for a high performance unit. If the vehicle has exceeded the warranty period, replacement catalytic converters must be OE-type as per Section 13.

MOTION: To approve Glenn Duensing as the new Divisional Events Solo Steward for SoPac Division. (Noble/Sauce) Passed, Unanimous

MOTION: To adjourn. (Porterfield/Lybarger)

Respectfully submitted,

Jim Christian
Secretary

CLUB RACING BOARD MINUTES

CLUB RACING BOARD MINUTES | *March 4, 2008*

The Club Racing Board met by teleconference on March 4, 2008. Participating were Bob Dowie, Chairman; Chris Albin, Stan Clayton, Dave Gomberg, Peter Keane, and Russ McHugh. Also participating were Jim Christian and Jerry Wannarka, BoD Liaisons; Terry Ozment, Vice President of Club Racing; Eric Prill, Vice President of Marketing, Communications, Jeremy Thoennes, Technical Services Manager; John Bauer, Technical Assistant Club Racing; and Lauri Burkons, CRB Secretary.

In addition to those items covered in Technical Bulletin 08-04, the following decisions were made:

PROPOSED RULE CHANGES OR CAR RECLASSIFICATIONS

The following subjects will be referred to the Board of Directors for approval. Address all comments, both for and against, to the Club Racing Board. Comments may be e-mailed to crb@scca.com.

GCR

Item 1. Amend item 1 published in the February FasTrack to read as follows:

Effective 11/1/08: Change section 5.10.3.B.4 as follows:

The driver information shall include: driver's full name, hometown, state, region of record, car number, *and* car make and model~~, and car year as required per GCR~~. It is required that the competition license number be included in the driver information.

Item 2. Effective 11/1/08, change section 9.3.41 to read as follows:

Steering wheel lock devices shall be removed *or disabled* (except Showroom Stock and Touring).

Delete section 9.1.3.D.10.a in its entirety and reletter subsequent sections:

~~Steering lock mechanisms shall be removed.~~

Delete the last sentence of section 9.1.4.L.14 as follows:

~~Steering lock mechanism must be removed.~~

Change section 9.1.6.D.9.b to read as follows:

~~Steering lock mechanisms and a~~ *A*irbags / passive restraint systems shall be removed.

Change section 9.1.7.D.9 to read as follows:

Steering lock mechanisms may be removed *or disabled.*

Delete section 9.1.8.C.9.a in its entirety and reletter subsequent sections:

~~Steering lock mechanisms shall be removed. See GCR section 9.3.41.~~

Change section 9.1.10.D.10.a to read as follows:

Steering column locks may be removed *or disabled.*

Formula

Item 1. Clarify item 7 published in the March FasTrack to note that Formula First is being proposed as a regional-only class.

Item 2. (FE) – Effective 1/1/09, change the name of Formula SCCA (FE) to Formula Enterprises (FE).

Item 3. (CSR) – Effective 1/1/09, change the name of Sports Racer SCCA to Enterprises Sports Racer.

Improved Touring

Item 1. Effective 1/1/09: Reclassify the Stratus to ITB at 2,870 lbs

RECOMMENDATIONS TO THE BoD

None

MEMBER ADVISORIES

Showroom Stock – Based on the publishing and approval dates of the SS suspension package changes, we extended our target date beyond March 1st for requests to allow members to submit requests.

NEW CAR CLASSIFICATIONS

ITB – 99-03 Volkswagen Golf

EP – 04-08 Mazda RX-8 with level 2 preparation

EP – 06-08 Pontiac Solstice with level 2 preparation

EP – 07-08 Saturn Sky with level 2 preparation

REFERRED or TABLED

Formula/Sports Racing

1. FA/CSR – Allow the 13B peripheral port (Drummond). Tabled for further research.
2. FC – Increase the restrictor plate size for the Zetec engine (Weitzenhof). Tabled for further discussion.
3. FC – Align the rules with FB with regard to suspension components and airfoils (Mercurio). Tabled for further research.
4. FF – Reduce the weight of the pistons in the original engine (Smith). Tabled for further research.

Improved Touring

1. IT – Classify the 1994-97 Honda Accord EX (Lucas). Tabled for further committee discussion.
2. ITA – Classify the 2001-02 Neon ACR/non-ACR (3 letters). Tabled for further review.
3. ITB – Reduce the weight of the Porsche 924 (Scott). Table for further committee discussion.

Touring/Showroom Stock

1. T2 - Allow alternate rear sway bars and front/rear springs on the Acura TL Type S (Niffenegger). Tabled for receipt of parts.
2. T3 – Allow the MazdaSpeed Miata an accusump (Hahn). Tabled for identification of parts and specifications.
3. SSB – Allow a suspension package for the Camaro (3 letters). Tabled for further research.

NOT RECOMMENDED

Formula/Sports Racing

1. FB – Freeze the engines with the 07 model year (Hill). We will continue to monitor the engine performance and adjust as needed.
2. FB – Specify that only production motorcycle engines are allows (Hill). This is unnecessary as other controls are available.
3. FC – Handicap the aluminum head (Weitzenhof). The Zetec is already handicapped by 25 lbs.
4. FC - Require sealed Zetec engines, and restrict who can build them (Weitzenhof). FC is not a spec class.

Improved Touring

1. IT – Allow alternate fuel injectors (Ellis-Brown). IT requires stock injectors.
2. IT – Allow ballast in place of the spare tire (Greene). The rule is adequate as written.
3. ITB – Allow alternate gear ratios for the Jetta (Ellis-Brown). No data presented to support the request.
4. ITS – Review the weight of the 1972 Porsche 911E (Allard). The car is classed appropriately.

Production

1. P – Allow hub/bearing carrier modification for level 2 (Heinritz). The rule is adequate as written. We will continue to monitor the situation.
2. FP – Help the Opel (Alderson). The car is classified adequately.
3. HP – Slow the cars that were just moved down from GP (Aldred). We wish to monitor the performance of each car.
4. HP – Removed the weight from the 1098 Spridgets and the rest of HP (David). The weights are appropriate as specified.
5. HP – Measure valve lift as raced for the 510 (Brooks). The specifications are appropriate for the level of preparation.

Touring/Showroom Stock

1. T2 – Allow the Acura TL Type S cat delete pipe (Niffenegger). Removing the catalytic converter is contrary to class philosophy.
2. T2 – Reclassify the Lotus Exige and Elise (Hahn/Van Rossum). The car is classed appropriately with reduced weight (see 03/08 FasTrack).
3. T3 – Reduce the weight of the S2000 (Ference). We have made changes and wish to monitor the results.
4. T3 – Reconsider changes made to the Cobalt and Ion (Wheeler). The specifications are appropriate.
5. SS – Allow ballast in place of the spare tire (Greene). Weight in the tire well is prohibited in all SS-based classes.

Previously Addressed

Addressed in Technical Bulletin 08-03 or the March 2008 FasTrack:

1. FV – Define the emulsion tube holder as a jet (Harding).
2. FV – Do not allow machining to the emulsion tube holder (15 letters).
3. FV – More info for my carb request (Lepetich).
4. DSR – Raise the minimum weight to 1,000 lbs (Messenger).
5. IT – Clarify the intent section of the rules (Amy).
6. P – Allow girdles in the rewrite (Cipher).
7. EP – Clarify the rewrite rules relative to the Caterham (3 letters)
8. T3 – Allow the S2000 an even larger tire (Ference).
9. SSB – Support for allowing the Honda Civic a suspension package (Jocelyn).

No Action Required

GCR

1. Opposition to removing corner station equipment lists (Deane) Thank you for your input.
2. Prohibit tire warmers (Zekert). Thank you for your input. The rule prohibiting tire warmers on the pre-grid is adequate.
3. Runoffs input (Whitney). Thank you for your input.

Formula/Sports Racer

1. FB – Support for manual chain tensioners (Hill). Thank you for your input.
2. FC – Support for restricting Zetec parts suppliers/builders (20 letters). Thank you for your input.
3. FC – Implement more testing prior to approving alternate engine parts (D'Addario). Thank you for your input.
4. FF – Opposition to exhaust height changes (Pare). Thank you for your input.
5. FS – Support for Formula First (Staveley). Thank you for your input.
6. FS – Opposition to Formula First (Davis/Clark). Thank you for your input.
7. FV – Support for removing front suspension horns (Fultz/Brookshire). Thank you for your input.
8. FV – Opposition to removing front suspension horns (5 letters). Thank you for your input.
9. F500 – Happy with 1 in. and do not want 3 in. (Jorgenson). Thank you for your input.

Improved Touring

1. IT – Support for VIN rule elimination (3 letters). Thank you for your input.

2. ITR – Support for V8s (Kummer/Lawton). Thank you for your input.

Production

P – SCCA is no longer fun (Barrack/Lavine). Thank you for your input.

Touring/Showroom Stock

1. T – Support for allowing open tops (Ostendorff). Thank you for your input.
2. T – Opposition to turbo inlet restrictors (Ostendorff). Thank you for your input.
3. T2 – You should fix the mess you caused by including turbo cars (Hermes). Thank you for your input.
4. T3 – Separate the S2000 spec lines and add the CR model to the 04-07 classification (Niffenegger). The CR suspension package was added to the spec line for the earlier model.

Spec Miata

Support for a spec tire (Stiles/Specht). Thank you for your input.

Resumes

David Ellis-Brown – Thank you for your resume. We will keep it on file.

CLUB RACING TECHNICAL BULLETIN

DATE: March 4, 2008
NUMBER: TB 08-04
FROM: Club Racing Board
TO: Competitors, Stewards, and Scrutineers
SUBJECT: Errors, and Omissions, Competition Adjustments, Clarifications, and Classifications.

All changes are effective 4/1/08 unless otherwise noted.

Formula

FA

1. Section 9.1.1.A.2.b, FA engine table, p. 179, line W, Volkswagen 1835cc, correct the specs by adding to the Notes as follows: Notes: Alt block and crankshaft permitted with max. displacement of 2135cc, valve lift (measured at zero lash): .500" max.
2. Section 9.1.1.A.2.b, FA engine table, p. 179, line X, Volkswagen 1600cc, correct the specs by deleting the Notes in their entirety: ~~Alt block and crankshaft permitted with max. displacement of 2135cc, valve lift (measured at zero lash): .500" max.~~

Grand Touring

GT2

1. Engines – NISSAN, p. 289, correct the 2754cc engine specs to read as follows: Engine Family: VG30.
2. Engines – NISSAN, p. 289, correct the 2899cc engine specs to read as follows: Engine Family: L28.

GT3

1. Cars – BMW, p. 298, correct the E36 spec line to read: E46.

Improved Touring

ITA

1. Dodge Stratus (95-00), p. 353, correct the specs to read as follows: Engine Type: 4 Cyl SOHC.

ITB

1. Classify the Volkswagen Golf in ITB.
   Add new spec line to ITCS, p. 367, Volkswagen Golf 2.0 (99-03), Engine Type: 4 Cyl DOHC, Bore x Stroke(mm) / Displ.(cc): 82.5 x 92.8 / 1984, Valves IN & EX(mm): (I)39.5 (E)32.9, Comp. Ratio: 10.0, Wheelbase(in): 98.9, Wheel Dia (inch): 15, Gear Ratios: 3.78, 2.12, 1.36, 1.03, 0.84, Brakes Std.(mm): (F)280 Disc (R)232 Solid Disc, Weight(lbs): 2350.

Production

1. Change the sixth sentence of section 9.1.5.E.1. b.4, p. 395, to read as follows: The stock type of fuel injection must be maintained (electronic, mechanical, ~~electro-mechanical~~ *Bosch CIS, etc.*).
2. Change the eleventh sentence of section 9.1.5.E.2.b.4, p. 401, to read as follows: The stock type of fuel injection must be maintained (electronic, mechanical, ~~electro-mechanical~~ *Bosch CIS, etc.*).

EP

1. Ford Mustang 2.3 (79-93), p. 420-421, correct the specs to read as follows: Prep. Level: 2.
2. Mazda MX-5 / Miata 1.8L (90-97), p. 422-423, correct the fifth sentence of the Notes to read as follows: Level 1 dry sump, connecting rods, intake manifold porting, crankshaft, rocker arms, and cam followers permitted.

3. Classify the Mazda RX-8 in EP with Level 2 preparation.
   Add new spec line to PCS-B, p. 424-425, Mazda RX-8 (04-08), Prep. Level: 2, Weight(lbs): 2450 *2511 **2573, Engine Type: Rotary – Renesis, Displ.(cc): 2701, Carb. No. & Type: Fuel Injection, Wheelbase(in): 106.4, Track (F/R)(in): 63.2 / 63.6, Wheels(max): 18 x 8, Trans. Speeds: 6, Brakes Std.(mm): (F)323 Vented Disc (R)303 Vented Disc.
4. Classify the Pontiac Solstice in EP with Level 2 preparation.
   Add new spec line to PCS-B, p. 426-427, Pontiac Solstice (06-08), Prep. Level: 2, Weight(lbs): 2620 *2686 **2751, Engine Type: 4 Cyl DOHC, Bore x Stroke(mm): 88.0 x 98.0, Displ.(cc): 2384, Block Mat'l: Alum, Head Mat'l: Alum, Valves IN & EX(mm): (I)35.25 (E)30.25, Carb. No. & Type: Fuel Injection, Wheelbase(in): 95.1, Track (F/R)(in): 65.1 / 65.8, Wheels(max): 18 x 8, Trans. Speeds: 5, Brakes Std.(mm): (F)296 Vented Disc (R)278 Solid Disc, Notes: Comp. Ratio limited to 12.0:1, Valve lift limited to .500".
5. Classify the Saturn Sky in EP with Level 2 preparation.
   Add new spec line to PCS-B, p. 428-429, Saturn Sky (07-08), Prep. Level: 2, Weight(lbs): 2620 *2686 **2751, Engine Type: 4 Cyl DOHC, Bore x Stroke(mm): 88.0 x 98.0, Displ.(cc): 2384, Block Mat'l: Alum, Head Mat'l: Alum, Valves IN & EX(mm): (I)35.25 (E)30.25, Carb. No. & Type: Fuel Injection, Wheelbase(in): 95.1, Track (F/R)(in): 65.1 / 65.8, Wheels(max): 18 x 8, Trans. Speeds: 5, Brakes Std.(mm): (F)296 Vented Disc (R)278 Solid Disc, Notes: Comp. Ratio limited to 12.0:1, Valve lift limited to .500".

HP

1. BMW 1600 (68-71), classified in TB 08-01, change the specs to read as follows: Weight(lbs): 2000 *2050 **2100, Track (F/R)(in): 56.5 / 56.5.
2. Toyota Corolla (71-74), classified in TB 08-01, change the specs to read as follows: Notes: Comp. Ratio limited to 12.0:1, Valve lift limited to .450". (2) auto type side drafts w/ 30mm choke(s) allowed at 2050 (*2101 **2153)

Showroom Stock

SSB

1. Chevrolet Camaro V-6 (96-02), p. 491, add to the specs as follows: Notes: Z-28 rear sway bar – 19mm allowed.
2. Pontiac Firebird V-6 (96-02), p. 492, add to the specs as follows: Notes: Z-28 rear sway bar – 19mm allowed.
3. Toyota Celica GTS (00-05), p. 493, add to the specs as follows: Notes: TRD limited slip #41301-ST804 permitted.

SSC

1. Chrysler Neon ACR SOHC (4 door) (01-02), p. 494, change the specs to read as follows: Weight(lbs): 2650.

American Sedan

1. Classify the Chevrolet Camaro / Pontiac Firebird (96-02) in AS.
   Add new spec line to ASCS, p. 482, Chevrolet Camaro / Pontiac Firebird (96-02), Wheelbase(in): 101.1, Gear Ratios (Std.): 2.66, 1.78, 1.30, 1.00, 0.74, 0.50, Brakes(Max)(in): 12.2 x 1.25 Disc, Weight(lbs): 3680, Notes: Cars may be prepared to ASCS except that engines and transmission/final drive shall comply with TCS sections 9.1.10.D, 9.1.10.D.1, and 9.1.10.D.4. Brakes, wheels and tires shall comply with TCS specifications (as a package), or shall comply with ASCS rules (as a package).
2. Classify the Ford Mustang Cobra (96-02) in AS.
   Add new spec line to ACSC, p. 482, Ford Mustang Cobra (96-02), Wheelbase(in): 101.3, Gear Ratios (Std.): 3.37, 1.99, 1.33, 1.00, 0.67, Brakes(Max)(in): 12.2 x 1/25 Disc, Weight(lbs): 3480, Notes: Cars may be prepared to ASCS except that engines and transmission/final drive shall comply with TCS sections 9.1.10.D, 9.1.10.D.1, and 9.1.10.D.4. Brakes, wheels and tires shall comply with TCS specifications (as a package), or shall comply with ASCS rules (as a package).
3. Classify the Pontiac GTO in AS.
   Add new spec line to ASCS, p. 482, Pontiac GTO (04-06), Wheelbase: 109.8, Gear Ratios (Std.): 2.97, 2.07, 1.43, 1.00, 0.84, 0.57, Brakes(Max)(in): 12.2 x 1.25 Disc, Weight(lbs): 3680, Notes: Cars may be prepared to ASCS except that engines and transmission/final drive shall comply with TCS sections 9.1.10.D, 9.1.10.D.1, and 9.1.10.D.4. Brakes, wheels and tires shall comply with TCS specifications (as a package), or shall comply with ASCS rules (as a package).

Touring

T2

1. Mitsubishi Lancer Evo 8/9/RS/GSR/MR (03-06), p. 581, add to the specs as follows: Notes: AMS front and rear springs part #AMS-SCCA01 permitted.

T3

1. Honda S2000 (00-07), p. 583, correct the specs to read as follows: Tire Size: 275/40 (R) max.
2. Volkswagen GTI, classified in TB 08-01, add to the specs as follows: Weight(lbs): non-DSG trans @ 3210, Gear Ratios: 3.36, 2.09, 1.47, 1.10, 1.11, 0.93, Final Drive: 4.0 – 3.09.

ST

1. Lotus Sport Exige Cup 255 (2007), classified in TB 08-01, correct the specs to read as follows: Wheel Size(in): (F)16 x 7 (R)17 x 8.

SOLO EVENTS BOARD MINUTES

SEB MINUTES | *Feb. 27, 2008*

The Solo Events Board met by conference call February 27th. Attending were SEB members Rick Myers, Dave Whitworth, Chris Dorsey, Tina Reeves, Jason Isley, Donnie Barnes, Steve Wynveen, Erik Strelnieks, and Ron Bauer; Lisa Noble of the BOD, and Doug Gill of the National Staff. These minutes are presented in topical order rather than the order discussed.

Unless noted otherwise the effective date for all rule, class, and listing change proposals herein is 1/1/2009.

GENERAL

- As previously published, the SSC has proposed that effective 1/1/09, retaining a Solo Safety Steward's license will require the licensee to attend a refresher SSS training course every three years. Member feedback is invited regarding this proposal.
- Regions and members are reminded that as of 1/1/2008 all entrants in SCCA-sanctioned Solo events must be SCCA members.
- The SEB has approved, and the BOD has concurred with, the appointment of Glenn Deunsing as the Southern Pacific Divisional Solo Events Steward.
- The Site Acquisition Committee has changed its name to the Solo Site Advisory Committee, to better reflect its activities and mission. Steven Kohn has been appointed to this committee.
- SEB positions from the following Divisions will be open at the end of 2008: Southern Pacific, Rocky Mountain, and Northern Pacific. Interested members are invited to submit their qualifications in writing to the BOD and SEB, via the National Office.
- There are immediate openings for Divisional Solo Events Stewards in the Northeast and Central Divisions. Interested members are invited to submit their qualifications in writing to the SEB via the National Office.
- The following rule change proposal is published for member comment: Change 6.11 to read: "Pre-heating of tires is prohibited in the grid from the time the course is closed for walking or competition in the previous heat ends - whichever is later. Heated tire covers may not be used at any time."
- Because class A Modified is the highest level of preparation defined within the Solo ruleset, the SEB has determined that it is exempt from the minimum participation requirements of 4.9.

SOLO NATIONALS

- The SEB has concurred with a recommendation to check seat weights and attachment methods at National events for applicable categories such as ST, SP, SM.

STOCK

- Brian Conners has been approved as Chairman of the SAC.
- The SEB has recommended, and the BOD has approved, the rescinding effective immediately upon publication of a 2008 rule change covering catalytic converts in Stock. The effect of the removal of this change is that the first two paragraphs of 13.10.E now read as follows:

  "Any part of the exhaust system beyond (downstream from) the header/manifold or catalytic converter, if so equipped, may be substituted provided the system meets the requirements of 3.5. Stainless steel heat exchangers are permitted only if the physical dimensions and configuration remain unchanged.

  Modifications of any type, including additions to or removal of, the catalytic converters, thermal reactors, or any other pollution control devices in the exhaust system are not allowed and the system must be operable. Replacement catalytic converters must be OE if the vehicle has not exceeded the warranty period as mandated by the EPA. Converters must be of the same type and size and used in the same location as the original equipment converter(s). This does not allow for a high performance unit. If the vehicle has exceeded the warranty period, replacement catalytic converters must be OE-type as per Section 13."

NOTE: This was done per SAC recommendation, based upon new information which has been provided regarding the availability of replacement OE catalytic converters for vehicles more than a few years old.

STREET TOURING

- Mike Simanyi has been approved as Chairman of the STAC, and Chris Shenefeld has been appointed as a new member of this committee.
- The following rule change proposal has been recommended by the STAC and is being published for member comment:
  - In 14.13, change the maximum tire size for 2WD vehicles (FWD and RWD) to 285 (ref. 07-438)

STREET PREPARED

- The following listing change proposals have been recommended by the SPAC and are being published for member comment:

- Change the Ford Escort-related listings in FSP to read as follows (ref. 07-428):

  Escort GT, Escort and Tracer ('91-'96)
  Escort, Tracer & ZX2 ('97-'02)
  EXP & LN& & Escort and Lynx ('81-'90)

- Move from CSP to DSP, on a separate line: Dodge Neon SRT-4 (ref. 08-014)

- The following rule change proposals have been recommended by the SPAC and are published for member comment:
  - Change 15.10.J to read:

    "15.10.J Engine mounts may be replaced, but must attach in the factory location(s) without additional modification or changes. Engine position may not be changed.

    Hydraulic shock type rear engine locators, or bobble struts may be replaced by manufacturer's performance part, or aftermarket replacement part. This part must retain factory dimensions and attachment points, including factory design. (Example: If factory locator/bobble strut is gas or hydraulic piston type, replacement part must be gas or hydraulic piston type.)"

  - Add new section after 15.10.G (and renumber subsequent sections accordingly) which reads:

    H. Camber kits, also known as camber compensators, may be installed. These kits consist of either adjustable length arms or arm mounts that provide a lateral adjustment to the effective length of a control arm. Alignment outside the factory specifications is allowed. The following restrictions apply:

    1. On double/unequal arm (e.g. wishbone, multi-link) suspensions, only the upper arms OR lower arms may be modified or replaced, but not both. Non-integral longitudinal arms that primarily control fore/aft wheel movement (e.g. trailing arm(s) or link(s) of a multi-link suspension) may not be replaced, changed, or modified.

    2. On arm-and-strut (MacPherson/Chapman) suspensions, the lower arms may be modified/replaced OR other methods of camber adjustment as allowed by paragraphs 14.8.B, C, or G may be used, but not both.

    3. On swing or trailing arm suspensions, the main arms may not be modified or replaced, but lateral locating links/arms may be modified or replaced.

    4. The replacement arms or mounts must attach to the original standard mounting points. All bushings must meet the requirements of 14.8.B. Intermediate mounting points (e.g. shock/spring mounts) may not be moved or relocated on the arm, except as incidental to the camber adjustment. The knuckle/bearing housing/spindle assembly cannot be modified or replaced.

    Note: Many modern suspension designs known by other names, actually function as double A-arm designs. These include the rear suspensions on 88+ Honda Civic/Integra, Neon, E36 BMW, and most 'multi-link' and are covered by 14.8.I.1."

STREET MODIFIED

- The following rule change proposal has been recommended by the SMAC and is published for member comment:
  - Add new 16.1.I as follows (and renumber subsequent sections accordingly):

    "Non-metallic inner fenders may be modified for tire clearance. This allowance does not allow for additional vertical clearancing inboard of the hub face. Competitors are reminded that suspension attachment points on the chassis may not be moved."

MODIFIED

- Tommy Saunders has stepped down from the MAC, and is thanked by the SEB for his service to the Club as a member of this committee.

REFERRED TO COMMITTEE FOR FOLLOWUP

- ALL: Consolidation of wing area measurement method definition (12.9)
- STAC: Brake kit wording, consolidation with SP wording.

NOT RECOMMENDED

- Street Prepared:
  - Move X-1/9 to FSP (08-044)

TECH BULLETINS

1. Street Prepared: The following new listings, effective immediately upon publication, have been recommended by the SPAC and approved by the SEB:

   - BMW 335, 328 ('06+) BSP
   - BMW 135, 128 ('08+) BSP

2. Street Prepared, Errors & Omissions: the following references in the Solo Rules should be corrected: 15.10.J reads "if one or more non-OE engine mounts are used, 15.10.J does not apply…" Change to: "if one or more non-OE engine mounts are used, **15.10.K** does not apply…" 15.10.K reads "If a torque suppression device is used, 15.10.I does not apply and replacement engine mounts may not be used." Change to: "If a torque suppression device is used, **15.10.J** does not apply and replacement engine mounts may not be used."

RALLYCROSS BOARD MINUTES

RXB MINUTES | *Feb. 10, 2008*

In attendance: John Barnett, Mark Utecht, Mark Walker, Jayson Woodruff and Tom Nelson

January minutes mentioned.

Review 2008 RXB Officers/Areas of responsibility

Secretary – Jayson W
Safety Committee Head – Tom N.
(Contacting Ken Cashion for participation in RallyX Safety Committee
Rules – Mark Utecht
Div Stewards Liaison – Tom Nelson
New Programs (New Region Development) – John Barnett
Chair – Mark Walker

Safety Report

No significant update or issues

Rules Review

General:
Issues to be addressed by RXB and Rules committee:
No obvious restriction on NOS.
No Rule to disallow chain steering wheel
Crossover classing from Solo (ST, SP) and Club Racing (IT and spec miata)
Battery rule changes considered for immediate implementation due to member response (convention included) on critical need.

Stock:
Motion by Mark U, Jay W second:
Clarification – Add paragraph 6.2.C.14 (paraphrase) Alternate batteries must be of same type and group size. Pass 4-0

Prepared:
Relocation and alternate battery allowances will be considered for changes to the 2009 rule set. Note the stock clarification of paragraph 6.2.C.14 carries over to Prepared class.

Mod:
Issues to be addressed by RXB and Rules committee:
Engines: no obvious allowance for added forced induction.
Motion by Mark U, ? second:
Rule Change – Add paragraph 6.2.C.17 (paraphrased) Batteries may be relocated and/or substituted with any type. Pass 5-0
Note, issue of 'immediate rule change' brought to the BOD. BOD was under unanimous opinion that this is essentially an omission to the spirit of the mod class and immediate implementation is appropriate.
Also note, existing battery placement and mounting requirements in section 6.3.N.

New Regional Programs

No significant update or issues

Zbigniew (Z.B.) Lorenc approved by BOD as Great Lakes Divisional RX Steward.

Old Business – None

New Business

Solo Performance Specialties (SPS) has tentatively committed to being the title sponsor of the MidDiv divisional series.

Some talk of tentative large national level sponsor. Details to be established and advertised at a later time.

Howard D. entered the meeting. '08 contingencies re-capped. Volkswagen, Subaru and Team Dynamics renew their programs administered through the SCCA. Hankook continues contingency program off site.

QUICK LINKS

The following items have been removed from regular inclusion in FasTrack News and can be found on SCCA's Web site at the following links:

CLUB RACING

Accredited Driver Licensing Schools: http://www.scca.com/contentpage.aspx?content=39

Forms: http://www.scca.com/contentpage.aspx?content=45

Technical Forms: http://www.scca.com/contentpage.aspx?content=74

Scrutineer's Forms: http://www.scca.com/contentpage.aspx?content=77

Vehicle Homologation Forms: http://www.scca.com/contentpage.aspx?content=79

General Competition Rules (GCR): http://www.scca.com/contentpage.aspx?content=44

SOLO

Forms: http://www.scca.com/contentpage.aspx?content=60

Rulebook: http://www.scca.com/contentpage.aspx?content=61

RALLY

Forms: http://www.scca.com/contentpage.aspx?content=49

Rulebook: http://www.scca.com/contentpage.aspx?content=50

SCCA NATIONAL CONVENTION

Event page: http://www.scca.com/event.aspx?hub=6&event=11083

EVENT CALENDAR: http://www.scca.com/events.aspx?hub=10

Fastrack news official SCCA member notification

EFFECTIVE FIRST DAY OF THE COVER MONTH UNLESS OTHERWISE NOTED May 2008

BOARD OF DIRECTORS MINUTES

BOARD OF DIRECTORS' MINUTES | SPORTS CAR CLUB OF AMERICA, INC. | *April 7, 2008*

The Board of Directors, Sports Car Club of America, Inc. met via teleconference April 7, 2008. The following members participated: R. J. Gordy, Chairman, Howard Allen, Jim Christian, Philip Creighton, Larry Dent, Bob Introne, Bob Lybarger, Lisa Noble, John Sheridan, Mike Sauce, K.P. Jones and Jerry Wannarka. Jim Julow, President, Jeff Dahnert, Vice President of Finance, and Terry Ozment, Vice President of Club Racing, also participated.

MOTION: To approve the minutes of the March 3, 2008 meeting. (Lybarger/Dent) PASSED, Unanimous

PRESIDENTS REPORT

Jim reviewed the draft agenda for the May BOD meeting in Topeka. He presented an update on the Runoffs track selection process. He reported that membership has increased slightly.

TREASURERS REPORT

Jeff Dahnert reported that through February 2008 we were slightly behind budget.

OLD BUSINESS

NONE

NEW BUSINESS

A task force consisting of Jones (Chairman) Creighton and Dent, was formed to review the Club Racing Rules making process.

MOTION: To waive the provisions of GCR Section 3.9.1.F to allow Tyler Dahl to change his Region of record, from SOPAC to RMDIV. (Christian/Allen) PASSED Unanimous

MOTION: To offer lifetime memberships to all past and future Hall of Fame inductees. (Sheridan/Noble) PASSED Unanimous

MOTION: To allow Scott Tucker and Ed Zabinski to count two national finishes in ST as finishes in T1 for purposes of qualifying for the 2008 Runoffs. (Creighton/Jones) FAILED Unanimous

MOTION: To approve the following changes to the GCR, effective immediately, as recommended by the Club Racing Board. (Christian /Wannarka)

1. Replace 8.1.4 with:

8.1.4. Rules Interpretation

To obtain a determination on the legality of a vehicle or component without filing a formal protest, a ~~competitor~~ *member* may request such a ruling from the Club Racing Office. The Chairman of the Stewards program will then convene a first court. The protest and appeal procedures described in sections 8.3 and 8.4 apply, except that penalties or penalty points will not be assessed in the event of a negative ruling.

Each court (First and Court of Appeals, as applicable)) will consult the Club Racing Board for expert technical testimony. After receiving the decision of the first court, the member may do one of the following:

- *Request court of appeals review, and provide additional evidence to the court of appeals, if desired.*
- *Withdraw a request for court of appeals review, if previously made*

CONTENTS

BOARD OF DIRECTORS	**1**
Board of Directors Minutes	1
CLUB RACING	**4**
CRB Minutes	4
Technical Memorandum	9
Technical Bulletin	10
Runoffs Supplemental Regs	14
Runoffs Officials	19
Runoffs Schedule	21
COURT OF APPEALS	**22**
SOLO	**23**
SEB Minutes	23
Nationals Supplemental Regs	25
RALLY	**30**
RoadRally Board Minutes	30
RallyCross Board Minutes	NONE
QUICK LINKS	**33**

A non-compliant ruling will be published; a compliant ruling will not be published. The fees for this service are as follows:

First Court	$125
Appeals Court	$175.

This change codifies an agreement made at the convention between the COA and the CRB to insure appropriate input by the CRB before the courts make their rulings. It also clarifies who can request a rules interpretation.

2. Replace the last two sentences of 8.4.6 with the following:
Penalties involving time, disqualification, suspension, or loss of points shall be made effective from the date of the conclusion of the event involved. If the Court of Appeals affirms a suspension penalty imposed by the First Court or determines that a suspension penalty should be added, the COA will determine the date on which suspension penalty begins.

This change allows the COA to make suspensions effective at a date that serves justice. The existing language requires that suspensions become effective upon the date of the COA's ruling. This does not always have the desired effect.

3. Add a new item 3 in 7.4.A and renumber the remainder of 7.4.A:
3. Loss of event points 1 point

This change is to remedy the current situation where in 7.2.C there is a penalty listed, but for which there is no enforcement mechanism in 7.4.A.

4. Change section 9.1.1.H.2.E as follows:

Brackets for mounting components, such as the engine, transmission, suspension pickups, instruments, clutch and brake components, and body panels may be ~~nonferrous~~ *ferrous, aluminum alloy, or magnesium alloy* of any shape, and fastened to the frame in any manner.

One of the basic underpinnings of the F1000 (FB) class is that conversions of existing FC chassis were to be encouraged. This change, and the next one, are to permit conversions of chassis with aluminum alloy or magnesium alloy uprights and brackets.

5. Change section 9.1.1.H.9.A as follows:

All suspension components shall be of steel or ferrous material, except that hubs, hub adapters, hub carriers, bell cranks, pivot blocks, bearings and bushings, spring caps, abutment nuts, anti-roll bar links, shock absorber caps, and nuts may be aluminum alloy *or magnesium alloy*.

See 4.

6. Change the last sentence of section 9.1.1.B.4.a as follows:
~~Camshaft timing is unrestricted~~. *Required camshaft timings are as follows:*
Intake centerline 116-117 degrees ATDC

Exhaust centerline 106-107 degrees BTDC

This change is intended to maintain performance equality amongst Zetec engines in FC. To date, the two major builders of these engines have had a gentlemen's agreement not to adjust cam timing, but we now believe this must be codified and put into effect as soon as possible.

MOTION: To approve the following change to the Operations Manual. (Sheridan/Dent) PASSED Unanimous

OPERATIONS MANUAL UPDATES - Re: TRACK REVIEW PROCESS

To reflect the recent decision to discontinue the Track Review Process the following changes need to be made in the Operations Manual. The changes are marked below with the strikethrough over the text to be removed.

1. Remove Section 5.12 in its entirety from the Operations Manual (page 21 of Dec 2007 Operations Manual).

~~5.12 Track Review Process~~

~~The SCCA Track Review process is coordinated by the Executive Stewards, working with the National Staff designee. The program is comprised of three categories as follows:~~

- ~~Existing track and/or configurations will be reviewed annually by the Executive Stewards using a check-list provided by the National Office.~~
- ~~New track and/or configurations will be reviewed by a track reviewer selected from a list approved by the SCCA at the expense of the region and/or track. The reviewer will use a checklist provided by the National Office.~~
- ~~Previously approved/decommissioned track and/or configurations will be addressed on a case by case basis under a. or b. above at the discretion of the National Office.~~

2. Remove verbiage from the third bullet point of Section 5.4.1 (page 17 of Dec 2007 Operations Manual).

5.4.1. Executive Stewards

Appointment: One per Division, selected by the Area Director(s) for each Division, upon advice from the Chairman of the Steward's Program and final acceptance by the Board of Directors at their November meeting. Term to begin January 1 of the following year.

Duties: Those set forth in the SCCA Club Racing General Competition Rules, and responsible to the Chairman of the Stewards Program as follows:

- Maintain close liaison with Chairman of the Stewards Program in the supervision, training and licensing of Stewards within his/her Division, and in the implementation of national level programs.
- Maintain a roster of Senior, National, Divisional, Stewards-In-Training and National Series Chief Stewards in his/her Division.
- Monitor the condition of each racing facility in the Division **and** ~~work with the National Office to coordinate track reviews for the Division~~, ensure that current disaster plans are on file at the National Office for each facility that an event is conducted on.
- Review and pre-approve Supplemental regulations, race schedules, and entry forms for race sanction requests prior to submission to the Club Racing Department.
- Assign all Stewards and approve other key officials for each National, Regional, Driver's School, or Restricted Event held in the Division in accordance with the GCR.
- Delegate any or all duties of the Executive Steward to Deputy Executive Steward(s).
- Serve as advisory resource for Club Racing Board on GCR operational issues.
- Maintain full responsibility for licensing all Stewards in their Division, except National Series Chief Stewards.
- Nominate a sufficient number of National Chief Stewards in their Division to be National Series Chief Stewards. Nominations shall be made no later than October 1 of the year prior to effective date, and shall be made to the Chairman of the Stewards Program.

MOTION: To adjourn. (Allen/Wannarka)

Respectfully submitted,

Jim Christian
Secretary

CLUB RACING BOARD MINUTES

CLUB RACING BOARD MINUTES | *March 4, 2008*

The Club Racing Board met by teleconference on April 1, 2008. Participating were Bob Dowie, Chairman; Chris Albin, Stan Clayton, Dave Gomberg, Peter Keane, and Russ McHugh. Also participating were and Jim Christian, Jerry Wannarka, BoD Liaisons; RJ Gordy, BoD Guest; Terry Ozment, Vice President of Club Racing; Jeremy Thoennes, Technical Services Manager; John Bauer, Technical Assistant Club Racing; and Lauri Burkons, CRB Secretary.

In addition to those items covered in Technical Bulletin 08-05, the following decisions were made:

PROPOSED RULE CHANGES OR CAR RECLASSIFICATIONS

The following subjects will be referred to the Board of Directors for approval. Address all comments, both for and against, to the Club Racing Board. Comments may be e-mailed to crb@scca.com.

GCR

Item 1. Change the first paragraph of item 6 from the March *FasTrack* as follows:

All cars shall be equipped with an accessible sampling port/valve/device located in a fuel line between the fuel tank or fuel cell and the carburetors or fuel injection system *or in an unused carburetor port* to allow safe acquisition of a fuel sample. If possible, the port/valve/device should be located outside the engine compartment. The sampling port/valve/device will be installed and used by the competitor to obtain the sample without fuel leaking, spraying or squirting. Siphoning of fuel directly from the fuel tank or fuel cell or removing a hose or line is not allowed.

Formula/Sports Racer

Item 1. Effective 11/1/08: Change selected portions of section 9.1.1.D.2.e, amended in *Technical Bulletin 08-02*, as follows:

Minimum weight with rings and pin: ~~525~~ *485* grams

Grand Touring

Item 1. Effective 11/1/08: Change section 9.1.2.E.1.a.1 as follows:

~~All cars shall use a single Holley Model 4150 carburetor, restricted to~~ *Any modular 4bl carburetor may be used with a maximum of a* one and eleven-sixteenths (1-11/16) inch throttle bore *and 1-1/2" SAE bolt pattern*, unless alternate carburetion and/or dimensions are specified in the GTCS.

Item 2. Effective 11/1/08: Change section 9.1.2.F.4.b.12 as follows:

A spoiler may be fitted to the font of the car. It shall not protrude beyond the overall outline of the car as viewed from above except *as follows:*

- GT2: ~~where~~ a front splitter may extend up to *three* (*3*) inches.
- *GT3: a front splitter may extend up to two (2) inches.*
- In all classes, the spoiler shall not extend aft of the forward most part of the front fender opening (cutout), and shall not be mounted …

Item 3. Effective 11/1/08: Change section 9.1.2.F.4.b.13 as follows (portions omitted remain unchanged):

A spoiler or a Club Racing specified rear wing for GT2 *and GT3* may be fitted to the rear of the car. Note: O.E.M. rear spoilers and wings are note permitted unless specifically listed on the vehicle's specification form.

If a spoiler is used, it shall be contiguous with the bodywork and shall comply with the following:

(Existing sections 9.1.2.F.4.b.13.a-d)

If a Club Racing specified wing is used (GT2 *and GT3* only), it shall comply with the following:

E. Specifications: Unmodified single element Liebeck airfoil #1LD104E scaled to a chord length of 10.75 inches.

- The maximum cross-sectional tolerance of the wing profile is 0.060 inch.
- *In GT2 only, a* maximum 0.50 inch Gurney tab is allowed at the trailing edge of the wing element. The tab must be mounted 90 degrees to the upper wing surface. No air may pass between the tab and the wing.
- The wing end plates must fit within a rectangle measuring 11.00 inches long by 4.00 inches tall. No portion of the wing element or tab may extend beyond the perimeter of the endplate. The endplates must be mounted parallel to the vehicle centerline, and must be perpendicular to the ground. Endplates must be flat, with no curvature or Gurney tabs.
- *GT2:* The maximum width of the entire wing assembly (wing element, endplates, Gurney tab *(GT2)*, and mounting hard-

ware) is 68.00 inches but no wider than the rear body width including fender flares.

- *GT3: The maximum width of the entire wing assembly (wing element, endplates, and mounting hardware) is 64.00 inches but no wider than a total of 2.00 inches beyond the rear body width including fender flares.*

F. Wing mounting:

- *GT2:* The entire wing assembly must be mounted below the highest point of the roof or roll cage main hoop whichever is higher measured at the highest point.
- *GT3: The entire wing assembly must be mounted at least 4.00 inches below the highest point of the roof or roll cage main hoop whichever is higher measured at the highest point.*
- *GT2 and GT3:* The trailing edge of the wing assembly must be located within an area defined by a point; 6" forward of rearmost bodywork and the rearmost bodywork measured at vehicle centerline.
- Two wing mounting posts must be used, with each one located between 8"-20" inboard from end of wing. The exposed portion of the wing mounting posts shall not exceed 85 square inches each. Curved brackets will be measured as if they're in a flat plane as viewed from the side. Mounting brackets are to be included in measurement.
- The maximum wing angle from horizontal is 30-degrees.

American Sedan

Item 1. Effective 11/1/08: Change section 9.1.6.D.1.g.1 as follows:

Cam timing, timing chains, ~~gears,~~ woodruff keys, dowel pins, and sprockets are unrestricted. Double row chains may be substituted for single row chains. *Timing belts and timing gears are prohibited, unless fitted as original equipment.*

Spec Miata

Item 1. Effective 11/1/08: Change the second paragraph of section 9.1.8.C.7.i as follows:

To improve driver exit through the window area, the driver vent window and ~~vertical~~ vent window supporting *frame* may be removed as a pair. If removed, ducting may be in the passenger side vent window only.

Item 2. Effective 11/1/08: Change section 9.1.8.C.6.d.m as follows:

The front track shall not exceed 1450mm. The rear track shall not exceed 1465mm for the 90-97 model years and 1475mm for the 99-05. ~~Track may be changed to accommodate larger tires, provided that there is safe tire/fender/chassis clearance under all conditions of steer, bump, and rebound.~~ Aftermarket wheel studs, lug nuts, and wheel spacers are permitted. *If spacers are used they shall be no greater than 13mm and equal on all four corners (i.e., no offset stagger side to side).*

RECOMMENDATIONS TO THE BoD

None

MEMBER ADVISORIES

None

NEW CAR CLASSIFICATIONS

ITA – Honda Accord EX (94-97)

EP – Dodge Neon ACR (01-02) with Level 2 prep

EP – Mazda MX-5 (06-08) with Level 2 prep

HP – Fiat X-1/9 1500 with Level 2 engine prep and Level 1 suspension prep

HP – Honda Fit (07-08) with Level 2 prep

T2 – Ford Mustang – add the 2008 model year

REFERRED or TABLED

GCR

1. Increase the wall thickness of cars over 2,700 lbs (Myers). Tabled for further research.

2. Allow a multi-piece main hoop (Dietz). Tabled for further research.
3. What were the reasons for the sound changes (Perrault)? Tabled for further discussion with the Executive Stewards.
4. Allow 1.625” x .083” tubing (Febles). Tabled for further discussion.
5. Novice permit changes (Ruse). Tabled for further discussion.
6. Review cage requirements (Stavely). Tabled for further discussion.

Grand Touring

1. GT – Allow alternate suspension type for rear/mid-engine cars prior to MY 1990 (Sanchez). Tabled for further research.
2. GTL – Allow wings and splitters (3 letters). Tabled for further discussion.

Improved Touring

1. ITA – Classify the 02 Neon ACR (Ochoa). Tabled for further research.
2. ITB – Classify the 99-00 Mazda Protégé (Buck). Tabled for further research.

American Sedan

1. Allow alternate Edelbrock heads and intake (Bailey). Tabled for further research.
2. Classify the T1 Steeda Cobra R (Bodle). Tabled for further discussion.

Touring/Showroom Stock

1. SSB – Allow suspension package for the Camaro (3 letters). Tabled to research spring rates and availability.
2. SSB – Allow alternate sway bars and springs for the Mazda6 (Franco-Trujillo). Tabled for receipt of sway bar parts.
3. SSB – Allow the Spec Miata kit for the 99-05 Miata (Mead). Tabled for further research.
4. SSB – Allow the suspension kit for the Mustang (Gittings). Tabled for receipt of parts.

Spec Miata

1. Allow 94-97 cars 4.3:1 gear ratio and add 25 lbs (Henry). Tabled for further discussion.
2. Allow two clamps on the sway bars (Henry). Tabled for further discussion.

NOT RECOMMENDED

GCR

Require track safety lights (O’Donovan). The requirements differ among the tracks, and the use of lights is already allowed as needed (GCR 6.11.3).

Formula/Sports Racing

FB – Require a safety shield between the engine and driver (Smith). Experience in other motorcycle-engine classes indicates there is no need for such shields.

Grand Touring

1. GT – Allow hood bulge where needed and remove spec line allowances (Patten). The rules are adequate as written.
2. GT1 – Allow the 13B Mazda a turbo (Jung). Forced induction is not allowed.
3. GT1 – Allow alternate wing mount and height with weight reduction (Jung). The rules are adequate as written.
4. GT1 – Allow a weight break for 12” rotors (Jung). The rules are adequate as written.
5. GT1 – Allow two additional hood louvers (Jung). The rules are adequate as written.
6. GT1 – Reduce the weight of the RX-7 13B to 1,720 lbs (Jung). The weight is appropriate.
7. GTL – Add the Honda D15 and D16 blocks (Maloney). We will not consider building mixed architecture engines, such as 3-valve 1600 cc.
8. GTL – Classify the 1.8 L VW SOHC in the Dodge 024 (Coffin). Engines are only classified with bodywork from the same manufacturer or corporation.

Improved Touring

1. IT – Rescind the removal of "for purpose of obtaining any competitive edge" (Ellis-Brown). The rule is adequate as written.
2. ITB – Reclassify the Pinto to ITC (Laird). You request is centered around your desire to change run groups, not with a specific problem in classification of your car. Please contact your local race committees with your issues, as it is outside the scope of the CRB.

Production

1. FP – Rescind the Lotus Seven adjustments (Strittmater). We wish to monitor the performance of the car.
2. FP – Reclassify the Nissan NX 2 K to FP (Pearson). We have made changes to the EP class and wish to monitor the results.

American Sedan

1. Allow alternate transmission gears (Sarvis). The current rules are adequate as written.
2. Allow gear drives (Weaver). This is inconsistent with class philosophy.
3. Allow manual brake system with modified pedal mounting (Miller). This is inconsistent with class philosophy.
4. Add rev limiters to AS engines (James). This is inconsistent with class philosophy.
5. Suggested Mustang weights (Himes). The weights are appropriate as listed.
6. Allow 17" wheels (Walther). This is inconsistent with class philosophy.
7. Allow alternate material windshields (Werth). This is inconsistent with class philosophy.

Touring/Showroom Stock

1. T – Allow an accusump for all cars (Hahn). We will consider the parts on an as-requested basis.
2. T1 – Allow an alternate ABS electronic brake controller (Barrick). We would like further information.
3. T2 – Allow an alternate radiator for Mitsubishi Lancer Evo (Moses). We will consider this when the parts are received.
4. T2 – Add the 08 350Z Nismo to the current spec line (St. Clair). The car is too dissimilar to the currently classified model.
5. T3 – Allow the Cobalt a 245 tire (Childs). The Cobalt is competitive as classified.
6. T/SS – Classify the diesel VW (Mathes). We will consider this upon receipt of the VTS.
7. T/SS – Require drivers to compete at the Runoffs in the car they qualified in (Hahn). The rules are adequate as written.
8. SSB – Allow the suspension package for the Z4 (Dryden). We have made adjustments to the class and wish to monitor the results.
9. SSB – Change the Z4 restrictor to 56 mm (Dryden/Tippens). We have made adjustments to the class and wish to monitor the results.
10. SSB – Allow a limited slip differential and the BMW sports package (Tippens). We have made adjustment to the class and wish to monitor the results.

Spec Miata

1. Allow the standard rebuild procedures (Drago). The rules are adequate as written.
2. Allow superseded parts (Disque). The rule is adequate as written and addressed by the OEM/OEM equivalent rule.
3. Give the 94-95 and 96-97 cars the same restrictors (Henry). The specifications are appropriate.

Previously Addressed

Addressed in Technical Bulletin 08-04 or the April 2008 FasTrack:

GT3 – Fix BMW discrepancies (Valdez).

Addressed in Technical Bulletin 08-03 or the March 2008 FasTrack:

SSB – Help the Mini Cooper S (Cullen).

Addressed in Technical Bulletin 08-02 or the February 2008 FasTrack:

T2 – Allow the SRT-4 a larger tire (Childs).

Addressed in Technical Bulletin 08-01 or the January 2008 FasTrack:

AS – Change the weight of the Mustang to 3,280 lbs (Melley).

No Action Required

GCR

1. Runoffs input (3 letters). Thank you for your input.
2. Fuel input (4 letters). Thank you for your input.
3. Support for new fuel table (8 letters). Thank you for your input.
4. Opposition to new fuel table (3 letters). Thank you for your input.
5. Opposition to "close up" language (Hobbs). Thank you for your input.
6. Rules interpretation request input (Allen). Thank you for your input.

Formula/Sports Racer

1. FC – Support for FC changes (Andersen/Cohn). Thank you for your input.
2. FC – Opposition to FC changes (108 letters). Thank you for your input.
3. FC – Thank you (8 letters). Thank you for your input.
4. FS – Support for Formula First (47 letters). Thank you for your input.
5. FS – Opposition to Formula First (13 letters). Thank you for your input.
6. FV – Opposition to adjustable cam gears (Craft). Thank you for your input.
7. FV – Continued rules adjustment input (Galuardi). Thank you for your input.
8. FV – Support for track measurement cleanup (17 letters). Thank you for your input.
9. FV – Opposition to track measurement cleanup (3 letters). Thank you for your input.
10. FV – Emulsion tube input (4 letters). Thank you for your input.
11. FV – Opposition to removal of droop horns (Maloney). Thank you for your input.

Grand Touring

1. GT1 – Clarify the LS1 engine allowance (Sloma). The stock manifold is the only restriction.
2. GT1 – Reconsider the changes to the ACP bodywork (Canney). Thank you for your input.
3. GTL – Performance data (Dentici). Thank you for your input.
4. GTL – Adjustment consistency input (Patten). Thank you for your input.

American Sedan

1. Allow alternate GM heads, and remove Ford weight increase (Kopp/Schepergerdes). We are continuing our research of alternate heads
2. Opposition to engine rule changes (7 letters). Thank you for your input.
3. The proposed changes are confusing (Post). Thank you for your input.
4. Support for GTO in AS (Brannon). Thank you for your input.
5. Opposition to engine and steering column changes (Warning). Thank you for your input.
6. Support for T2 cars in AS (Kesselman). Thank you for your input.
7. Opposition to T2 cars in AS (James). Thank you for your input.
8. T2 cars input (Bailey/Brannon). Thank you for your input.

9. Upset with direction of AS (Varat). Thank you for your input.

Touring/Showroom Stock

1. T2 – Opposition to EVO springs (Peters). Thank you for your input.
2. SSB – Thank you for helping the Mini (Davis). Thank you for your input.

Spec Miata

1. Clarify the legality of alternate tie rods (Disque). OEM tie rods are allowed.
2. Support for spec track (7 letters). Thank you for your input.
3. Opposition to spec track (Clements). Thank you for your input.
4. The spacer issue needs more research (Zandbergen). Thank you for your input.
5. Spacer input (3 letters). Thank you for your input.
6. Spec tire input (4 letters). Thank you for your input.

Resumes

AS – Jon Davies – Thank you for your resume. We will keep it on file.

AS – Jerry Hartman – Thank you for your resume. We will keep it on file.

CLUB RACING TECHNICAL MEMORANDUM

DATE: April 20, 2008
FROM: Club Racing Technical Services Department
TO: Competitors, Stewards, and Scrutineers
SUBJECT: Spec Miata Compliance Program Update

Following BOD approval for the program in December, the Spec Miata Compliance Program is now in full swing. The team has made its first compliance visit to San Francisco Region for their Double National and plans to travel to an additional 9 -14 events in 2008 based on input from the SM community, Executive Stewards, and the participation levels during the remainder of the season.

The list of desired measurement tools has been created and are in the process of being purchased; starting with an additional whistler, used for measuring compression ratio, which is currently on loan to an SCCA region for its event.

Plans are coming together for the first SM tech inspector training seminar, to be held in Topeka, Kan., in July. This seminar will focus on training at least one tech inspector from each division on the ins and outs of the cars, tools available, and general impound and inspection procedures. Following this on-site seminar, the training materials will be distributed to region tech personnel throughout the country.

This is shaping up to be a great season and with our team traveling to Regional and National events across the country we look forward to meeting you.

CLUB RACING TECHNICAL BULLETIN

DATE: April 1, 2008
NUMBER: TB 08-05
FROM: Club Racing Board
TO: Competitors, Stewards, and Scrutineers
SUBJECT: Errors, and Omissions, Competition Adjustments, Clarifications, and Classifications.

All changes are effective 5/1/08 unless otherwise noted.

GCR

1. Appendix B – Glossary, change the definition of cooling system, p. 114, to read as follows: Cooling System – those components directly associated with the cooling of an engine, including any hoses, fans, *pumps,* radiators, *internal engine passages, galleries, coolant retention components and coolant entry and exit points,* etc.
2. Appendix B – Glossary, add a definition for a lubrication system to read as follows: *Lubrication System – those components directly associated with the lubrication of an engine, including hoses, pumps, heat exchangers, internal engine passages, galleries, lubricant retention components and lubricant entry and exit points, etc.*

Formula

FA

1. Section 9.1.1.A.2.b, FA engine table, p. 178, line I, correct the specs to read as follows: Notes: any BD series iron or alloy cylinder block *and alternate crankshaft* permitted *with a max. displacement of 1615cc.*
2. Section 9.1.1.A.2.b, FA engine table, p. 179, line V, correct the specs to read as follows: Notes: Alternate crankshaft permitted.

FC

1. Change section 9.1.1.B.3.ee, p. 197, to read as follows: Only modifications or additions specifically covered by these regulations are permitted. All engine components not covered by these regulations shall remain completely standard and unmodified. *When a system is specified to be "unrestricted" (e.g. paragraphs r and t), the restrictions of this paragraph do not apply.*

Grand Touring

GT1

1. Clarify section 9.1.2.D.8.k.2.F, amended in TB 08-03, by adding the following before the last sentence: *Curved brackets will be measured as if they're in a flat plane as viewed from the side. Mounting brackets are to be included in measurement.*
2. Section 9.1.2.E.1.c, p. 265, Corvette C6 (bodywork only) (05-), change the notes to read as follows: ** ~~Bodywork from ACP only, 2" front splitter allowed. Effective 4/1/08 t~~ *T*he front undertray ~~and diffuser~~ included in the ACP kit shall be replaced with an undertray compliant with the GT1 rules. ~~The ACP front diffuser may be used until this date with a 50 lb. weight penalty.~~ Effective 6/1/08 the rear fascia and diffuser included in the ACP kit must be replaced with bodywork compliant with the GT1 rules. The ACP rear fascia and diffuser may be used until this date with a 50 lb. weight penalty. ~~Front and rear diffuser included in ACP kit shall not be utilized undertray must comply with GT1 rules.~~
3. Section 9.1.2.E.1.c, p. 264, add the Ford Fusion bodywork w/ 106" wheelbase.

GT2

1. Clarify section 9.1.2.F.4.b.13.F, amended in TB 08-03, by adding the following before the last sentence: *Curved brackets will be measured as if they're in a flat plane as viewed from the side. Mounting brackets are to be included in measurement.*
2. *Engines – FORD, p. 284, correct the 1993cc engine specs as follows: Engine Type: SOHC.*
3. *Engines – FORD, p. 284, correct the specs by deleting the 1997cc spec line in its entirety.*
4. *Engines – FORD, p. 284, correct the specs by deleting the 2980cc spec line in its entirety.*
5. *Engines – NISSAN, p. 289, change the specs for the 2960cc engine to read as follows: Weight(lbs): 2230 w/ 37mm SIR.*

GT3

1. Engines – ACURA, p. 296, change the K20A series engine specs to read as follows: Fuel Induction: Unrestricted.
2. Engines – AUDI, p. 299, change the 1984cc DOHC engine specs to read as follows: Fuel Induction: Unrestricted.
3. Engines – HONDA, p. 301, change the EW series engine specs to read as follows: Fuel Induction: Unrestricted.
4. Engines – HONDA, p. 301, change the K20A series engines specs to read as follows: Fuel Induction: Unrestricted.
5. Engines – MAZDA, p. 302, change the MZR 1999cc engine specs to read as follows: Fuel Induction: Unrestricted.
6. Engines – NISSAN, p. 307, change the SR20DE/VE series engine specs to read as follows: Fuel Induction: Unrestricted.
7. Engines – SAAB, p. 308, change the 1985cc DOHC engine specs to read as follows: Fuel Induction: Unrestricted.
8. Engines – TOYOTA, classified in TB 08-03, change the 7AFE series engine specs to read as follows: Fuel Induction: Unrestricted.
9. Engines – VOLKSWAGEN, p. 310, change the 1984cc DOHC engine specs to read as follows: Fuel Induction: Unrestricted.

The following GT3 changes are effective 6/1/08. Effective 11/1/08 the following engines will be required to run a 31mm SIR at the lighter weight.

1. Engines – ACURA, p. 296, **Effective 6/1/08,** change the K24 engine specs to read as follows: Weight(lbs): 2280 or 2180 w/ 31mm SIR.
2. Engines – BMW, p. 298, **Effective 6/1/08,** change the 2302cc engine specs to read as follows: Weight(lbs): 2280 or 2180 w/ 31mm SIR.

3. Engines – FORD, p. 301, **Effective 6/1/08,** change the 2189cc engine specs to read as follows: Weight(lbs): 2180 or 2080 w/ 31mm SIR.
4. Engines – FORD, p. 301, **Effective 6/1/08,** change the Duratech engine specs to read as follows: Weight(lbs): 2280 or 2180 w/ 31mm SIR.
5. Engines – HONDA, p. 301, **Effective 6/1/08,** change the K24 engine specs to read as follows: Weight(lbs): 2280 or 2180 w/ 31mm SIR.
6. Engines – MAZDA, p. 302, **Effective 6/1/08,** change the 2189cc engine specs to read as follows: Weight(lbs): 2180 or 2080 w/ 31mm SIR.
7. Engines – MAZDA, p. 302, **Effective 61/08,** change the MZR (2260cc) engine specs to read as follows: Weight(lbs): 2280 or 2180 w/ 31mm SIR.
8. Engines – NISSAN, p. 305, **Effective 61/08,** change the KA24E engine specs to read as follows: Weight(lbs): 2280 or 2180 w/ 31mm SIR.
9. Engines – NISSAN, p. 305, **Effective 61/08,** change the KA24DE engine specs to read as follows: Weight(lbs): 2280 or 2180 w/ 31mm SIR.
10. Engines – PORSCHE, p. 307, **Effective 6/1/08,** change the 2478cc engine specs to read as follows: Notes: Alt. 4 valve head #944 104 013 03 w/ 31mm SIR @ 2215 lbs or 33mm SIR @ 2315 lbs.
11. Engines – TOYOTA, p. 309, **Effective 6/1/08,** change the 2AZ engine specs to read as follows: Weight(lbs): 2280 or 2180 w/ 31mm SIR.
12. Engines – TOYOTA, p. 309, **Effective 6/1/08,** change the 2438cc engine specs to read as follows: Weight(lbs): 2280 or 2180 w/ 31mm SIR.

GTL

1. Classify the BLMI 1147cc engine in GTL.
   Add new spec line to GTCS, p. 314, Engines – BLMI, Engine Type: OHV, Bore x Stroke(mm): 69.34 x 76.2, Displ.(cc): 1147, Head Type: Iron, Non-crossflow, Valves / Cyl.: 2, Fuel Induction: Unrestricted, Weight(lbs): 1580.
2. Classify the Fiat 1300 engine w/ 1500 block in GTL.
   Add new spec line to GTCS, p. 316, Engines – FIAT, Engine Type: SOHC, Bore x Stroke(mm): 86.0 x 55.5, Displ.(cc): 1290, Head Type: Alum, Non-crossflow, Valves / Cyl.: 2, Fuel Induction: Unrestricted, Weight(lbs): 1670.
3. Cars – LOTUS, p. 319, change the Elan S2, S4 (Rdstr, Cpe, Drophead) specs to read as follows: Notes: Windshield may be removed and a low front hoop roll cage may be fitted. ~~Weight 1600 lbs.~~
4. Classify the Nissan QG18DE engine in GTL.
   Add new spec line to GTCS, p. 321, Engines – NISSAN, Engine Family: QG18DE, Engine Type: DOHC, Bore x Stroke(mm): 80.0 x 88.0, Displ.(cc): 1769, Head Type: Alum, Crossflow, Valves / Cyl.: 4, Fuel Induction: 24mm SIR, Weight(lbs): 2050.
5. Classify the Nissan CA18 engine in GTL.
   Add new spec line to GTCS, p. 321, Engines – NISSAN, Engine Family: CA18, Engine Type: SOHC, Bore x Stroke(mm): 83.0 x 83.6, Displ.(cc): 1809, Head Type: Alum Crossflow, Valves / Cyl.: 2, Fuel Induction: 25mm SIR, Weight(lbs): 1920.
6. Classify the Nissan CA18DE engine in GTL.
   Add new spec line to GTCS, p. 321, Engines – NISSAN, Engine Family: CA18DE, Engine Type: DOHC, Bore x Stroke(mm): 83.0 x 83.6, Displ.(cc): 1809, Head Type: Alum Crossflow, Valves / Cyl.: 2, Fuel Induction: 24mm SIR, Weight(lbs): 2050.

Improved Touring

1. Section 9.1.3.D.5.b.1, p. 335, in order to clarify that stock remote reservoir shocks may be retained, change the section to read as follows: Shock absorbers may be replaced provided *that replacements (a) attach to the original mounting points, and (b) are of a non-remote-reservoir design.* ~~they attach to the original mounting points.~~ The number and type (e.g., tube, lever, etc.) of shock absorbers shall be the same as stock. The interchange of gas and hydraulic shock absorbers is permitted. ~~Remote reservoir shock absorbers are prohibited.~~ External adjustments of shock control shall be limited to two (2). No shock absorber may be capable of adjustment while the car is in motion.

ITS

1. Mercedes-Benz 190 E 2.6L 12V (87-93), p. 347, change the specs to read as follows: Weight(lbs): 2695.

ITA

1. Classify the 94-97 Honda Accord EX in ITA.
   Add new spec line to ITCS, p. 353, Honda Accord EX (94-97), Engine Type: 4 Cyl SOHC, Bore x Stroke(mm) / Displ.(cc): 85.1 x 91.0 / 2157, Valves IN & EX(mm): (I)34.0 (E)29.0, Comp. Ratio: 8.8, Wheelbase(in): 106.9, Wheel Dia.(inch): 15, Gear Ratios: 3.29, 1.81, 1.19, 0.93, 0.69, Brakes Std.(mm): (F)259 Vented Disc (R)228 Solid Disc, Weight(lbs): 2735.

ITB

1. Porsche 924 & Sebring (77-82), p. 365, change the specs to read as follows: Weight(lbs): 2495.

Production

1. Correct section 9.1.5.E.1.b.1, p. 394, by adding to the section as follows: *Carburetor jet needles, metering rods and needle valves are unrestricted. Choke mechanisms, plates, rods, and actuating cables, wires, or hoses can be removed.*
2. *Clarify section 9.1.5.E.1.g.3, p. 397, by adding the following to the end of the section: Crankshaft main bearing cap girdles are unrestricted. Crankshaft main bearing caps can be more than one piece.*
3. *Clarify section 9.1.5.E.2.g.3, p. 403, by adding the following to the end of the section: Crankshaft main bearing cap girdles are unrestricted. Crankshaft main bearing caps can be more than one piece.*

EP

1. Classify the 01-02 Dodge Neon ACR in EP with Level 2 prep.
   Add new spec line to PCS-B, p. 418-419, Dodge Neon ACR (01-02), Prep. Level: 2, Weight(lbs): 2000 *2050 **2100, Engine

Type: 4 Cyl SOHC, Bore x Stroke(mm): 87.5 x 83.0, Displ.(cc): 1995, Block Mat'l: Iron, Head Mat'l: Alum, Valves IN & EX(mm): (I)33.3 (E)28.7, Carb. No. & Type: Fuel Injection, Wheelbase(mm): 2667, Track(F/R)(in): 62.3 / 62.4, Wheels(max): 15 x 7, Trans. Speeds: 5, Brakes Std.(mm): (F)257 Vented Disc (R)270 Solid Disc, Notes: Comp Ratio limited to 12.0:1, Valve lift limited to .500".

2. Classify the 06-08 Mazda MX-5 in EP with Level 2 prep.
   Add new spec line to PCS-B, p. 424-425, Mazda MX-5 (06-08), Prep. Level: 2, Weight(lbs): 2450 *2511 **2573, Engine Type: 4 Cyl DOHC, Bore x Stroke(mm): 87.38 x 83.06, Displ.(cc): 1999, Block Mat'l: Alum, Head Mat'l: Alum, Valves IN & EX(mm): (I)35.1 (E)30.0, Carb. No. & Type: Fuel Injection, Wheelbase(mm): 2329, Track(F/R)(in): 63.0 / 63.2, Wheels(max): 16 x 7, Trans. Speeds: 5 or 6, Brakes Std.(mm): (F)289.6 Vented Disc (R)279.4 Solid Disc, Notes: Comp. Ratio limited to 12.0:1, Valve Lift limited to .500".
3. Porsche 914-4, p. 426-427, change the specs to read as follows: Weight(lbs): 1820.

FP

1. Opel GT, p. 440-441, change the specs to read as follows: Weight(lbs): 1900, Carb. No. & Type: (1) 40 DCN, DCNF, IDF w/ 36mm choke(s), (2) auto type side draft w/ 36mm choke(s) on I.R. manifold, or fuel injection.
2. Opel Manta (71-75), P. 440-441, change the specs to read as follows: Weight(lbs): 1900, Carb. No. & Type: (1) 40 DCN, DCNF, IDF w/ 36mm choke(s), (2) auto type side draft w/ 36mm choke(s) on I.R. manifold, or fuel injection.

HP

1. Classify the Fiat X-1/9 1500 in HP with Level 2 engine prep and Level 1 suspension prep.
   Add new spec line to PCS-B, p. 456-457, Fiat X-1/9 1500, Prep. Level: 1/2 See Notes, Weight(lbs): 2070, Engine Type: 4 Cyl SOHC, Bore x Stroke(in): 3.40 x 2.52, Displ.(cc): 1498, Block Mat'l: Iron, Head Mat'l: Alum, Valves IN & EX(in): (I)1.43 (E)1.31, Carb. No. & Type: (1) 40 DCNF w/ 32mm choke(s), (1) 32 DTMR or 32 DATRA, or fuel injection, Wheelbase(in): 86.7, Track(F/R)(in): 56.3 / 56.6, Wheels(max): 13 x 6, Trans. Speeds: 5, Brakes Std.(mm): (F&R)227 Disc, Notes: Comp. Ratio limited to 11.0:1, Valve Lift limited to .450:. Drive train Level 2 preparation only. Listed spec line weight does not change with alternate or stock transmission. Fuel cell may be located in front trunk.
2. Classify the 07-08 Honda Fit in HP with Level 2 prep.
   Add new spec line to PCS-B, p. 458-459, Honda Fit (07-08), Prep Level: 2, Weight(lbs): 1900 *1948 **1995, Engine Type: 4 Cyl SOHC, Bore x Stroke(mm): 73.0 x 89.4, Displ.(cc): 1497, Block Mat'l: Alum, Head Mat'l: Alum, Valves IN & EX(mm): (I)27.65 (E)23.15, Wheelbase(in): 96.5, Track(F/R)(in): 61.5 / 61.3, Wheels(max): 15 x 7, Trans. Speeds: 5, Brakes Std.(mm): (F)261.6 Vented Disc (R)200.7 Drum, Notes: Comp. Ratio limited to 11.0:1, Valve Lift limited to .390".

Showroom Stock

SSB

1. Acura RSX Type-S (02-04), p. 490, add to the specs as follows: Notes: Factory limited slip from 06-08 Civic Si, P/N 41200-PNT-003, permitted.
2. Acura RSX Type-S (05-06), p. 490, add to the specs as follows: Notes: Factory limited slip from 06-08 Civic Si, P/N 41200-PNT-003, permitted.
3. Chevrolet Camaro V-6 (96-02), p. 491, add to the specs as follows: Notes: Z-28 front sway bar – 30mm allowed.
4. Mazda6 s, p. 492, add to the specs as follows: Wheel Size(in) / Mat'l: 18 x 7 Alum, Tire Size(stock): 215/45.
5. Mini Cooper S (02-04), p. 492, add to the specs as follows: Notes: Factory limited slip from 05-06 Cooper S permitted.
6. Pontiac Firebird V-6 (96-02), p. 492, add to the specs as follows: Notes: Z-28 front sway bar – 30mm allowed.

Spec Miata

1. Section 9.1.8.C.1.i, p. 503, the camshaft specs for the Spec Miata class have been updated. The updated specs, labeled revision #2 are required effective 5/1/08.
2. Correct the last paragraph of section 9.1.8.C.4.b, amended in TB 08-03, to read as follows: A *metal or delrin plastic* spacer as shown below may be added between the Mazda bump stop…

Sports Racing

CSR

1. Section 9.1.9.A.2.a. CSR Engine Table, p. 519, change line E. 4 cycle Motorcycle-based engines (1400cc) to read as follows: Max Displ.(cc): 1450.

S2000

1. Change section 9.1.9.B.5.ee, p. 531, to read as follows: Only modifications or additions specifically covered by these regulations are permitted. All engine components not covered by these regulations shall remain completely standard and unmodified. *When a system is specified to be "unrestricted" (e.g. paragraphs r and t), the restrictions of this paragraph do not apply.*

Touring

T1

1. Ferrari 360 Modena & Challenge (00-02), p. 576, correct the Notes by deleting the second sentence as follows: ~~Rollcage shall meet current T1 class specs.~~

Note: This is addressed in GCR section 9.4.G.8.

T2

1. Chevrolet Cobalt SS (2008), classified in TB 08-01, add to the specs as follows: Weight(lbs): 3050, Notes: 39mm Turbo Inlet Restrictor required.
2. Chevrolet HHR SS (2008), classified in TB 08-01, add to the specs as follows: Weight(lbs): 3050, Notes: 39mm Turbo Inlet Restrictor required.

3. Ford Mustang Coupe GT & Shelby GT (05-07), p. 580, add the 08 model year.

T3

1. Honda S2000 (00-07), p. 583, correct the specs to read as follows: Gear Ratios: 3.13, 2.05, 1.48, 1.16, 0.97, 0.81, or 3.13, 2.05, 1.48, 1.16, 0.94, 0.76.
2. Mazda Mazdaspeed Miata (04-05), p. 584, add to the specs as follows: Notes: Canton Accusump #24-026, Flex-a-lite install sandwich #3965, and related hoses, valve, and bracket allowed.

SUPPLEMENTARY REGULATIONS

'08 National Championship RUNOFFS® Heartland Park Topeka

Held under under the 2008 General Competition Rules
#IDC-08-S
Online Registration at www.scca.com

1. Entries
2. Driver Eligibility
3. Tow Fund
4. Registration & Credentials
5. On-track Sessions
6. Grid
7. Start/Finish
8. Timing & Scoring
9. Pre-race Tech Inspection
10. Impound & Post Race Inspection
11. Decals/Patches
12. Penalties/Protest/Appeals
13. Race Results
14. Rules of Operation/Pits/Paddock
15. General Info
16. Race/Driver Info.

1. Entries: All drivers shall be current Sports Car Club of America (SCCA) members in good standing, hold a current National Competition License and meet all criteria as listed under section 1 and section 2.

1.1. Driver Eligibility: Drivers may enter as many classes as they wish and drive any car eligible for that class, provided they meet all driver eligibility requirements for each class entered.

1.2. One Vehicle, Multiple Classes: A driver may enter one vehicle in more than one class at this event. The driver shall have qualified for each class entered per these supplemental regulations and the vehicle shall be capable of meeting all requirements and specifications for those classes. Separate entry forms and fees are required for each class entered.

1.3 Car Numbers: 2007 Runoffs® participants will be given the opportunity to choose their 2007 car number in the same class in 2008. These competitors will have until 9:00 am, July 22nd, CDT to register thereby securing their 2007 number. All 2007 numbers not registered to a 2008 participant will be released and available to anyone. 2007 defending National Champions desiring # 1 should contact the SCCA Club Racing office for Number Assignment (see number 8.1 in the Supplemental Regulations).

1.4 Registration: Online registration will be available at www.scca.com. Paper entry forms and fees (under same cover) shall be faxed to 785-232-7214 or mailed to:

SCCA
Attention: Club Racing
P.O. Box 1833
Topeka, KS 66619

All fields of the entry form shall be completed to be valid. The driver bio is optional. The entry fee shall accompany the entry form (see section 1.6).

1.5. Early Entry: Paper or Online **entries will not be accepted before 9:00 a.m., July 8th, 2008, CDT.** Entries received prior to July 8 will be returned. Volunteer Registration will begin at 9:00 a.m. June 10th, 2008 CDT.

1.6. Entry Fee: Online Early Bird entry fee is **$350** payable with Visa or Mastercard. Paper entry Early Bird entry fee is **$360** (US Funds) payable to SCCA, Inc. The paper entry fee includes a $10 special handling fee. After midnight (CDT), Friday, September 5, 2008 (online, postmarked or dated by an express delivery service) the entry fee is $550 for online or $560 for paper entries.
Note: An additional $25 fee will be charged for checks returned for insufficient funds.

1.7. Cancellation and Refunds: The cancellation deadline for a **full** refund is midnight (CDT) **Monday, September 15, 2008**. Driver/entrant may cancel by the following methods:
Fax: (785) 232-7214 **U.S. mail** (see section 1.4) **E-mail:** runoffs@scca.com
Cancellations received between **Sept. 16 & Oct. 5 will be refunded the entry fee less $175**. If your entry is not accepted for the Runoffs, you will automatically receive a full refund.

1.8. Entry Acceptance: SCCA will not accept entries from drivers who do not meet the requirements of GCR Section 3.9.2.A. or 3.9.2.B. and the guidelines as set forth in these supplemental regulations.

1.9. Schedule Modification: SCCA reserves the right to modify the schedule based on the number of entries in each class. Any class that does not have at least 30 entries by the Sept. 5th deadline may be combined with another class or classes for all sessions, including races.

2. Driver Eligibility: Entries will be accepted for this 2008 Interdivisional Championship Event from those drivers who meet the following for each class entered:

2.1. Shall have been classified as a starter in at least four (4) National Championship events in the current race season, of which two (2) shall have been in their Division of Record and have been classified as a finisher in at least three (see GCR 3.9.2.A./B/.C/.D. GCR 6.7.2 and GCR 6.7.3).

2.2. Shall have finished in the top ten (10) in their class in their division's 2008 National points standings.

2.3. Shall have accumulated at least four (4) National Championship points in 2008.

2.4. Defending National Champions: See section 3.9.2.B on page 20 in the 2008 GCR for requirements.

2.5. If you are not sure you have sufficient points to qualify, send an entry anyway. If the entry is denied, your entry fee will be refunded in full. Drivers who believe their points accumulation totals for Divisional Championship standings and National Championship Runoffs invitations are in error, shall contact their Divisional Pointskeeper, before the entry deadline, for resolution. Only if satisfaction cannot be achieved at the Divisional level should a driver/entrant contact the National office for review of the matter.

2.6. Ties: In the event of a tie for tenth place, the first consideration for breaking the tie will be the above Driver Eligibility, followed by GCR 3.9.1.C.

3. Travel/Tow Fund: A Tow Fund will be collected and maintained by the SCCA during the 2008 season for the purpose of partially reimbursing the expenses of certain drivers invited to the Runoffs.

3.1 Fund Determination: A driver's payment will be determined by the following: Straight line mileage from the driver's permanent residence to Heartland Park Topeka (HPT). The address will be checked against the permanent residence of the driver as of the date the entry is received at the National Office. The permanent residence will be the residence listed on the driver's last license renewal application unless a notice of change of permanent residence has been received before the receipt of the entry. Note: False representation of permanent residence may result in penalties as provided in GCR section 7.2.

3.2 Distribution of Tow Fund: Tow fund will be paid to drivers who meet the following criteria: Top three (3) drivers with the highest points total in each class from each Division that attend the event (no tow money will be paid to drivers living closer than 200 miles) and the maximum mileage to be paid will be 2,100 miles. Shall enter on time and entry be accepted

to participate in the Runoffs. Shall complete registration, Tech inspection and be on-track at least once during the week. Note: Tow fund may not be paid to drivers/entrants who were disqualified from their race (see Penalties section 7.2.H). In the event there is an unbreakable tie within a class and Division (see GCR 3.9.1.C.) affecting Tow Fund payout, both parties will receive payment.

3.3. **Mailing of Funds:** The National office will make every effort to make Tow Fund checks available after race results are official. Please see Driver Information for check availability. If checks are not available at the track Tow Fund checks will be mailed as soon as possible after the event. The name and address on the check will match that of the W-9 form each driver completed during registration prior to receiving check. A Federal Tax ID number may be used in lieu of a Social Security number. In these instances, the W-9 shall be completed using the Tax ID company name; the tow fund check will be issued to that named company. Federal Tax ID and Social Security numbers will be reported to the Internal Revenue Service as income for anyone who receives over $600 in tow fund.

3.4. **Tow Fund Claim Deadline:** All inquires regarding tow fund shall be made by December 15, 2008. Drivers/entrants who dispute funds received or believe they should have received funds shall contact SCCA Club Racing by December 15, 2008. No claims made after this date will be considered.

4. Registration and Credentials: All times are Central Time Zone.

4.1. **Registration Hours**

Thurs	Oct. 2	9:00 a.m. - 6:00 p.m.
Fri-Sun	Oct. 3-5	7:00 a.m. - 6:00 p.m.
Mon-Thurs	Oct. 6-9	7:00 a.m. - 5:00 p.m.
Fri	Oct 10	7:00 a.m. - 5:00 p.m.
Sat	Oct. 11	7:00 a.m. - 4:00 p.m.
Sun	Oct 12	7:00 a.m. - 12:00 p.m.

4.2. **Entry into Heartland Park Topeka:** Drivers/entrants, crew and volunteers **without** transport vehicles or RVs may enter Heartland Park Topeka after registration hours by showing a current SCCA membership card and signing the HPT waiver. Participants shall report to Registration the following day to sign in and receive event credentials. HPT will supply SCCA with a list of people entering after hours each day. No race, transport vehicles or RVs will be allowed to enter after Registration closes for the day.

4.3. **Hot-Pit Access:** All crew members who need to be in hot-pit areas shall be listed as crew on the driver's entry form. SCCA shall provide a maximum of four passes per entry for use by the driver and bona fide pit crew actually engaged in the servicing of each particular automobile.

4.4 Only the driver or entrant may add/change free or overcrew names. The addition or transfer of crew names to any entry other than the team for which they will provide their services is prohibited. **WEEKEND SCCA MEMBERSHIPS ARE NOT VALID FOR USE DURING THE RUNOFFS.** Additional passes can be purchased from Heartland Park Topeka for $40 each.

4.5. Anyone found tampering with credentials shall be reported to the Chief Steward and is subject to penalties specified in GCR Section 7.2 Penalties.

4.6. Commemorative photos IDs will be available at the track for $5.00 each.

5. On-track Sessions

5.1 **Qualifying Sessions:** During the first qualifying sessions Monday, Oct. 6th and Tuesday, Oct. 7th, a *white flag* will be shown on the first lap for each group at each staffed corner station as information for drivers regarding corner station location per GCR 6.11.2. E. Grid positions for the first qualifying session for each class will be by random number draw. The draw will be done on Sunday, October 5th and the results will be posted at Driver Information the same day. For qualifying sessions 2 and 3 the grid position will be determined by fastest times from the previous session. This process is **NON-PROTESTABLE.** All cars not on the grid prior to the one minute signal shall relinquish their qualifying grid position and start the qualifying session from the back of the field.

5.2. **Eligibility for a Race Start:** To be eligible to start the race, all cars shall qualify within 120 percent of the average of the fastest three qualifying times for their respective class. The Chief Steward may issue waivers to cars qualifying outside of the required 120 percent at his discretion. Requests shall be made within 30 minutes of the posting of the grid. Cars allowed to start at the back of the grid may be black flagged if lapped or fail to maintain a safe racing pace during the race.

5.3. **Hardship Sessions:** Friday, Saturday and Sunday sessions will be for hardship only. Any competitor may request permission to participate in the hardship lap sessions; same day racers will have priority. Hardship laps are intended to allow competitors to check on the state of their car after repairs or adjustments have been made. Each competitor that wishes a hardship lap must request a pass for a hardship session from the Chief Steward or one of his designates prior to their race day. The pass must be presented to grid personnel prior to entering the track. The hardship lap will consist of a single traversal of the circuit from pit exit to the pit entrance. Markers will be placed on the track surface to remind competitors not to proceed past the pit entrance.

5.4 **On-track Lights:** Yellow lights are positioned on the bridge past Turn 9 (over tunnel). When displayed, these lights have the same meaning as the yellow flag per GCR 6.11.2.B.. The steady yellow will have the same meaning as a standing yellow. The flashing yellow will have the same meaning as a waving yellow.

5.5 "Doughnuts" or reckless driving is not allowed on the track, in the paddock or on HPT property at any time.

6. Grid

6.1 All cars shall enter the race track through the grid area located on the north end of the lower paddock. Cars shall be in position and the grid cleared of crew at the one (1) minute warning. Cars late to the grid shall enter the course from the grid through the pit lane. The next scheduled group shall not line up until the previous group has cleared the grid area. This is to keep the paddock roads clear for other traffic.

6.2. With the permission of the Chief Steward, multiple class drivers who have back-to-back qualifying sessions may have their second car staged in the pit lane. The driver shall forfeit their qualifying position and be released from the pit lane at the back of the field.

7. Start/Finish: ***THE START/FINISH LINE FOR ALL STARTS AND RESTARTS WILL BE ON THE FRONT STRAIGHT.***

7.1. **Pace laps:** There will be two (2) pace laps at the start of each race. These two (2) laps do NOT count as race laps. The first pace lap will take the short course at Turn 1 (left) and the second pace lap will be a full course lap.

7.2. **Wave Off:** In the event of a wave off of the first racing lap, the grid will continue at pace speed until the green flag is displayed by the Starter.

Should the Chief Steward determine that a false start has occurred and the race started, the driver or drivers deemed to be at fault may be black flagged and held up to one (1) minute in the pit lane. Other penalties may also be imposed (GCR 7.2).

7.3. **Length of Race:** Official track length is 2.5 miles; all races will be eighteen (18) laps or 40 minutes, whichever comes first. The 40 minute time limit will be in effect for all races commencing when the pole car crosses the Start/Finish line at the beginning of the first scored lap and shall continue uninterrupted with no stoppages for any situations. Finishers are defined according to GCR 6.7.3. The posted race times are green flag times.

7.4. **One Lap to Go:** A one lap to go sign with a number 1 will be displayed at the Start/Finish line indicating the last lap.

7.5. **Victory Lap:** Each class winner may take a victory lap per GCR 6.8.7.

8. **Timing and Scoring:** All corrections, i.e., name and/or sponsor changes/additions, shall be submitted to Timing and Scoring before 5:00 p.m. on the last day of qualifying.

8.1. **Car Identification Numbers:** Car numbers are available on a first-come, first-served basis. **2007 Runoffs Participants who register by 9:00 am CDT July 22nd will be able to retain their 2007 Runoffs number in the same 2008 class unless they chose to change numbers when register.** The official paper event entry form provides space to indicate six (6) possible numbers of your choice. The official online event entry form allows you to choose your number from the remaining available numbers. Permitted numbers range from 00 through 99. Defending National Champions have the right of refusal for car #1 in their respective class. If defending Champion refuses #1 it will not be assigned. **Changes to assigned numbers shall be made before 5 pm CDT September 15, 2008.** Car numbers shall be in strict adherence to the GCR and are subject to approval by the Chief of Timing and Scoring. Illegible numbers may not be timed or scored. In addition to having numbers on the end plate, all Formula cars are encouraged to have numbers elsewhere on the car.

8.2. AMB TRANX 260 Transponders are required for all on-track sessions. All cars shall be equipped with a working transponder. If the transponder fails you may not receive all lap times or scoring.

8.3. To prevent interference with the timing and scoring equipment, no team or personal timing devices, or pit crew, will be allowed within the designated area on the pit wall at the official timing line and at the finish line. Team timing equipment shall be placed in the area designated at the split in the middle of the pit lane.

9. **Pre-race Tech Inspection**

9.1 **Tech Inspection Location and Hours:** Tech Inspection will be held at the Registration building in the morning and at the Tech Building in the afternoons. Tech Inspection is on a first-come, first-served basis during the following hours:

Registration Building (Express Tech only - see section 9.3)		Tech Building	
Thurs, Oct 2	9:00 a.m. - 3:00 p.m.	Fri-Sun, Oct 3-5	8:00 a.m. - 6:00 p.m.
Fri-Sun, Oct 3-5	7:00 a.m. - 12:00 a.m.	Mon-Sun, Oct 6-12	7:45 a.m. - 6:00 p.m.

Note: Tech Building will close by 8:00 PM CDT each day. Any inspections not completed by this time will be carried over to the next day.

9.2. **Rules of Tech:** The following shall be adhered to without exception: **No engines will be run in the Tech area at any time during the week, unless directed to do so by a Tech official. Push cars in and out of the area. Smoking is prohibited in the Tech area. Non-licensed minors and pets are prohibited from the Tech area.**

9.3. **Express Tech:** If your car does not need an annual Tech and its logbook has no unresolved notations, you are eligible for Express Tech and do not need to present your car for Technical Inspection. After you have registered, please bring the following items to Tech: *Vehicle logbook, helmet with a 2008 Club sticker, all Driver's suits to be used during the competition with official Club Racing patches on each suit and with the patches for any non-SCCA sanctioning body removed or covered, Tech sheet/vehicle declarations page (included in driver packet).*

9.4. **Full Tech:** If notations exist in the logbook, the car needs an annual Tech, or the helmet sticker is not found, the car and/or gear shall be presented at Tech. All new cars requiring the issuance of a logbook shall be brought to the Tech area. Cars needing homologation shall have this accomplished prior to arrival at Heartland Park Topeka.

9.5. **Tech Stickers:** The Runoffs decals are your Tech inspection stickers and shall be placed on both sides of the vehicle, lower front quarter panel on full fendered cars and on either side of the engine cover on formula cars and sports racers. In the event this placement is not possible, the Assistant Chief Steward of Tech will be responsible for the final placement of the Runoffs decals. No vehicle will be allowed to participate in this event without the Runoffs decals properly placed at **all times** during the **National Championship Runoffs** from Monday, October 6, 2008, through Sunday, October 12, 2008. A Runoffs decal will not be issued until your vehicle(s) has been approved by Tech officials.

9.6. **Inspection Purpose:** Tech inspection will concentrate primarily on safety. The Tech Inspector will note on the back of the Tech card any items observed during the course of this inspection as non-compliant with GCR eligibility and/or preparation limits. The driver shall sign the back of the Tech card to only acknowledge awareness that these discrepancies exist.

9.7. **Eligibility and Preparation Resolution:** The Chief Steward will resolve all matters of eligibility and/or preparation non-compliance no later than ninety (90) minutes after the final qualifying session on Thursday, October 9, 2008. In addition, any car impounded after its qualifying session that has a Tech card bearing the above-mentioned notations and on which the noted items are unchanged, will automatically be reported to the Chief Steward.

9.8. **Two-way Radios:** All cars may employ two-way radios. You may be required to change frequencies if interference occurs with event officials and/or track communications. Operation of radios is prohibited on the following UHF frequencies: *462.0500, 462.15000, 463.67500, 464.3375, 464.80000, 466.1125, 468.67500, 469.800.*

9.9. **Back-up Car Procedures:** Any additional cars and/or chassis that may be used at any time during the event shall be presented at Tech. The driver shall inform the Chief of Tech of said substitution no later than 90 minutes before the start of the next session for that car/class. The Chief of Tech shall inform the Chief Steward directly or through the Tech Steward. The driver shall be informed that any and all qualifying times and/or positions recorded by the driver/car combination before the substitution will be removed; the driver shall re-qualify, if another such session is available, or be grided at the rear of the grid if qualifying has been completed.

9.10. **Tire Rules:** Formula Mazda Tire Rule 9.1.1.F.14.(A,B,C,E) and SRSCCA Tire Rule 9.1.9.G.13. (a,b,c) will not be in effect at this event. Sections of the rules not specifically mentioned remain in effect.

9.11. **Scales:** The official scales will be available to drivers/entrants for the purpose of weighing their cars, according to the Schedule posted at Tech, except on a not-to-interfere basis during a class impound. Scales are located in the Tech building.

9.12. **Grid and Pit Lane Tech:** Tech Inspectors may be conducting additional visual inspections of race cars on the Grid and on the Pit Lane. These inspections will be non-intrusive. Items not in compliance will be noted and the competitor will be directed to Tech at the end of their session for additional inspection.

9.13. **Stock OEM Components:** Tech may exchange stock OEM components with parts supplied by SCCA for Touring, Showroom Stock and Spec Miata cars.

9.14. **Fuel:** All cars shall use fuel purchased from the track as follows:

Class	Octane	Leaded or Unleaded
SRF, Spec Miata, Showroom Stock, Touring, rotary engine, and cars permitted to use fuel per IT requirements	100	Unleaded
Remaining Production, American Sedan, GT, Formula, Sports Racers	110, 112, or 116	Leaded

Competitors shall declare which fuel they are using. Mixing fuels of different octane is prohibited. These fuels shall be purchased from Heartland Park Topeka and will be tested in accordance with the official Runoffs fuel testing procedure. A copy of this procedure will be available in Tech. Before Monday's first session or if you have changed fuel types, at a **MINIMUM**, we recommend draining your tank/cell, then add a few gallons of your spec fuel, run the car and drain the tank/cell again. The track fuel pumps will be open Monday, September 29th through Sunday, October 12, 2008.

9.15. **Fuel Testing:** Fuel testing for compliance with section 9.14 of these supplemental regulations may be implemented during qualifying and post-race inspection. Fuel testing will be available to all competitors on a voluntary basis. The scheduled times for voluntary fuel testing will be posted at Tech.

9.16. **Data Acquisition:** SCCA Technical Staff and/or Club Racing Board members and their delegates may install data acquisition equipment in a competitor's car. This program is to assist the CRB in competition adjustments; participation is mandatory, not optional and is **NON-PROTESTABLE.**

10. **Impound and Post Race Inspection:** At the conclusion of each race, the first six (6) cars in each class shall proceed to the Tech area. Impound passes will be issued to the driver and three crew members of the impounded cars. Additional cars may be ordered to the Tech area at the discretion of the Chief Steward. Cars shall remain in the Tech area with a minimum of one crew member until released. Crew members may leave the Tech area after checking out with the Clerk of Tech.

10.1. At the conclusion of each qualifying session, all or some of the cars in each class may be impounded. The Chief Steward may require additional post-qualifying inspection at his discretion.

10.2. Tech inspectors may employ non-intrusive measuring devices (P&G gauge, Whistler, etc.) throughout the week. These devices are used for a quick estimate of the measurement and do not ensure that the reading will be the same as that done during a detailed inspection, which may occur at a later time.

10.3. During post race impound, admission to the Tech area is restricted to authorized drivers, officials and crew members with proper credentials. (See section 10. Impound and Post Race Inspection)

10.4. Competitors are responsible for performing required disassembly and/or reassembly of their car, as well as any resulting expenses incurred. All competitors shall be prepared to conduct disassembly in an expeditious manner and may be penalized for failing to do so. All competitors shall be under the control of Tech officials during post race impound and shall comply with all directives.

10.5. Any part found to be in non-compliance with the GCR specification book and/or supplemental regulations may be retained by the SCCA, Inc. and disposed of at a later date, at its discretion.

10.6. The first place car in each class, and others at the Chief Steward's discretion, will receive at least the following post-race inspection: Removal of cylinder head for measurement of bore, stroke and valve size, where restricted by the rules for the class and category. A P&G gauge or other measuring device may be used in place of cylinder head removal at the option of the Chief Steward. Teardown will begin within 45 minutes following the conclusion of post race ceremonies. Teardown shall be completed within 4 hours, except for Showroom Stock, Spec Miata, Touring and AS. The Chief Steward may modify these procedures at his sole discretion.

10.7. **Disabled Race Car Parking:** Disabled cars will be parked adjacent to Tech. Removal of any automobile shall be approved by the Log Book Tech Inspector.

11. **Decals and Patches**

11.1 All GCR required decals and patches, as well as vehicle logbooks, are available in Tech.

11.2 All decals and patches required for Contingency programs will be available at Driver Information located at the base of the Scoring Building (Sunday, October 5th from 1-4 pm and 8am-5pm October 6-12, 2008.

11.3 GCR required driver suit patches will be checked during pre-race Tech inspection. Non-SCCA sanctioning body decals and patches shall be removed or covered on the driver's suit(s) and racecar. **NO DRIVER WILL BE ALLOWED ON THE PODIUM WITHOUT APPROPRIATE SCCA PATCHES ON THEIR DRIVER SUIT.**

12. **Penalties / Protests / Appeals:** Penalties will be as stated in GCR section 7.2, except as follows: Drivers may be excluded from competing in the following year's Interdivisional Championship Event. ***Tow fund may not be paid to drivers/cars disqualified from the event.***

12.1. **Protests:** All protests shall be lodged at the Competitor Services Center, which is located in the Scoring Building. Driver advisors will be available to provide assistance. Protests shall be filed and will be heard in accordance with the provisions of Section 8.3 of the GCR except as follows: Anyone who may be involved in a protest and fails to be available for the Court hearing waives their right to be heard and/or to call witnesses, as all protests shall be resolved at the event. Protests against the validity of an entry or the eligibility of a driver, entrant or automobile, shall be lodged no later than ninety (90) minutes after the final qualifying session for the class of car being protested.

12.2. **All decisions or penalties rendered by the Stewards of the Meeting may be appealed.**

12.3. **Appeals:** The Court of Appeals is listed under "Officials" and has been assigned to bring final resolution of all event disputes. As all appeals shall be resolved at the event, anyone who may be involved in an appeal and fails to be available for the Appeal Court hearing waives their right to be heard and/or to call witnesses. Appeals will be handled in accordance with GCR, Section 8.4, with the following exceptions: Appeals shall be submitted to the Competitor Services Center. The time limit for receipt of an appeal is one (1) hour following announcement of the First Court's decision. **A decision on whether or not an appeal will be heard and disposition of the fee will be fully resolved at this event.**

13. **Race Results:** Results will normally be posted within 30 minutes after the conclusion of each race at Drivers Information located at the north end of the Scoring Building. Upon completion of the event, each competitor will be mailed the final results book.

14. **Rules of Operation/Pits/Paddock:** **Note: All fees listed below are set by Heartland Park Topeka.**
TRACK ORDINANCE: Racing engines shall not be run after 10:00 pm or before 6:30am

14.1. **Vehicle Registration and Rules of Operation:** All utility vehicles (including golf carts, rented or personal, plus pit trolleys, 3 and 4 wheelers, tractors, motorbikes and mopeds) must display a vehicle pass (sticker) that shall be purchased at Registration for $50. The sticker must be affixed to the registered vehicle along with car number and class. Note:

Vehicle passes for handicapped persons will not be charged. Vehicle passes will not be required for bicycles. **Bicycles are restricted to the paddock area only.**

14.2. Non-licensed vehicles, except golf carts, rented or personal, and utility vehicles with an affixed vehicle pass are prohibited outside of the paddock area. Golf carts, other personal transportation and utility vehicles in the spectator areas are restricted to designated areas.

14.3. Speed limit is 10 miles per hour.

14.4. Only licensed drivers may operate pit vehicles.

14.5. Pit vehicles shall be used only for essential transportation and hauling.

14.6. Reckless and dangerous driving, speeding, or disregard for pedestrians will cause revocation of the sticker and/or disciplinary action by the Stewards, per GCR section 7.2 (Penalties).

14.7. For the purpose of testing, scrubbing tires, bedding brakes, etc., no race cars will be allowed to leave or use the roads within the facility. The only race cars that will be allowed to be driven out of the facility will be the cars specifically used by competitors for day-to-day transportation (for example, Showroom Stock cars) or race cars going to the Engine Dyno located outside Gate C. Race cars are prohibited to be driven outside the paddock area (except as noted above). **REMEMBER, DRIVERS/ENTRANTS ARE RESPONSIBLE FOR THE ACTIONS OF CREW MEMBERS.**

14.8. Rules of the Pit Lane and the Grid: The following are **prohibited** from the Pit Lane and the Grid: Smoking, Skateboards, Roller skates/blades, Scooters, Children's tricycles, Motorcycles, all motorized two-wheeled vehicles.

14.9. **Shoes that cover the entire foot are required of those entering the Pit Lane area. Sleeved shirts are required in the Pit Lane.**

14.10. Pets are welcome at Heartland Park Topeka Topeka. Owners are required to keep their pets on a leash and clean up after them. HPT reserves the right to remove pets and owners who do not comply with the track regulations. Unruly or dangerous animals are not allowed at any time. **You are responsible for the actions of your animal.**

14.11. Posting of private classified For Sale signs is allowed in designated areas only. Heartland Park Topeka reserves the right to remove any advertisements that do not comply with these regulations or that are offensive.

14.12. **Rules of the Paddock:** Do not poke holes in or otherwise damage the hard surface of the paddock for tent stakes or for any other reason. **Violators will be fined and removed from the event.**

14.13. **OIL, GAS, CHEMICALS AND ALL FLUIDS MUST BE DISPOSED OF IN PROPER CONTAINERS.** Special oil and fluid reclamation stations will be accessible throughout the garage and paddock areas. Please observe the instructions and only pour waste oil and fluids into the appropriate containers. Should something accidentally spill, please try to minimize the situation by cleaning up the affected area and notifying HPT personnel immediately.

14.14. **Parking:** If you are participating in the Solo Nationals event and the Runoffs and wish to leave your equipment at HPT between events, you must notify Heartland Park Topeka (Ed Ozment at eozment@hpt.com or 800-43RACES or 785-862-4781) of your intentions so that arrangements can be made. Unless prior arrangements have been made with Heartland Park Topeka, teams arriving prior to Sunday, September 28th, 2008, may not have access to the facility. NOTE: Drivers/volunteers are permitted to stay over Sunday night, October, 12, 2008, but need to vacate by 10:00 a.m. Monday, October, 13, 2008.

14.15. **Reserved Parking:** Optional reserved paddock parking may be obtained through Heartland Park Topeka after you have successfully registered for the event through SCCA's Runoffs registration. There will be a link to the Heartland Park Topeka website, which will have all available spaces for reservation.
All spaces will be $100. Spaces range from 25x40 to 30x60. Each competitor may only reserve one (1) spot per entry.
If you do not wish to reserve/pay for a parking spot, non-reserved free parking will be available on a first come first served basis starting at 12:00 PM CDT on Sunday, October 5th.

14.16. All vehicles shall be parked within your designated paddock spot. If the vehicle does not fit in this area, it shall be parked in designated overflow parking areas. Each entry will be issued one parking pass designated specifically for your paddock area. This pass will allow access to the paddock area only. Additional passes may be provided by HPT contingent on all vehicles fitting into the paddock space. All personal vehicles that are parked in "no parking areas" or that do not have the proper parking pass for that area will be towed. If you have an oversized rig that will not fit in the sizes of the spaced noted in 14.15, contact Ed Ozment at HPT before you reserve your spot for assistance.

14.17. No enclosed trailer will be parked in any paddock area unless one or more race cars are inside. Motor homes with enclosed trailers may be in the paddock space if all vehicles fit in the assigned paddock space. There are designated areas for motor homes and trailers if they cannot fit within the designated paddock area. Parking marshals will have the right to inspect enclosed trailers and other vehicles for race cars.

15. General Information: Note: All fees listed below are set by Heartland Park Topeka.

15.1. SMOKING IS PROHIBITED INDOORS, as well as TECH, GRID, PIT LANE and WITHIN 20 FEET OF THE SCORING BUILDING MAIN ENTRANCE.

15.2. Camping: Overnight competitor camping in the paddock or track-side shall be in a legitimate, self-contained motor home. No exceptions. Overnight tent/non-self contained vehicle camping will be available in designated areas only. Bonfires or open fires are allowed in approved areas only. Outdoor cooking is allowed, but please keep safety in mind. Personal fireworks are not permitted on the grounds of Heartland Park Topeka. Please leave the grounds as you found them.

15.3. Motorhome spaces with electricity are available for $150 and can be reserved through **www.hpt.com**. (There is no charge for motorhome spaces without electricity). There will be no working on race cars in the motorhome spaces with electricity. Electrical RV spaces are not to be used as competition paddock spots. Motorhomes have access to the dumping station outside the paddock behind Registration. Services such as dump and fill will be available for an additional fee. Once the team motorhome or trailer is parked in its assigned space in the paddock, there will be no relocation unless directed by the Track Paddock Marshal. Please make your own provision for electricity, such as a generator.

16. Race/Driver Information: Driver Information is located in the Scoring Building and is the "information center" for participants. A satellite driver information station will be located near Tech. Only qualifying times and race results will be available at the satellite location.

16.1. Driver Information includes the following: Qualifying times, Race results, Sound control reports, Protest and appeal results Messages and notification of parcel delivery. Paddock location of other participants may also be available.

16.2. All requests for public address announcements can be made at Driver Information. Please go to Driver Information with all of your questions before going to Heartland Park Topeka or on-site SCCA offices.

16.3. **Package Delivery:** Deliver all packages to: Heartland Park Topeka, 7530 S Topeka Blvd, Topeka, KS 66619. Packages should not be sent before September 29th, 2008. Packages **MUST** include name of recipient or team name or delivery will be refused. Packages may be picked up between 9:00 a.m. - 4:00 p.m. at the designated shipping and receiving area. All freight deliveries will be delivered to the maintenance building. No COD packages will be accepted. Packages not picked up will be returned COD only if requested by a competitor and a credit card is provided for handling. NO RUNOFFS PACKAGES WILL BE ACCEPTED AT SCCA, INC HEADQUARTERS DURING THE EVENT.

Race Officials

Race Administration
Marina Kraft, Nat'l Administrator

Chief Steward
Jim Averett
Dennis Dean, ACS

Registration
Chief Registrar
Rusty Goodale,
Nat'l Administrator
Asst. Chief Registrars

Asst. Chief - Operating
Barret Braun
Chuck Dobbs
Brian Holtz
Jim Rogaski
Laurie Sheppard

Tech Stewards
Skip Yocom, ACS Tech

Stewards of the Course
Cathy Barnard

Pace Car Drivers
R.J. Gordy
Howard "Duck" Allen
John Sheridan
Ric Green

Safety Stewards
Dan Miklovic

Stewards of the Meet
Ken Patterson- Chairman, MWDiv
Tom Brown, SWDiv
Mike Engelke, CENDiv
Steve Harris, GLDiv
Tom Hoffman, NEDiv
Joseph Hobbs, RMDiv
Norm Floyd, MWDiv
Barb Knox, SPDiv
Gary Meeker, NPDiv
Rick Mitchell, SEDiv
Annie Christian
R. David Jones
Glen Wilhelm
Linda Rogaski-SOM Administrator
Laura Stitch-SOM Administrator
Nancy Brown-SOM Administrator

Court of Appeals
Bob Horansky - Chairman
David Nokes
Dick Templeton
JoAnne Jensen, Alt. 1
Fred Cummings, Alt. 2
Sue Roethel - Secretary

Competitor Service Center
Mike Smith, Chief

Driver Advisors
Costa Dunias
Jack Kish
Barbara McClellan

Scrutineers
Chief Scrutineer
Toni Creighton, Nat'l Administrator

TV Liaisons
Dee Duncan
Pat di Natale

Timing and Scoring
Mark Waggoner, Nat'l
Administrator
Chief Timing & Scoring
Chief of Results
Asst. Chiefs

Starters
Chief Starter
Dee Greaves, Nat'l Administrator
Asst. Chief Starter
Larry Kurkowski
Keith Pfautz

Start Judge
Rich Lorenz
Bill Johnson

Flagging & Communication
Chief Flagging
Ann Hefty, Nat'l Administrator
Asst. Chiefs Flagging

Asst. Chief Communications
Doug Johnson

Pit and Grid
Chief Grid
Gayle Lorenz, Nat'l Administrator
Chief Pit
Janet Bruce

Emergency Services
Leo Baker
Course Marshal
Ken Ragan

Medical Safety/
Chief Race Physician
Jim Butler, M.D.

Radio Tech
Nancy Foster

Sound Control
Chief Sound Control
Wayne Briggs, Nat'l Administrator
Asst. Chief Sound
Jason Briggs
E.B. Lunken

Victory Circle
Bonnie Wannarka
Geri Martinsen

Driver Information
Sue Cowan
Race Control Hospitality
Wilma Dunias

Club Racing Board
Bob Dowie - Chairman
Chris Albin
Stan Clayton
Dave Gomberg
Peter Keane
Russ McHugh
Lauri Burkons - Secretary
Jerry Wannarka - BoD Liaison
Jim Christian - BoD Liaison

Heartland Park Topeka Staff
Owners
Raymond and Nancy Irwin
Office Manager
Kim Adkins
Sales and Marketing Director
Chris Martin
Public Relations Director
Bri Paletta
Safety/Road Course Operations Manager
Ed Ozment
Operations Manager/Information Technology
Mike Casey
Facility Manager
Mike Walker
Registration/Ticketing Manager
Kathleen Casey
Emergency Dispatch
Dwight Cowan
Special Projects
Carl Lundquist

SCCA Board of Directors
Bob Introne - Area 1
Jerry Wannarka - Area 2
KP Jones - Area 3
Larry Dent -Area 4
Bob Lybarger - Area 5
Lisa Noble - Area 6
Mike Sauce - Area 7
Jim Christian - Area 8
RJ Gordy - Area 9
John Sheridan - Area 10
Andy Porterfield - Area 11
Phil Creighton- Area 12
Howard “Duck” Allen - Area 13

SCCA National Staff
President & CEO
Jim Julow
Vice President, Club Racing
Terry Ozment
Club Racing Events Manager
Wyndi McCormick
Club Racing Manager
Deanna Flanagan
Technical Services Manager
Jeremy Thoennes
Technical Assistant, Club Racing
John Bauer
Executive Assistant
Aimee Thoennes
Vice President Marketing Communications
Eric Prill
Marketing Services Manager
Melissa Flesher
Marketing/Communications Specialist
Jenny White
Public Relations Specialist
Erin Cechal
Vice President Member & Region Services
Colan Arnold
Vice President Finance
Jeff Dahnert
Manager, Region Development
Mike Dickerson
Creative Director
John Steflik
Information Technology Manager
Joel Lemon

Event Schedule

HEARTLAND PARK TOPEKA #IDC-08-S
HELD UNDER 2008
GENERAL COMPETITION RULES

QUALIFYING / MEETINGS

22 min. sessions

	MON 10/6 QUALIFYING:	TUES 10/7 QUALIFYING:	WED 10/8 QUALIFYING:	THURS 10/9 QUALIFYING:
8:00	T2	SSB	F500	SM
8:30	FM	CSR	T1	FC
9:00	EP	AS	HP	GT2
9:30	T3	FE	FF	GT3
10:00	SRF	FP	GTL	DSR
10:30	FV	FA	S2	SSC
11:00	SM	GT1	SSB	F500
11:30	FC	T2	CSR	T1
12:00	GT2	FM	AS	HP
LUNCH- CRB MTGS	F/SR	GT/SM	PROD	SS/AS TOURING
1:30	GT3	EP	FE	FF
2:00	DSR	T3	FP	GTL
2:30	SSC	SRF	FA	S2
3:00	F500	FV	GT1	SSB
3:30	T1	SM	T2	CSR
4:00	HP	FC	FM	AS
4:30	FF	GT2	EP	FE
5:00	GTL	GT3	T3	FP
5:30	S2	DSR	SRF	FA
6:00		SSC	FV	GT1

HARDSHIP SESSIONS

Please see the Chief Steward

	FRI 10/10	SAT 10/11		SUN 10/12
7:30	SESSION 1	SESSION 1	8:00	SESSION 1
7:45	SESSION 2	SESSION 2	8:15	SESSION 2

NATIONAL CHAMPIONSHIP RACES

ALL RACES 18 LAPS OR 40 MIN., WHICHEVER ELAPSES FIRST.
RACE TIMES ARE GREEN FLAG TIMES.

	FRI 10/10	SAT 10/11		SUN 10/12
8:15	T2	GT3	8:45	SSB
9:15	FM	DSR	9:45	CSR
10:15	EP	SSC	10:45	AS
11:15	T3	F500		
1:15	SRF	T1	12:45	FE
2:15	FV	HP	1:45	FP
3:15	SM	FF	2:45	FA
4:15	FC	GTL	3:45	GT1
5:15	GT2	S2		

ACTIVITY CALENDAR

Sun. 10/5
5:30 pm*
Track Walk

Mon 10/6
6:00 pm*
Welcome Party
Liebler Pavilion

Tues 10/7:
Drivers' Briefing
11-12 pm - For PM Qualifiers
1-2 pm - For AM Qualifiers
6:00 PM**
Volunteer Party
TBD

Wed 10/8:
6:00 pm**
Volunteer Party
TBD

Thurs 10/9:
6:00 pm*
VOLUNTEER OF THE YEAR PARTY
DRIVERS WELCOME!!
Liebler Pavilion

Fri 10/10:
6:00 PM**
Volunteer Party
TBD

Sat 10/11:
6:00 pm*
Participant Party
TBD

Sun 10/12:
6:00 pm**
Volunteer Party
TBD

*All times are approximate
**Volunteer Parties start @ conclusion of days events

COURT OF APPEALS

JUDGMENT OF THE COURT OF APPEALS
Steven Ott vs. SOM, COA Ref. No. 08-02-SW
April 10, 2008

PRIOR PROCEEDINGS AND FACTS IN BRIEF

At the Texas Two Step Double National Race at the Texas World Speedway (TWS) on Sunday, March 9, 2008, Chief Steward Jim Averett filed a Request for Action (RFA) against Steve Ott requesting that the Stewards of the Meeting (SOM) review Mr. Ott's attempt to qualify a car without registering or entering the event in violation of GCR Sections 2.1.2., 2.1.3., and 2.1.5. The Stewards of the Meeting, Lee Carrico and Jack Marr, Chairman, held a hearing taking testimony from witnesses Steve Ott, Jim Averett, Chief Steward; Paula Taylor, Chief Registrar; and Jeff Moore, driver of car GT-2 #32. Lee Carrico, assigned as a Safety Steward for the event, was added as an SOM for this case as Chairman Marr determined that none of the assigned SOM would be available to completely hear and adjudicate the RFA.

At the conclusion of their hearing and deliberations, the Court found Mr. Ott in violation of GCR Sections 2.1.2., 2.1.3., and 2.1.5, and suspended his competition license through December 31, 2008. Mr. Ott appealed that decision.

DATES OF THE COURT

The Court of Appeals (COA) David Nokes, Richard Templeton, and Robert Horansky, Chairman, met on March 20, April 3, and April 10, 2008 to hear, review and render a decision on the appeal.

DOCUMENTS AND OTHER EVIDENCE RECEIVED AND REVIEWED

1. Letter of Appeal from Steven Ott, which also included the participant section of Request for Action stating the SOM decision and penalty, received March 28, 2008.
2. Official Observer's Report and related documents, received March 28, 2008.
3. Supplementary Regulations for the event, received April 2, 2008.
4. E-Mail from Jack Marr, Chairman SOM for the event, received April 2, 2008.

FINDINGS

During their hearing, the SOM learned that on Saturday, March 8, 2008, driver Jeff Moore (GT-2 #32) decided that his car was not handling to his satisfaction and requested his "tech", Mr. Ott, to take it out for testing during one of the scheduled on track sessions for GT-2. That afternoon, Mr. Ott asked the Chief Steward if he could do so and was advised that he could if he registered for the event. Mr. Ott did go to registration, spoke with the Chief Registrar stating that the Chief Steward had approved this request, but did not register. The Chief Registrar advised the Chief Steward on Sunday morning of these facts. Chief Steward Averett asked Assistant Chief Steward Tom Brown to identify the driver of the car when it was brought to the grid for qualifying. Mr. Ott drove GT-2 #32 to the grid in proper driving gear and was prepared to take the car out during the session. When Mr. Brown found that the driver was Mr. Ott, he informed him that he could not take the car out on track and Mr. Ott returned to the paddock.

Mr. Ott was listed on Mr. Moore's entry form solely as the at-track emergency contact. Mr. Ott did not sign any SCCA waiver for the event. His admission to the track was based on a TWS track-issued armband received when he registered for the preceding non-SCCA track test day. Neither his membership card nor his license was made available to the race officials, although he was asked for his license by the SOM during the hearings. Neither were they presented when requested by the SOM at the time he was informed of their decision and penalty.

In his Letter of Appeal, Mr. Ott acknowledges that he was wrong in not registering for the event. However, he feels that the length of the suspension is excessive. Further, he feels that inasmuch as there were no injuries, and because he did not, in fact, enter the course, there was no harm, and, as a result, there was no foul. Finally, he questions the hearing process used by the SOM, since approximately eight Stewards heard evidence, but only two rendered the decision. He stated that he believes that it is reasonable to expect that those who hear the case should be involved in the decision.

The COA has determined that the two stewards who rendered the decision heard the entirety of the evidence and the hearing was conducted by the SOM in conformance with the GCR. Mr. Ott submitted no new or compelling evidence to substantiate his appeal.

DECISION

The Court of Appeals upholds the decision of the SOM in its entirety. Mr. Ott's competition license is suspended until December 31, 2008. In addition, the COA does not find Mr. Ott's appeal to be well founded and directs that his entire appeal fee be retained by SCCA.

SOLO EVENTS BOARD MINUTES

SEB MINUTES | *March 25, 2008*

The Solo Events Board met by conference call March 25th. Attending were SEB members Rick Myers, Dave Whitworth, Tina Reeves, Jason Isley, Steve Wynveen, Erik Strelnieks, and Ron Bauer; Lisa Noble of the BOD, and Colan Arnold,Doug Gill and Brian Harmer of the National Staff. These minutes are presented in topical order rather than the order discussed.

Unless noted otherwise the effective date for all rule, class, and listing change proposals herein is 1/1/2009.

GENERAL

- Jason Tipple will remain the Great Lakes Divisional Solo Safety Steward through 2008.
- The following rule change proposal is submitted for member comment: Replace the first sentence of 12.9 with: "The area of a wing element shall be computed by multiplying the maximum chord (straight line distance from leading edge to trailing edge) by the maximum span (width). Curvature of the element (camber) and angle of attack when mounted on the vehicle will not affect the area measurement. The area for multiple-element wings will be the sum of the individual areas of each of the elements."

STOCK

- Brian Connors has been approved as SAC Chairman, and John Stimson as SAC Secretary.

MODIFIED

- The MAC has recommended the following wording, presently found in Section 12.9, be incorporated into Section 18, in conjunction with the change to 12.9 as above: "The area of a wing shall be computed by multiplying the width and depth of the wing without regard to the curvature of the wing. Any airfoil shadowed by another airfoil with more than six inches between them will have its own projected area added to the wing area calculation. Any diffuser-type aerodynamic device under the car which is used in downforce generation is not included in the wing area calculation." Also add: "Section 12.9 does not apply."

NOT RECOMMENDED

- Stock: Steering wheel allowance changes (ref. 08-015)
- Stock: Shock bushing allowance changes (ref. 08-005)
- Stock: 997 GT3 to SS (remove from exclusion list) (ref. 08-156)
- Stock: Shock absorber access in Stock (ref. 08-018)
- Modified: FM weight and dimensional changes (ref. 08-040)

REFERRED TO COMMITTEE FOR FOLLOWUP

- SAC: Shock absorber reservoir access

TECH BULLETINS

1. General: Add the following sentence to the end of section 3.2 "Initial classification is inclusive of a new listing on an exclusion list." *Note*: it is intended that after the initial 12 month period, the formal rules season process must be followed in order to remove a car from the exclusion list and place it in a competition class.
2. Stock: the following new listings, effective immediately upon publication, have been recommended by the SAC and approved by the SEB:

Audi RS6	AS (ref. 08-138)
Mitsubishi Lancer Evolution X	AS
BMW 128i & 135i	DS
Chevrolet Malibu (all)	GS
Mini Clubman S	GS
Mini Clubman	HS
Saturn Astra	HS
Suzuki SX4 Sport	HS (ref. 08-054)

3. Stock: The SAC has recommended that the new Corvette ZR-1 be added to the Stock exclusion list. The committee has noted that the 20" wheel specification is a deciding factor, and this car will be revisited when appropriate tires become available.
4. Stock: The SAC has recommended that the new Nissan GTR be added to the Stock exclusion list. The committee has noted that the 20" wheel specification is a deciding factor, and this car will be revisited when appropriate tires become available.
5. Stock: The following listing clarifications have been recommended by the SAC and approved by the SEB:
   - Current Super Stock listing for Corvette C5 ('97+) is modified to read "Corvette C5 (all)"
   - Current Super Stock listings for C6 Corvettes are consolidated to read "Corvette C6 (non ZR1)"
   - Current A Stock listings for C4 Corvettes are consolidated to read "Corvette C4 (all)" (*Comment*: this is being done to avoid confusion between the old ZR-1 and the new ZR1)
   - Current Super Stock listing of Elise ('05+) is clarified to read "Elise N/A ('05+)"

6. Street Modified: Per the SMAC, replace 16.1.M with the following: "Front splitters are allowed and shall be installed parallel to the ground (within +/-3 degrees fore to aft) and may extend a maximum of 6 inches from the front bodywork/fascia as viewed from above. Splitters may not extend rearward past the centerline of the front wheels. No portion of the splitter may extend beyond the widest part of the front bumper/fascia as viewed from above."

2008 Solo National Championship

Heartland Park Topeka, Topeka, KS – Sep. 16-19, 2008

SR 1.5 Supplementary Regulations – pending Solo Events Board approval
"Held under the SCCA Solo Rules (SR)"

CONTENTS

A. GENERAL INFORMATION
B. REGISTRATION PROCEDURES
C. SAFETY
D. ORDER OF RUNNING
E. TECH PROCEDURES
F. IMPOUND PROCEDURES
G. PROTESTS & APPEALS
H. COURSE MARKERS
I. TIMING & SCORING
J. DRIVERS' MEETING NOTES
K. ENTRANTS AS WORKERS
L. TROPHIES
M. CLASSES
N. OFFICIAL RESULTS
O. APPENDIX A

A. GENERAL INFORMATION

1. ENTRY REQUIREMENTS: SR 4.2.
2. **National Championship entrants' access to Heartland Park Topeka (HPT) begins Thursday, September 11 at 1:30 p.m**. through Saturday, September 20 at 9:00 a.m., 24 hour access. Quiet time must be observed 10pm – 6am. HPT ordinance: Racing engines shall not be run after 10:00 p.m. or before 7:00 a.m. Courses will be open for walking starting Monday, September 15, at 8:00 a.m. Paddock assignments will begin at 10:00 a.m. but access to assigned parking begins at 1:30 p.m.
3. **ProSolo Finale entrants access to Heartland Park, Topeka (HPT) begins Thursday, September 11 at 10:00 a.m.** ProSolo competitors are allowed early access for practice starts and will receive a temporary parking location. All ProSolo entrants will be required to vacate the temporary parking location by 6:00 p.m. Thursday, September 11.
4. This event is designated a spectator event. The general public will not have access to the course, staging, and grid areas and will not be required to sign the SCCA Release and Waiver form.
5. Prior to entering all SCCA participants must sign the SCCA Release and Waiver form and obtain a wristband. Wristbands will be your credential and required for access to the facility at all times. The wristband, signifying SCCA waiver signature, will be worn either on the wrist, on a SCCA photo ID or attached to the individuals exterior clothing from the waist up on the front of the body, in plain sight. A wristband can be obtained between 6:30 a.m. and 7:00 p.m. **If you do not have a wristband, you will not be allowed access to the facility.**
6. Please see Paddock Chief in the Registration area to confirm paddock parking space. This will enable the officials to locate competitors in case of an emergency.
7. The Tire Rack SCCA Solo National Championship schedule will be published in the Driver Information Book and at www.scca.com.
8. Changes to the supplemental regulations, run/work order and/or the safety plan will be posted at registration and at the information booth. It is the responsibility of each competitor to check for, and adhere to posted changes.
9. Other site restrictions required by the site owner such as "off-limits" areas, may be published separately, or posted on site and must be obeyed.
10. Rest rooms and shower facilities will be available. Trash containers and portable toilets will be provided. Do not obstruct the portable toilets. Blocking approach to toilets will obstruct use and prevent servicing. Do not use for trash.
11. During the event, Lost and Found items may be picked up/dropped off at the INFORMATION area in the TECH Building.
12. Scales will be available to the competitors during the event free of charge. Use of scales by competitors will be restricted when they are being used by Impound. Consult with the Chief of Impound if in doubt.
13. Fuel is available for purchase through HPT. Octane's available are: 100 unleaded, 110 leaded, 112 leaded. 24 hour access via credit card payment.
14. Oil, gas, and all fluids must be disposed of in proper containers. Special oil and fluid reclamation stations will be accessible throughout the garage and paddock areas. Please observe the instructions and only pour waste oil and fluids into the appropriate containers. Should something accidentally spill, please try to minimize the situation by cleaning up the affected area immediately and notify HPT personnel.
15. Leftover tires/tire shavings and any other hazardous waste will not be abandoned at the site. The expense for disposal of identifiable tires will be billed to the owner.
16. No parking or working on cars on the roads in the paddock.
17. Do not poke holes in or otherwise damage the hard surface of the paddock and course areas for tent stakes or for any other reason. Violators may be fined and may be removed from the event. Plywood or some other similar material should be used to protect the blacktop surface when using jacks and or jack stands. Competitors should bring their own material.
18. Smoking is prohibited in any indoor facility including the Tech building.
19. **NOTE: All fees listed for site services and passes are set by HPT**. Motor home parking in the paddock: All motor homes must fit in the allowed paddock parking space. $150 fee includes overnight stay and electricity. There is no fee for motor home camping without electrical hook-ups. Water (non-potable) is available near the registration bldg. Pumping is available near the registration bldg for an additional fee. There will be no delivery of water. To reserve a spot with electrical hook up, contact HPT @ 800-437-2237. Electrical hook up spaces are very limited. Parking outside the paddock at night is free.
20. All utility vehicles (golf karts, rented or personal, motorbikes, mopeds, scooters, 2, 3 & 4 wheelers. This does not include bicycles.) must display a vehicle pass (sticker) that may be purchased at registration (check-in) for $50 (vehicle passes for handicapped persons will not be charged). The utility vehicle pass is good for the entire year. A utility vehicle is a motorized non-licensed non-registered vehicle. The sticker must be affixed to the registered vehicle along with car number and class.

No minors allowed on pit vehicles per HPT. The operation of motorized vehicles, whether gas or electric powered, such as but not limited to, golf carts and other personal transportation vehicles are limited to members that can present a valid driver's license. Drivers are reminded that Solo Rules section 9.1.c applies to golf carts, motorcycles, scooters, mini-bikes, and other forms of personal transportation.

21. Camping is allowed. Outdoor cooking is allowed, but please keep safety in mind. Fireworks are not permitted on the grounds of HPT. Please leave the grounds as you found them.

22. All parcels should be delivered to **HEARTLAND PARK TOPEKA, 7530 S. TOPEKA BLVD, TOPEKS, KS 66619** and **MUST** include name of recipient and may be picked up between the hours of 7:00 a.m. – 5:00 p.m. at the DESIGNATED SHIPPING AND RECEIVING AREA. All freight deliveries will be delivered to the maintenance building.

B. REGISTRATION PROCEDURES

1. Register on-line at http://www.scca.com, or send registrations to: SCCA, Solo Nationals Registration, P.O. Box 1833, Topeka, KS 66601-1833; phone (800) 770-2055, (785) 232-7656, fax (785) 861-1713.

2. Entries must be received by 4:00 p.m. CST, August 21, 2008 to avoid the $75 late fee. A $150 late fee will be assessed for entries received after September 5, 2008.

3. Cancellations received by 4:00p.m. CST, September 5, 2008 will receive a full refund. Cancellations received by 4:00p.m. CST, September 9, 2008 will receive a refund of half the entry fee paid. Cancellations made after September 9, 2008 will not receive a refund. Only a written withdrawal will be accepted via fax, letter or email. **No Exceptions.**

4. Registered competitors will receive tickets for both awards ceremonies. Extra tickets for Wednesday and Friday night banquets will be available with event registration or at Registration on a first come, first served basis. Those not registered for the event must purchase tickets for each awards ceremony they plan on attending. Competitors are to include the cost of any extra award ceremony tickets with their event registration. The cost will be posted on the entry form.

5. Car numbers will be issued on a first-come, first-served basis. Only one or two-digit numbers will be allowed (i.e. 0 through 99) where there is one driver in one car, in one class. Where there are two drivers in one car, in one class, the first driver must have a number 99 or lower; the second driver will be 100 plus the first driver's number (i.e. 30 and 130, 99 and 199). Second drivers must inform the registrar who the first driver of the car is to ensure correct number assignment. Drivers of the same car but in different classes may use the same car numbers. **Car owners must inform Registration or the Event Chair of the intent to run multiple classes with a single vehicle. Every effort will be made to accommodate this with the run/work order but it is not guaranteed.**

6. All competitors will receive a bar code at registration. The bar code must be placed on the left hand side of their helmet. One bar code per helmet. If you are sharing a helmet you must cover all barcodes except yours prior to arriving at the start line.

7. All drivers must bring to registration: Current valid driver's license, SCCA membership card, and Solo Rule book.

8. Minors: A minor release form must be presented at registration. Proper forms may be obtained from your local region prior to Nationals and will also be available at registration.

9. The hours of operation for registration and tech:

REGISTRATION		**TECH**	
Saturday, Sept 13	9 - 11:30 a.m. & 1 - 4:00 p.m.	Saturday Sept. 13	3:00 – 6:00 p.m.
Sunday, Sept 14	9 - 11:30 a.m. & 1 - 4:00 p.m.	Sunday, Sept. 14	7:00 a.m. -1:00 p.m.
Monday, Sept 15	8 - 11:30 a.m. & 1 - 3:00 p.m.	Monday, Sept. 15	1:00 - 4:00 p.m
Tuesday, Sept 16	7 - 8:00 a.m. & 1- 4:30p.m.	Tuesday, Sept 16	7:00 - 10:00 a.m
Wednesday, Sept 17	10- Noon & 1 - 4:30 p.m.	Wednesday, Sept 17	1:00 - 4:00 p.m.
	Thursday, Sept 18	**7:00-8:00 a.m. by appointment only**	

10. If an unforeseen delay, such as a breakdown while en-route, prevents arrival before 4:30p.m. Wednesday, contact Deena Rowland @ 1-800-770-2055 or Chief Steward to arrange on-site registration and tech.

11. SCCA members living in Canada are allowed to compete in the Canadian Automobile Sports Clubs (CASC) events in lieu of a SCCA Divisional Solo Championship or National Tour event as the prerequisite to competing in the SCCA National Solo Championship.

12. Entry is limited to 1250 competitors, based on the order of entry.

C. SAFETY

1. The safety program supporting the event is detailed in the event safety plan. A copy of this plan will be posted at registration. A copy of the plan may be obtained by contacting the National Staff or at the event information booth.

2. A speed limit of 15 MPH will be enforced at the event site including paddock and grid. Tire spins, rapid speed or direction changes, or other "abnormal/unusual" driving techniques are strictly prohibited throughout the HPT facility including the perimeter roads and the route between grid and the course. See Event Chairman for questions or problems.

3. Children and pets are allowed anywhere on the event site EXCEPT during active competition. During active competition, children under 12 and pets are not allowed in the grid, staging and course areas. Pet owners are required to keep their pets on a leash and clean up after them. HPT reserves the right to remove pets and owners that do not comply with the track regulations. Unruly or dangerous animals are not allowed at any time. You are responsible for your animal.

4. Drivers are responsible for the actions of their crew and guests. Waiver forms will be available at gate into site.

5. It is recommended that the refueling of cars in grid be accomplished with assistant and fire extinguisher.

6. Crosswalks will be designated between grid and staging. Pedestrians must give-way to cars moving to staging (start-line) and cars returning to grid from the course.

7. Course workers must be on their feet at all times while cars are competing.

8. Photographers desiring to enter a course area must be approved by the course safety steward and be accompanied by a spotter. A minor may not serve as a spotter.

9. Skate boards (motorized or manual, with or without stand-up handlebars or seat), roller blades and roller skates (motorized or manual) are prohibited from use in all areas of the event site. Intent: Skateboards, in any form, or name, with the basic function/ form of a skateboard. The Chief Safety Steward will make the determination of vehicles qualifying under this regulation. Any form of "personal transportation" must ride on pneumatic tires; and have some form of mechanical braking mechanism. Operators under the age of 16 must be seated. Special exemptions shall be granted by the Chief of Safety for any vehicle required for medical reasons. Top-heavy novelty vehicles, such as motorized bar stools, are not permitted. Final determination of vehicle eligibility, in all cases, shall be made by the Chief of Safety.

10. Pylons, tape, signs and/or other barriers will define "No Parking" areas near the course. Cars parked in such a manner that block or restrict defined driveways or entrances to course areas will be towed away without notice, at the expense of the vehicle operator/owner.

11. All incidents involving injury and/or property damage occurring on the event site, or felt associated with the event will be reported as soon as possible to the Event Chairman, Chief Steward, or Chief of Safety.

D. ORDER OF RUNNING

1. Competition will be on two successive days with one course run each day. Runs will be scheduled heats for Tuesday/Wednesday and heats for Thursday/Friday competition. (Heats will be assigned by car class). The run/work order will initially identify only the days each class will run. Heat assignments will be made once entry density and mix is known; approximately September 1, 2008. Specific run order within a heat is subject to change depending on entries. Correct run order will be posted the day of competition. In the case of extremely high or low entries, withdrawals or no shows, changes in the run/work order may be required.
2. During competition, the course will be open for walk-through only prior to the 3rd heat each day. The walk-through will be a maximum of 30 minutes. The timing captains will start the countdown clock.
3. There will be two grids for each course. Drivers are to report to the designated grid according to heat assignment found in driver's registration packet. If the car and driver are not in the specific grid spot when the first car of the heat is instructed to the start line they will lose a run/or runs depending on arrival time to grid. A diagram of the grid will be in the registration packet.
4. All drivers will be assigned a "home" space number for grid purposes where they may leave any necessary equipment (air tank, tools, etc). Grass areas surrounding grids may be used for equipment but support vehicles may be restricted from some areas. After each run all drivers will return to their "home." Do not block the access lanes between spaces. Dual Drivers will have the same grid position. All FJA and FJB competitors will be in a separate grid area.
5. The Chief of Grid shall have the discretion to determine the run order within each heat, balancing the conflicting goals of running in numerical order within class, fairness to drivers of both single-driver and two-driver, keeping entire classes together, and facilitating efficient event operation. All FJA and FJB competitors will complete their runs prior to the start of Heat 1 competition. No competitor in a class shall take a second run until all drivers in that class have completed their first run unless necessitated by reruns. After the completion of each run, vehicles must return directly to the grid. Vehicles are not permitted to depart the grid area for service. Each run of each heat is divided into two segments. Therefore, for a three (3) run heat there are six (6) segments (1a, 1b, 2a, 2b, 3a, and 3b).
6. A minimum of five minutes must have elapsed between runs for any car. This includes reruns or runs for another driver of the same car. A grid marshal will be specifically assigned to handle two-driver cars and will keep a time log to assure compliance with the five-minute minimum between runs. The time shall be measured from the time the car returns to grid until the time it leaves the start line.
7. Drivers must proceed from the grid to the start line when so directed by a grid official, or that run will be scored as a Did Not Start (DNS). Exception: Drivers of cars with mechanical difficulty shall have ten minutes after the car is scheduled to start to present a car at the start line. Drivers may take one mechanical delay per run. For this purpose, a rerun counts as a new run. Grid personnel will be notified of the mechanical difficulty, and will refer the request for a mechanical delay to the Chief Steward in cases where the competitor may gain an unfair advantage by delaying a run. Abuse of this allowance may be considered unsportsmanlike conduct and is protestable under 9.1.F.

E. TECH PROCEDURES

1. Tech inspection will be at the event site. There will be a single Tech inspection for the Test'n'Tune and Solo Nationals. Onsite Pro-Solo tech inspection will be accepted for Solo Nationals.
2. All drivers are required to state on the entry the brand of tire they run on. However, the tire brand to be used may be changed at Tech and will be verified during impound.
3. All tires, at event site and intended for use on Stock and Street Prepared category cars must be teched. These tires will be checked for compliance with 13.3.H at tech inspection; however these tires will not be marked. Tires are un-protestable for violation of section 13.3.H after the car makes its first competition run on said tire(s). There is no maximum number of tires which may be teched for each vehicle. It is the responsibility of the competitor for all additional tires acquired after tech inspection to be in compliance with tread depth and safety specifications outlined in 13.3.H. Any tire which fails tech inspection may be impounded by SCCA until the completion of competition.
4. Tech will check for compliance with 3.7 Vehicle Identification. (All required decals will be made available at tech.) Helmet bar codes are not required to complete the tech check.
5. The Tire Rack is the title sponsor for SCCA National Solo 2008, which includes the ProSolo National Series, Solo National Tour and the National Championship at Topeka. Participants in these events are required to run the title sponsor decal, which is a window decal that is to be used at the top of the windshield. Vehicles without windshields or with plastic windshields may place the decal on the front of the car. The Tire Rack SCCA Solo Nationals decal is required. This decal must be displayed on the upper half front fender between the center of the wheel opening and/or leading edge of door or just behind the leading edge of the door. For cars without fenders, decals must be on the nose and adjacent to the side number of the car. Two SCCA Solo decals (one on each side) and one SCCA decal (on the front of the car) is also required. Please make sure that both the windshield and the regular decals are in the correct location before you go to tech. Placement will be checked before the car passes tech. If you have special conditions requiring a possible alternate application for the windshield decal, please ask the National Staff.
6. Helmets must meet specifications and will be teched. Approved helmets must be teched before the driver's car can receive a tech sticker. Helmets that do not meet the requirements of the Solo rule Section 4.3.1 will be impounded by the SCCA until the completion of the event.

F. IMPOUND PROCEDURES

1. The intent of impound is to assure competitors have complied with the specifications listed in the SCCA National Solo Rules and the Supplementary Regulations for this event per Section 6.10 of the Solo Rules.
2. Vehicles will be impounded on both days of competition in the assigned grid area. The driver of each vehicle or a designated representative must remain in the grid/impound area near the vehicle during the impound period. After each competitor's last run on each day, vehicles must return to their original grid position. The Chief of Timing may request impounded vehicles to be held until the results are audited.
3. After 3rd runs, Drivers of **FJA, FJB, Street Modified, Prepared, F125,** and **Modified** category vehicles will be directed to the scales as they exit the course before they return to grid. Two driver vehicles will be weighted after the 2nd driver competes.

However, the first driver of **FJA, FJB**, **Modified** and **F125** two driver cars must be at the scales at the time the 2nd driver arrives to also be weighed. Failure to go directly to the scales after the 3rd run could result in disqualification.

4. Impound officials will inspect cars during impound and may require removing wheels and/or components as part of the inspection procedure. Competitors are responsible for performing these procedures as required and for using proper equipment (e.g. jack stands to safely support a raised vehicle). Competitors are responsible for having appropriate rules and documentation of specifications available. All vehicles required to be weighed, will be weighed both days.
5. Competitors may observe, but must not hinder Impound inspectors in any way.
6. Impound will not act on hearsay information regarding suspected non-compliant concerns provided by competitors. The decision whether to act on competitor-provided information is solely at the discretion of the Chief of Impound.
7. Vehicles under protest will remain in impound with other vehicles until the class is released. They will be escorted by a designated impound or protest committee official to another location as instructed by the Protest Committee.
8. All weights and measurements taken by impound will be available for all competitors to inspect after (not during) the weighing procedure. Competitors are reminded not to interfere with Impound officials as they work.

G. PROTEST & APPEALS: SR Rule 8

1. Protest and Appeal forms will be available from the Chief Steward, Operating Steward, Chief of Protest, Chief of Impound and the Chairman of the Appeals Committee. Protests may be filed with the Protest Committee or the Chief Steward and (except for protests from the Chief of Impound or the Chief Steward) must be accompanied by the appropriate protest fee in cash, traveler's checks or approved credit card.
2. Bonds (if required by SR 8.3.3) are due in cash, traveler's checks or approved credit card.
3. Appeals may be filed with the Chief Steward, the Chairperson of the Appeals Committee, or the Chief of Protest. The appropriate fee in cash, traveler's checks or approved credit card must accompany the Appeal (Chief Steward excepted).
4. The decisions of the Protest Committee may be appealed, but not protested. Only the original protester, protestee, or Chief Steward may file an appeal.
5. Refusal of an entrant or driver of a protested car to allow inspection under the terms established by the Protest and/or Appeals Committee(s) shall result in immediate disqualification and may result in exclusion from competing in the **2009 Tire Rack SCCA Solo National Championship**.

H. COURSE MARKERS

1. Directional pylons (pylons which are laid on their side) are for informational purposes and do not count if hit. Directional pylons placed directly adjacent to a penalty pylon must be obeyed or a DNF will result. Directional pylons not adjacent to a penalty pylon are for informational purposes only and do not result in a DNF if not followed. If a directional pylon displaces a penalty pylon, the penalty pylon will be assessed.
2. A penalty will be assessed for each displaced course entry and exit pylon.
3. The course will be lined on both sides, weather permitting. Crossing a line incurs no penalty.
4. Drivers observed driving at substantially less than normal competition speeds for the purpose of spotting slightly misplaced course markers to earn a re-run will be referred to the Operating Steward for action. Such conduct is considered unsportsmanlike and an unnecessary delay of the event.

I. TIMING & SCORING

1. The total score will consist of the best-timed run from each course, combined to create one time.
2. Scores will be posted in the designated area near each grid. See the Chief of Course or Chief Steward to resolve problems. The names of these Chiefs will be posted on the same bulletin boards as the times. THE TIMING & SCORING VEHICLES ARE OFF LIMITS FOR COMPETITORS, CREW AND SPECTATORS, unless invited to enter by an event official.
3. After the completion of each heat, times will be posted at the Information Area.
4. One bar code per helmet. If sharing a helmet, all bar codes except the one belonging to the driver at the stage lane, must be covered. Barcodes are easily covered by blue painters tape. FAILURE TO COVER EXTRA BARCODES MAY RESULT IN DISQUALIFICATION OF RUNS.

J. DRIVERS MEETING NOTES

1. There will be no drivers' meeting. Changes to the Supplemental Regulations, Safety Plan, and other items of information as well as the names of all event officials will be included in the packet of material provided at on-site registration, or posted at Registration and at the Information Booth. IT IS A COMPETITOR'S RESPONSIBILITY TO CHECK AT REGISTRATION AND THE INFORMATION AREA FOR CHANGES TO THE SUPPLEMENTAL REGULATIONS

K. ENTRANTS AS WORKERS: SR Rule 6.1

1. All competitors are required to work the event. Qualified replacements may be used as substitutes in worker assignments. However, workers must notify the Chief of Course or Chief of Specialty for approval prior to the substitution. Failure to comply with Rule 6.1 SR or properly perform assigned duties will result in additional work assignments or disqualification, as executed by the Event Officials.
2. Early work assignments that offset a normal work assignment must be pre-approved by the Event Chairman and Chief of Workers. These assignments must be extremely limited to prevent loss of critical support during the event. Serving as a volunteer prior to the event is greatly appreciated and a key element in success of this event. However, this does not automatically offset a normal work assignment.
3. The use of cell phones is prohibited while working course.
4. Worker Check-In will be located at the Information area in the TECH building. Workers will then report to their respective Chiefs (i.e., timing to Chief Timing, impound to Chief Impound) before the beginning of the last run of the heat prior to their assigned work heat for a brief instructional session and assignment. First heat workers will report at 7:30 a.m. Failure to report on time will result in an additional work assignment after the finish of the last heat on that day. Not complying with these rules will result in disqualification.

L. TROPHIES & AWARDS

1. Trophies will be awarded on Wednesday and Friday nights. They will not be mailed. If you leave the event early, appoint someone to receive your award.

2. The Event Chairman and SEB Chairman will determine awards such as the “Worker Challenge,” “Hard Luck”, “Sportsmanship”, etc., based on observations and competitor input. Nominations for these awards may be submitted at the Information Area.

M. CLASSES

1. All Open, Ladies classes as defined by the 2008 Solo Rules.
2. FSAE and FSAEL will run as a supplemental class.
3. FJA and FJB (8+ only) will run as supplemental classes.

   No other Supplemental Classes are approved for this event.

N. OFFICIAL RESULTS

1. Official results will be mailed to competitors within two weeks of the final disposition of all protests and appeals.

ROADRALLY BOARD MINUTES

RRB MINUTES | *Feb. 9, 2008*

The *RoadRally* Board (RRB) met in person on Saturday, February 9, 2008 in San Antonio, Texas.

Attending were: Kevin Poirier, Chairman, Chuck Edwards, Secretary, members Rick Beattie, Lois Van Vleet and Jim Wakemen, Jr.

Chairman Poirier called the meeting to order at 3:30 pm CST.

On motion duly made and seconded the January 2008 minutes were APPROVED.

Fees

Region sanction fees were discussed and it was proposed that after the USRRC that fees become $3.00 per car per event per 24 hour period.

National sanction fees are proposed at $10.00 per car with a minimum of $200.00 per day, $500.00 for 3 days and $100 per day after 3 days.

Championship points

To qualify for championship points in the 2009-2010 points year it is proposed that there be a 5 entry minimum.

It is proposed that regions be fined if results are not reported to the points keeper.

Determine champion consistent with rallycross & solo

It is proposed that the USRRC be a "shoot-out" wherein a national champion competitor must defend his/her points lead at the United States Road Rally Championship.

Board Liaisons

RoadRally Board liaisons for the 2008 national rally events volunteered and were appointed.

Regional events in the Arizona Border region were discussed. A warning letter will be sent to the region rally organizer and to the region executive advising them that clear efforts must be made to get the number of entries up to a reasonable and acceptable level or further sanctions will be withheld.

Next Meeting

The next meeting of the RRB will be via conference call on Wednesday, March 5, 2008 at 7:30 PM Central Time.

ROADRALLY BOARD MINUTES

RRB MINUTES | *March 5, 2008*

The *RoadRally* Board (RRB) met via conference call on Wednesday, March 5, 2008 at 7:30 PM Central Time.

Attending were: Kevin Poirier, Chairman, Chuck Edwards, Secretary, members Rick Beattie, Lois Van Vleet and Jim Wakemen, Jr. Also attending were Division Rally Stewards.

Chairman Poirier called the meeting to order at 7:30 pm CT.

On motion duly made and seconded the February 2008 minutes were APPROVED.

Division stewards to meet regularly

Jim Wakemen, Jr. introduced the division stewards and explained that regular meetings via conference call will be held. The division stewards discussed various issues that each has observed. It was noted that the issues are similar across the country.

Region events

Previous minutes have identified concerns with the regional program in a region. In addition National rallies produced by the same region raised concerns about safety. A passage control was placed on the exit ramp from an interstate highway and DIYCs were placed on an interstate causing competitors to stop on the shoulder of the interstate.

Concern was voiced because the organizer and the rallymaster have considerable experience in SCCA rallies. In addition, the inspection procedure applied by the safety steward was questioned and it was suggested that the safety steward's license should be withdrawn.

Investigation is continuing and will be discussed at the next meeting of the RRB.

Next Meeting

The next meeting of the RRB will be via conference call on Wednesday, April 2, 2008 at 7:30 PM Central Time.

ROADRALLY BOARD MINUTES

RRB MINUTES | *April 2, 2008*

The *RoadRally* Board (RRB) met via conference call on Wednesday, April 2, 2008 at 7:30 PM Central Time.

Attending were: Kevin Poirier, Chairman, Chuck Edwards, Secretary, members Rick Beattie, Lois Van Vleet and Jim Wakemen, Jr., Duck Allen, Board Liaison, and Pego Mack, National Rally Manager.

Chairman Poirier called the meeting to order at 7:36 pm CT.

On motion duly made and seconded the February 2008 minutes were APPROVED, the Town Hall, and March 2008 minutes were amended and APPROVED.

Position open on RRB

Chuck Edwards resigned from the RRB effective after the USRRC. Applicants are solicited from the SCCA rally community.

Disciplinary Review Committee
The RRB moved to form a Disciplinary Review Committee to review the actions of three members at a recent event.

Sanction fees

Revised sanction fees were adopted and will be sent to the Board of Directors for approval.

Beginning with rallies in the competition year that begins after the USRRC sanction fees will be $3.00 per car per regional event per 24 hour period, and **$10.00 per car per National event with no minimum.**

The USRRC will be $500 for a three day event. For all other regional multi-day events and National multi-day events that may offer cash awards the organizer should call the National Rally Manager, Pego Mack, at the SCCA National Office.
It was noted that the sanction fee for social events will remain unchanged and that charity events will continue to not be charged a sanction fee. The up front $10 fee will be eliminated.

Division stewards conference call

Jim Wakemen **announced the first Division Stewards** conference call will take place at 7:00 PM on April 19, 2008. The stewards will be notified and the conference call telephone number will be furnished.

Photo contest

The RRB approved the new photo contest. Rick Beattie furnished draft announcements of the contest, and SCCA members will be solicited to participate.

Rally of the Year Awards

The Gervais Award for best National Course Rally, and the National Tour Rally of the year award, are currently voted on by only those competitors who have participated in at least 4 events. The RRB voted to draft a rule change proposal requiring competitors to have participated in at least 3 events.

ROADRALLY BOARD TOWN HALL MINUTES

RRB MINUTES | *February 9, 2008*

The *RoadRally* Town Hall meeting was held on Saturday, February 9, 2008 in San Antonio, Texas.

Chairman Poirier called the meeting to order at 3:30 pm CST. The RoadRally Board was present and was introduced by Chairman Poirier.

Division RoadRally Stewards

Bruce Bettinger was recognized for his service to RoadRally and to SCCA. Bruce is retiring as Mid-West Division Steward.

Jim Wakemen, Jr. will host regular conference call meetings of Division Stewards.

Championship points structure

Weakness/strength of fields was discussed as was non-submittal of regional results.

GTA Events

GTA stands for Game, Tour, Adventure. Is this still a relevant name?

Should GTA events remain as part of the national championship?

USRRC

The Oregon region will host the 2008 event on October 17, 18, 19. **(note dates changed to Oct 31- Nov 2)**

Bids for 2009 and future years are being accepted.

It could be preferable to make the USRRC the RoadRally Championship event to align it with the way that Solo National and SCCA Racing champions are determined.

Open forum

Weekend memberships were discussed and all were reminded that the fee is per car – not per person – and is due if a car contains one or two non-members. Charity rallies do not have to pay the non-member fee.

Discussions were varied and included:

- Ways to increase attendance at events including the town hall
- Concerns that weekend memberships may reduce attendance
- Seemingly unfair practices in a region
- Enhanced roles by Division Rally Stewards

QUICK LINKS

The following items have been removed from regular inclusion in FasTrack News and can be found on SCCA's Web site at the following links:

CLUB RACING

Accredited Driver Licensing Schools: http://www.scca.com/contentpage.aspx?content=39

Forms: http://www.scca.com/contentpage.aspx?content=45

Technical Forms: http://www.scca.com/contentpage.aspx?content=74

Scrutineer's Forms: http://www.scca.com/contentpage.aspx?content=77

Vehicle Homologation Forms: http://www.scca.com/contentpage.aspx?content=79

General Competition Rules (GCR): http://www.scca.com/contentpage.aspx?content=44

SOLO

Forms: http://www.scca.com/contentpage.aspx?content=60

Rulebook: http://www.scca.com/contentpage.aspx?content=61

RALLY

Forms: http://www.scca.com/contentpage.aspx?content=49

Rulebook: http://www.scca.com/contentpage.aspx?content=50

SCCA NATIONAL CONVENTION

Event page: http://www.scca.com/event.aspx?hub=6&event=11083

EVENT CALENDAR: http://www.scca.com/events.aspx?hub=10

Fastrack news official SCCA member notification

EFFECTIVE FIRST DAY OF THE COVER MONTH UNLESS OTHERWISE NOTED June 2008

BOARD OF DIRECTORS MINUTES

BOARD OF DIRECTORS' MINUTES | SPORTS CAR CLUB OF AMERICA, INC. | *May 8-11, 2008*

The Board of Directors, Sports Car Club of America, Inc. met in Topeka, May 8, through May 11, 2008. The following members participated: R.J. Gordy, Chairman, Howard Allen, Jim Christian, Philip Creighton, Larry Dent, Bob Introne, Bob Lybarger, Lisa Noble, Andy Porterfield, Mike Sauce, John Sheridan, K.P. Jones and Jerry Wannarka. Jim Julow, President, Jeff Dahnert, Vice President of Finance, Eric Prill, Vice President Marketing and Communications, Peter Lyon, Risk Management, Howard Duncan, Vice President Rally/Solo, Colan Arnold, Vice President Membership and Region Development, Terry Ozment, Vice President Club Racing, Jeremy Thoennes Technical Services Manager, Ken Patterson, Chairman of the Stewards, Bob Dowie, Chairman, Club Racing Board, Peter Keane, Club Racing Board, also participated.

The Secretary acknowledges that these minutes are not in chronological order.

MOTION: To approve the minutes of the March 6, and April 7, 2008 meetings as amended. (Dent/Lybarger) PASSED Unanimous.

CONTENTS

BOARD OF DIRECTORS	**1**
Board of Directors Minutes	1
Club Racing Task Force Summary	6
CLUB RACING	**7**
CRB Minutes	7
Technical Bulletin	12
COURT OF APPEALS	**NONE**
SOLO	**22**
SEB Minutes	22
RALLY	**33**
RoadRally Board Minutes	33
RallyCross Board Minutes	34
QUICK LINKS	**35**

PRESIDENTS REPORT

Jim Julow reported that Club racing participation is lower than 2007, membership is rising. Time Trials, Solo and Rally are either flat or growing. He reviewed the status of a proposal to make Hall of Fame recipients life time members. He also reported on the newly initiated Jumbo Region conference call. Jim presented a report on the selection of a site for conducting future Runoffs.

FINANCE AND ADMINISTRATION

Jeff Dahnert presented a financial report as of March 2007. He presented the SCCA Inc. audited financial statement from Mize, Houser & Company for year end 2007.

SOLO/RALLY and SCCA FOUNDATION

Howard Duncan reviewed early participation trends for Solo and Rally. He reported that there will be a track sweeper available for use at the 2008 Solo Nationals.

MEMBERSHIP and REGION DEVELOPMENT

Colan Arnold reported on the effectiveness of the new membership programs. Through March 2008, the First Gear program has resulted in 616 new members. The New Member Referral program has resulted in 688 new members. 329 members converted their weekend memberships to annual memberships. He also reported on planning activities for the 2008 National Convention, and the installation of a new telephone system at the National office.

MARKETING and COMMUNICATIONS

Eric Prill presented the new World Challenge Fan Guide. He highlighted the 2008 contingency program. He also presented the results of multiple surveys relating to the Runoffs.

CLUB RACING

Jeremy Thoennes presented an update on the Spec Miata tire test plan and reported on progress with the Spec Miata compliance program.

RISK MANAGEMENT

Pete Lyon reported on the status of current litigation. He also discussed the track review program.

CLUB RACING BOARD LIAISON – Jerry Wannarka & Jim Christian

There was extensive discussion of fuel testing. Items upon which there is unanimous CRB agreement: Fuel compliance will not be treated as a special tech item; it will be handled through the standard protest/CSA mechanisms. Thus, any competitor or official may require that fuel samples be obtained and tested. An appropriate bond must be posted by both parties.

All competitors will be allowed to choose any compliant fuel (leaded or unleaded), except Showroom Stock which must use the EPA-compliant fuel specified by the manufacturer. Compliant fuel must have a dielectric constant less than 15 and it must not contain any banned substance. (The list of banned substances is being developed. It will specify the acceptable amount of such substances. These are the substances whose presence will be tested by a laboratory using Gas Chromatography.)

There is substantial agreement that leaded fuels should be sunset by 2012.

There was near-unanimous agreement that catalytic converters would not be required for cars using ethanol-blended fuels (other than Showroom Stock).

After much discussion, it was decided that penalties for the use of banned substances would be handled through the normal protest/CSA process. We would expect that the Executive Stewards would issue suggested penalties for such offenses (as they do for certain other GCR violations). The Executive Stewards might also wish to consider graduated penalties for repeated offenses (and how to track such offenses).

The CRB is considering a request to reduce required track time for Double Nationals from 90 minutes (2 X 45) to 70 minutes. This is to allow Regions additional scheduling flexibility for this type of event.

The CRB reviewed the requirements for driver suits. Allowed suits could be those with an SFI 3.2A/1 or higher certification label or FIA 8856-1986 or 8856-2000 homologation.

SOLO EVENTS BOARD LIAISON - Bob Introne, Lisa Noble, Liaison

Brian Harmer the new Solo staff has done a yeoman's job in getting member letters posted and up on the SCCA bulletin board for the SEB and committees. He will free Doug Gill of some of these time consuming tasks. The SEB is looking at more efficient ways to let members know the dispensation of their letters or where the letters are in the review process.

The SEB has scheduled their face to face on May 31st & June 1 in Kansas City as Topeka rooms are sold out for an NHRA event. BoD Liaison, Lisa Noble will attend. They will be bringing together final rule change items to send to the BoD at the September face to face meeting.

The old Solo Site Acquisition Committee name has been revised to the Solo Site Advisory Committee to better reflect their purpose; to facilitate sharing information from Regions with successful techniques in acquiring and retaining Solo sites to those Regions needing assistance. Currently, that list of tools and processes such as a site acquisition brochure and CD , letters to site owners, insurance information, success stories and much more are posted on the SCCA website under *Solo / Solo Forms / Site Acquisition Tools List or* at this link.

The Solo Site Advisory Committee will continue to participate in mini conventions and roundtables in 2008. Additional plans to give incentives to Regions who find new Solo sites may include waiving up to $200 in sanction fees which may either offset event costs or could be used as a donation to local charities or the charity of choice for the site owner are going forward as well.

The Solo Safety Committee is putting in place the processes for continuing education requirements for licensed Solo Safety Stewards. They are also starting to establish a training curriculum for license training to ensure better continuity in training. For 2009, they are also working on plans to establish a method of training Solo Safety Stewards by means of a "Webinar" process. This method will be offered to regions demonstrating the need for this special training method.

Formula Junior Kart participants will participate at the Solo Nationals this year for the first time. The goals are to increase family participation, foster camaraderie among our youngest drivers and to build a lifelong interest for the sport among them. To ease the pressure on the Formula Junior drivers, the concept of National Championship will be downplayed and no championships or jacket awards will be given. The SEB and Kart Advisory committee are working to determine the guidelines for Youth Steward license renewals as well as a monthly newsletter for Youth Stewards called Karting Corner.

Doug Gill reports that the new bar coding system used on the side of driver's helmets to identify them at the start line is working well.

SEB Chair, Tina Reeves notes that "other issues that continue to be explored and monitored are participation trends in all classes and categories, safety issues, incidents and potential trends in lapses and as always, listening to our members and molding the rules to meet the core values of our Club and program while keeping members involved in the process"

TIME TRIALS ADMINISTRATIVE COUNCIL LIAISON - Lisa Noble

TTAC has gone forward with a PDX instructor training program based on St. Louis Region's pilot ITS or Instructor Training School. The training includes classroom, on-track training and evaluation. That committee is headed by Bob Mondeshein.

The TTAC Safety Committee is working on a "How To" document for track inspections.

At their conference call on April 24th, the Council discussed ways to update and grow their program and market share by looking at their processes and investigating the ways that other sanctioning bodies conduct events.

TTAC minutes will be posted in Fastrack in the future.

EXECUTIVE STEWARDS

Ken Patterson reported on proposed revisions to the track review process.

SCCA FOUNDATION – LARRY DENT

In February we completed the printing of new brochures for the Foundation. Although intended to promote the Foundation in general, these are centered on the Street Survival program and aimed at giving the regions that will be running Street Survival programs a slick, color brochure to promote their events. We printed 10,000 and they are all here in the club office ready for distribution upon request from regions. We do need to get the word out to our regions about these so they can be utilized to the maximum, so I ask that each of the Directors take some back and make sure your regions know about them.

It was decided not to have a Foundation Board meeting at this Face to Face to reduce both the costs and the strain on the BoD members. Howard and I figure we can handle any and all needed business at this time with a conference call.

We currently have 18 regions committed to a total of 21 Street Survival events for 08 and have had 4 already completed. At this time the program seems to be gathering speed and hopefully will serve to reduce teen accidents, build regional relationships, build SCCA membership and even make a little surplus to the costs involved of running the events.

At our last BoD meeting it was decided to place a limit on the amount available to underwrite the regions that lose money, and to limit each region to guaranteeing only their first event. This was due to the possible specter of using all our money to underwrite regional programs, especially in view of one region (Ft Wayne) showing enough of a surplus on two events in 07 to contribute back $1,000 to the Foundation and keep an equal amount to underwrite the 08 programs.

We are still very interested in conducting a national car raffle. Word from the BMW club is that they already have over $100,000 on their current raffle and it is not complete yet. Our problem is that the state laws of Kansas are draconian as concerns these activities, as are the laws of Indiana. We are looking for someone living in a state with less restrictive laws to conduct a raffle in the name of the Foundation. Any suggestions on this would be appreciated.

OLD BUSINESS

MOTION: The Board recognizes that Jim Christian will not change his Region of record for purposes of competing in Southern Pacific Division. (Christian/Porterfield) PASSED Unanimous, except abstaining, Christian

NEW BUSINESS

MOTION: To accept the report of the independent auditors, of the SCCA Inc. consolidated financial position as of December 31, 2007. (Jones/Introne) PASSED, Unanimous

MOTION: That Woolf Barnato Award winners be offered a lifetime membership.
(Introne/Allen) FAILED Voting NO, Sauce, Jones, Porterfield, Lybarger, Noble, Creighton, Dent, Wannarka, Christian.

MOTION: That GCR Section 3.9.2.A be waived to allow Scott Tucker to count his two finishes in the ST class in the T1 class. (Creighton/Lybarger)

MOTION: To table the Creighton/Lybarger motion. (Introne/Jones) PASSED Unanimous

MOTION: To authorize the Vice President of Finance to make available to SCCA Pro the amount of $400,000 to be repaid to SCCA Inc. immediately upon receipt of sponsorship receivables. (Jones/Allen) PASSED Voting NO, Porterfield, Christian, Sheridan, Lybarger, Creighton, Not voting, Sauce

MOTION: To approve David Newman as the Divisional Solo Steward for NEDIV. (Wannarka/Noble) PASSED Unanimous.

MOTION: To Approve the Board of Directors for SCCA Enterprises, consisting of Andy Porterfield (Chairman), Chris Funk, R David Jones.

(Porterfield/ Lybarger) PASSED Unanimous

MOTION: To change the Operations Manual Section III.B.7 regarding the President's Cup to read " Presented at the SCCA National Convention." (Wannarka/Dent) PASSED Unanimous

MOTION: To waive the provisions of GCR Section 3.9.1.F to allow RJ Lopez (member #388660) to change his Region of record, from SEDiv to CENDiv. (Lybarger/Jones) PASSED Unanimous

MOTION: To approve the addition of the NASA Competition License in GCR Section 3.1.5 paragraph 3 effective May 9th, 2008 (Gordy Porterfield) PASSED Unanimous

MOTION: To edit the Operations Manual to reflect the creation of "The SCCA Board of Directors Worker of the year award as defined as follows.

This award, privately endowed by a member, will be given annually to the volunteer who shows the greatest commitment to SCCA Motor Sports activities. The recipient can be involved in Solo, Rally or Club Racing. This person should personify the SCCA volunteer who gives of his/her time and effort to helping organize, work in a specialty or any volunteer role necessary to a motor sports event. The award is a trip to any motor sports event anywhere with any sanctioning body. The recipient must meet the following criteria and the other obligations and conditions stated below.

1.The member must have rendered long term service working SCCA events or activities.(5 years minimum)
2. Nominations can be made by any SCCA member or SCCA staff.
3. The recipient will be chosen by the Board of Directors.
4. Members who are excluded will be, any paid staff member, current BOD member or any member who is a paid consultant to SCCA.
5. The SCCA staff shall assist with any and all arrangements and where possible the recipient should be made part of the event.
6. The total contribution over a 20 year term will be $100,000.00. Each recipient will have a maximum of $5000.00 for expenses toward their destination.
7. The award will be terminated if SCCA discontinues from its current form, or merges with another sanctioning body or does not continue under the SCCA name.
8. The Award will be called "The SCCA Board of Directors Worker of the Year" as the contributor wants that to be the name.

(Sauce/Allen) PASSED Unanimous

The following motions are related to items that were put forth by the Task Force on National Racing and the Championship Event (Runoffs).

(Note - Members are also encouraged to read the Club Racing Task Force Summary in the June Fastrack following the Board Minutes on page 6.)

MOTION: That SCCA continue to have both National and Regional racing programs. (Jones/Dent) PASSED Voting NO, Allen, Noble

MOTION: That Improved Touring classes A, B, C, S & R, that I meet the 2.5 participation rule, be made eligible for participation in the National race program. (Jones/Introne) FAILED, Voting NO, Sauce, Gordy, Porterfield, Christian, Creighton, Dent, Abstaining, Wannarka, Lybarger

MOTION: That Improved Touring continue to be restricted to Regional competition only, and that the CRB use existing procedures to develop pathways to allow IT cars to migrate to limited prep Production configuration. (Jones/Creighton) PASSED Voting No, Wannarka, Introne, Sheridan, Christian

MOTION: That the CRB use existing procedures to revise the criteria for Runoffs qualification to increase emphasis on successful race competition, and less on minimum attendance. (Christian/Sheridan) FAILED, Voting NO, Sauce, Allen, Porterfield, Dent, Introne, Creighton

MOTION: Change GCR 3.9.1.A to read Championships shall be determined annually on the basis of.....in a maximum of seven (7) National Championship races. No more than three (3) races shall be outside the Division..... Effective October 13, 2008. (Noble/Jones) PASSED Voting NO, Christian

MOTION: Change GCR Section 3.9.2 A paragraph two, to read .....finisher in at least four (4) National.....Effective October 13, 2008. (Sauce/Allen). PASSED Voting NO, Dent, Christian

MOTION: That the CRB use existing procedures to implement class consolidation of CSR with DSR, and SSB with SSC or T3, effective October 13, 2008. (Dent/Introne) PASSED Unanimous

MOTION: That the CRB use existing procedures to structure National classes in the following manner by the 2010 competition year.

SRF, SM, CSR/DSR/S2, GTL/GT3, FP/HP/GP, GT3/DP, GT2/GT3/BP, FF, T1/ST, T2, T3/SSB, SSC/SSB, FV, GT1, AS, FA/FB, FC, EP, F5, FE, FM. (Dent/Sauce) PASSED Unanimous

MOTION: That for 2009 the Runoffs consist of 23 races for all 28 classes and for 2010, 21 races for 21 classes. (Gordy/Porterfield) PASSED, Voting NO, Sauce, Sheridan, Noble, Christian

MOTION: That the top 10 classes in National Participation from the previous year have stand alone races at the 2009 Runoffs. (Dent/Introne) PASSED Voting NO, Sauce, Creighton, Noble, Christian

MOTION: That the CRB be directed to establish the Runoffs Schedule such that Tuesday through Thursday be qualifying and races on Friday through Sunday, effective for the 2009 Runoffs. (Dent/Gordy) PASSED Voting NO, Sauce, Creighton, Lybarger, Christian

MOTION: That the BOD directs the CRB to draft a nationwide weighted points structure for Runoffs eligibility. (Noble/Wannarka) FAILED, Voting NO, Sauce, Christian, Lybarger, Porterfield, Creighton

MOTION: To adjourn. (Introne/Dent) PASSED.

Respectfully submitted,

Jim Christian
Secretary

BOD/CLUB RACING TASK FORCE SUMMARY

In response to declining entries and volunteer support for both the National Racing Program and the SCCA's Championship Event (Runoffs), a Task Force was established to review these programs and make recommendations on how interest in them might be renewed. The Task Force which consisted of representatives from the Board of Directors (BoD), the Club Racing Board (CRB) and the National Staff reviewed the programs, and along with extensive member input received over several years, made its recommendations to the Board of Directors. The Board at its May 10, meeting reviewed the Task Force recommendations, accepting some and rejecting others.

The Board recognizes that change is always welcome for some and difficult for others. The Board also wants to provide member assurance that the path to be taken will be straightforward and will be stable over a reasonable period of time. For these reasons, the Board required a larger consensus, a minimum of nine votes, for approval of each item in the proposal. Moreover, the Board is committed to seeing this program through without any substantive changes for at least the next three years. A few minor points are still to be resolved, but none will have any substantive changes to the program.

In the course of the Task Force's review, a number of items were identified that could be implemented for the 2008 Runoffs. None of these items would involve eligibility or the racing program, but would seek to improve the hospitality of the event. The significant changes in the racing program included in the Task Force proposal, and agreed to by the Board, would begin with the 2009 racing season.

The Task Force report included a number of recommendations ranging from minor changes to the existing program to a major overhaul of the entire program. The Board reviewed each item being proposed and voted for or against each. The proposal to include Improved Touring (IT) in the National program generated considerable discussion. At the conclusion of this discussion, the Board voted to not include IT in the National Racing Program, but because many IT drivers support IT as a National class, the Board will task the CRB to develop a simplified path for some IT classes to progress, with necessary modifications, to the Limited Preparation National classes.

Consolidation of classes was also a key item in the report. With the current 30 National classes, not all can be accommodated in their own race because of time available at the Runoffs. In addition, opportunities for new classes such as those using biofuels and hydrogen energy sources must be made possible for the future. Consequently, the Board has agreed to a consolidation plan that would begin with the 2009 season and will result in 23 race groups. The top 10 classes with the highest participation numbers based on the 2008 results will be guaranteed their own races, and the remaining classes may experience a race combined with another class. The latter would be based on the number of entries and car compatibility. For 2010 and beyond, there will be 21 National classes and 21 races at the Runoffs.

Specific consolidations for the 2009 competition year include: CSR and DSR, and SSB will be split between SSC and T3. For the 2010 season, the present class structure will be changed to the following 21 revised classes: SM, SRF, CSR/DSR/S2, GTL/GT3, FP/GP/HP, GT3/DP, GT2/GT3/BP, FF, T1/ST, T2, T3/SSB, SSC/SSB, FV, GT1, AS, FA/FB, FC, EP, F5, FE, and FM. Obviously, competition adjustments will need to be made by the Club Racing Board for some cars to ensure parity, and some current classes will need to be split between two or more new classes to minimize competition adjustments

Beginning in 2009, in order to qualify for the Runoffs, drivers must start and finish four races, two must be in their division of record, and points may be counted from a driver's best seven finishes. Also, the week of Runoff racing will begin on Tuesday with three days for qualifying followed by three days of racing. Section 9.1.12 of the GCR will continue to be utilized to determine the retention or inclusion of the various car classes as National classes.

The Board discussed whether or not to retain the current Club Racing program which provides for the Regional and National racing structure as compared to a program that would involve "just races." The latter would involve all races being equal but having Divisional Championships, a national points system or a combination thereof to select Runoffs entrants. While a change to the traditional Regional/National race concept had some support, the Board voted it would be best for the program to retain the current system.

The Board understands that because the program entails significant changes in many areas which will directly affect many of our competitors, these changes may cause concern. Furthermore, the Board understands these concerns and will strive to make any needed transitions as smooth and painless as possible.

Once again, the Board is committed to this program, without significant changes, for the next three years.

CLUB RACING BOARD MINUTES

CLUB RACING BOARD |SPORTS CAR CLUB OF AMERICA, INC. | *April 19-20, 2008*

The Club Racing Board met face-to-face in Topeka, KS, April 19-20, 2008, and by teleconference on May 6, 2008. Participating were Bob Dowie, Chairman; Chris Albin, Stan Clayton, Dave Gomberg, Peter Keane, and Russ McHugh. Also participating were Jim Christian and Jerry Wannarka, BoD Liaisons; Howard Allen, BoD guest; Terry Ozment, Vice President of Club Racing; Jeremy Thoennes, Technical Services Manager; John Bauer, Technical Assistant Club Racing; and Lauri Burkons, CRB Secretary.

In addition to those items covered in Technical Bulletin 08-06, the following decisions were made:

PROPOSED RULE CHANGES OR CAR RECLASSIFICATIONS

The following subjects will be referred to the Board of Directors for approval. Address all comments, both for and against, to the Club Racing Board. Comments may be e-mailed to crb@scca.com.

GCR

Item 1. Effective 11/1/08: Add subsection C and D to section 3.1.2 as follows:

C. The practice sessions for both Nationals may be combined into a single session.

D. Time for the combined practice and qualifying session must be a minimum of 70 minutes

Item 2. Effective 11/1/08, change section 9.3.19.A as follows:

Driving suits that effectively cover the body from the neck to the ankles and wrists. One piece suits are highly recommended. All suits shall bear an SFI 3.2A/1 or higher certification label or FIA *8856-1986 or* 8856-2000 homologation. Underwear of fire resistant material shall be used except with suits carrying FIA standard *8856-1986 or* 8856-2000 or SFI 3-2A/5 or higher (e.g., /10, /15, /20) Certification Patch.

Item 3. Effective 11/1/08, change section 9.4.F.5 as follows:

Either an inspection hold between 3/16 and 1/4 inch diameter must be drilled in a non-critical area of the front and rear hoops, as well as one of the supplemental braces to facilitate verification of wall thickness*; or alternatively, wall thickness may be determined by non-invasive means and noted in the log book as inspected by such means.*

Change section 9.4.5.E.4.d as follows:

Either an inspection hole at least 3/16 inch diameter, but no greater than 1/4 inch diameter shall be drilled in a non-critical area of the front and rear hoop as well as one of the supplemental braces to facilitate verification of wall thickness*; or alternatively, wall thickness may be determined by non-invasive means and noted in the log book as inspected by such means.*. Formula Cars and Sports Racers with alternate roll structures are not required to have inspection holes, the wall thickness will be indicated on the back of the homologation certificate.

Formula

Item 1. Effective 11/1/08: Change the third paragraph of section 9.1.1.B.1 as follows:

It is not permitted to construct any suspension member in the form of an *asymmetrical* airfoil or to incorporate a spoiler in the construction of any suspension member. *Symmetrical streamlining of suspension members is permitted.*

Grand Touring

Item 1. Change selected portions of recommended item 3 published in the May FasTrack to read as follows:

GT3: The maximum width of the entire wing assembly (wing element, endplates, and mounting hardware) is 64.00 inches but no wider than the rear body width including fender flares.

Improved Touring

Item 1. Effective 1/1/09, reclassify the 1985-89 Toyota MR2 to ITB @ 2,525 lbs.

Production

Item 1. Effective 11/1/08, change section 9.1.5.E.11.a as follows:

The use of a fuel cell is required unless the stock fuel tank is located between the axle centerlines and within the main chassis structure (i.e. frame rails, etc.). ~~Fuel cells are required on all Production Category cars, unless the car uses a **stock** plastic (non **metal**) fuel tank which installed in its **stock** location, has the centerline of the fuel tank located between the axle **centerlines** of the car and between the frame rails.~~ When the **stock** fuel tank is retained, it must be installed in its **stock** location, **additional** retention straps and other protection can be mandated on a car-by-car basis. Fuel cell mounting, location and fuel cell or **stock** fuel tank filler cap and vents, must meet the **specifications** of the GCR section 9.3.26.

American Sedan

Item 1. Effective 11/1/08, change section 9.1.6.D.7.h as follows:

Underhood bracing on stock hoods may be modified or removed. *Fiberglass hoods, including cowl hoods up to 3 " may be used. Otherwise, the external profile of the hood shall remain stock. Ram air openings and rear openings must be blocked off to prevent passage of air.*

Showroom Stock

Item 1. Effective 11/1/08, change section 9.1.7.B as follows:

~~Cars eligible for competition in a given year are those classified by the Club Racing Board by December 31st of the previous year. The Club Racing Board may reclassify cars during their first year of competition, effective the following year. Cars classified will be approved by ARB, EPA and DOT for sale in the United States. They shall be models intended to be available to the general public for purchase.~~

~~Current model year cars will be eligible for classification consideration if they are available to the general public through the normal dealer network by March 1st of the model year.~~

~~To be considered for classification a factory workshop manual or its equivalent and a Motor Vehicle Manufacturers Association (MVMA) "Manufacturers Motor Vehicle Specifications" form or equivalent, the Official SCCA Vehicle Technical Sheet (VTS), shall be on file with the Club Racing Department. Should the factory workshop manual not be available by December 31st of the year of classification, the official SCCA VTS shall be considered sufficient for the purposes of classification and shall be supplanted by the factory workshop manual or its equivalent (See TCS Section 9.1.10.B) when it becomes available. Copies of the official SCCA VTS sheets may be acquired from the SCCA National Office Technical Department.~~

~~If the manufacturer certifies that there are no technical changes between model years of a previously classified car, the factory workshop manuals or equivalent and the Official SCCA VTS on file at the National Office shall be considered sufficient for classification and compliance purposes. The certification shall become a permanent record of the classification in the National Office Technical Department.~~

Only those cars listed each year are eligible to compete. No updating or backdating of cars, models, specifications, and/or components thereof shall be permitted. Additions and deletions of automobiles shall be at the discretion of the SCCA. ~~Automobiles sold by the Manufacturer/Distributor that are designated not for public use or cannot be licensed are not allowed in SS classes.~~ The vehicle identification number (VIN) shall correspond with the model automobile classified. VIN plates or stampings shall remain in place. There must be a minimum of two (2) VIN plates or stampings that correspond with the model automobile classified. The tenth (10) position letter of the VIN determines the model year of the car ("W" = 1998, "X" = 1999, "Y" = 2000, "1" = 2001, "2" = 2002, "3" = 2003, etc.).

Touring

Item 1. Effective 11/1/08, change section 9.1.10.C.3 as follows:

~~Cars eligible for competition in a given year are those classified by the SCCA Club Racing Board by December 31 of the previous year. Cars classified shall have been approved by the ARB, EPA, and DOT for sale in the United States, and shall be models intended to be available to the general public for purchase.~~

~~a.~~ The Club Racing Board may classify any particular model of a car, and may permit specific factory options for that car. Such options shall be listed on the Specification Line for that vehicle. No unlisted models or factory options are eligible. If no specific model or options are listed on said line, the classified car shall be the base model with no options. Converting a car delivered with an automatic transmission to a manual transmission is allowed as long as all components which differ, including, but not limited to, radiator, springs, engine management systems, final drive ratio, etc., are converted to manual transmission specification.

~~b. To be considered for Classification, a factory workshop manual and a Motor Vehicle Manufacturers Association (MVMA) "Manufacturers Motor Vehicle Specifications" form, or its equivalent, the official SCCA Vehicle Technical Sheet (VTS), shall be on file with the Club Racing Department. Should the factory workshop manual not be available by December 31st of the year of classification, the official SCCA VTS shall be considered sufficient for the purposes of classification and shall be supplanted by the factory workshop manual or its equivalent (See TCS 9.1.10.B) when it becomes available. Copies of the official SCCA VTS may be acquired by the SCCA National Office Club Racing Technical Services Department.~~

~~If the manufacturer certifies that there are no technical changes between model years of a previously classified car, the factory workshop manuals or equivalent and the official SCCA VTS on file at the National Office shall be considered sufficient for classification and compliance purposes. The certification shall become a permanent record of the classification in the National Office Club Racing Technical Services Department.~~

a ~~c~~. Only those cars listed each year are eligible to compete. Additions and/or deletions of automobiles shall be at the discretion of the SCCA.

b ~~d~~. "Special Performance" specifications from the manufacturer which go beyond those listed in the Touring Specifications book will not be considered valid. Any manufacturer determined to be supplying false specifications to competitors or to the SCCA may be advised that said specifications may be withdrawn or the eligibility of the car(s) involved shall be terminated. The Club Racing Board is authorized to implement these terminations on an immediate basis without the approval of the Board of Directors.

c e. In the case of service circulars, recalls, etc., the burden of proof of validity shall be upon the competitor.

RECOMMENDATIONS TO THE BoD

None

MEMBER ADVISORIES

None

NEW CAR CLASSIFICATIONS

GT1 – Ford Mustang bodywork (05-08)

GTL – Honda Civic bodywork (96-06)

ITR – Mazda RX8 @ 2,980 lbs (effective 1/1/09)

ITA – Dodge Neon RT & ACR (01-03)

ITA – Dodge Neon SE, ES, and SXT (00-03)

ITB – Mazda Protégé ES (99-00)

T1 – Ferrari 355 Berlinetta (1995)

T2 – Subaru WRX STI (2007)

T3 – Subaru WRX TR (2007)

REFERRED or TABLED

GCR

1. Where did the sound changes come from (Perrault). Tabled for further discussion.
2. Tech Specialty Manual (Creighton). Tabled for review and edit.

Formula/Sports Racer

CSR – Allow the MSR Formula Mazda conversion to run at 1440 lbs. and 48mm (Schumacher). Tabled for further discussion.

Improved Touring

1. ITB – Review the classification weight of the Golf 2 (Schaafsma). Tabled for further research.
2. ITB – Review the classification weight of the Capri (Childs). Tabled for further research.
3. ITB – Review the classification of the 1982 BMW 320i 1.8L (Spencer). Tabled for further research.
4. ITR – Classify the 1995 BMW M3 (Ambivero). Tabled for advisory committee discussion.
5. ITR – Classify the BMW Z4 2.5 (Sirota). Tabled for advisory committee discussion.
6. ITR – Allow V8s (Elmer). Tabled for further research.

Production

P – Classify the Fiero (Schuman). Tabled for further research.

Touring/Showroom Stock

SSB – Help the 1999-2005 Miata (3 letters). Tabled for further research.

NOT RECOMMENDED

GCR

1. Allow a multi-piece main hoop (Dietz). The specifications are adequate as written.

2. Increase the wall thickness for cars over 2700 lbs (Myers). The specifications are adequate as written.
3. Allow the track and community to decide sound levels (Stavely). Competitors need a consistent standard across the country.
4. Eliminate "qualifying" engines for F500 (Schmidt). There is no way to enforce such a rule in a class without sealed engines.

Formula/Sports Racer

FC – Allow a larger restrictor for the Zetec engine (Weitzenhof). The specs are appropriate as written,

CSR – Clarify forced induction preparation (Staff). The rules are adequate as written.

Grand Touring

1. GT – Remove or reduce the IRS weight penalty (Burke). The weight penalty is appropriate for the performance advantage.
2. GT2 – Allow the 1996 BMW E-36 1798 cc an unrestricted plenum intake manifold and a weight of 1,800 lbs (DesJardin). The car is classified appropriately.
3. GTL – Classify the Lotus Elise (Brown). Consider the Production category.
4. GTL – Remove the 50 lb weight penalty from the BLMI engines (Linn). The rule is adequate as written.

Improved Touring

IT – Allow remote reservoir shocks in IT (Seelig). Inconsistent with class philosophy.

Prepared

1. Accept Pro Racing technical inspections (Hamm). The rule is adequate as written.
2. P – Allow alternate cross members (Fuehrer). Inconsistent with the class philosophy. Replacing major structural components is not allowed.
3. P – Allow cars older than 1990 (Thompsen). The Prepared classification was created to embrace newer cars.
4. DP – Remove the 29mm SIR requirement from the Nissan SER (Crelin). The specifications are adequate as written.
5. DP – Reduce the weight of the DP cars (Valdez). Weights are appropriate as specified.

Production

1. P – Allow a Weber carburetor anywhere an auto-type side draft is permitted (LaViola). Various types of side drafts are in use.
2. EP – Classify the DARE G.4 and G.12 (Allen). The car does not meet the Production numbers required in section 9.1.5.B.3.
3. FP – Take back the 36 mm chokes and allow 3TC crankshaft with 34 mm chokes on the Toyota Corolla (Church). The committee will monitor the car's performance.
4. FP – Reduce the weight of the Toyota Corolla by 75 lbs (Church). The weight is appropriate as specified.
5. FP – Correct the Turner 1500 choke size to 34 mm (Walsh). While the Lotus shares the same engine, it has limitations in other areas.
6. HP – Remove 50-75 lbs from all HP cars (David). The CRB wishes to monitor the class at the current weights.

American Sedan

Allow alternate Edelbrock intake and GM iron heads (Bailey). Cylinder heads are currently under discussion.

Touring/Showroom Stock

1. T1 – Allow the Viper alternate gearshift (Pintaric). Inconsistent with class philosophy.
2. T2 – Allow alternate wheels and tires for the F body (Pettiford). The car is competitive as specified.
3. T2 – Allow alternate springs for the EVO (Peter). The specifications are correct as written.
4. T2 – Reclassify the Lotus to T3 (Brannon). The car is adequately classified.
5. T3 – Allow a 3.62 final drive ratio on the Z4 (Dryden). Alternative final drive ratios are not permitted.

Spec Miata

Allow 1994-97 cars 4.3:1 gear ratio and add 25 lbs (Henry). The car is competitive as specified.

Previously Addressed

Addressed in Technical Bulletin 08-05 or the May 2008 FasTrack:

GT1 – Allow weight reduction for 12 in. rotors (Jung).

No Action Required

GCR

1. Review the rollcage requirements and front down tube lengths (Stavely). We recommend gussets at all joints and the rules allow for additional tubes within the boundaries of the cage structure. Refer to sections 9.4.G.5 and 9.4.G.6.
2. Update the GCR monthly (Kumar). Thank you for your input. An updated GCR is available on the SCCA website on a quarterly basis.
3. Allow fuel sample ports in return lines (Miskoe). Thank you for your input. The proposed rule does not preclude the port being in the return line, but without adequate pressure, this location may not deliver the sample in a reasonable time.
4. Opposition to fuel rules (McAbee/Homyak). Thank you for your input.
5. Opposition to allowing the steering lock to be disabled and not removed (Dewhurst). Thank you for your input.
6. Consolidation of national classes (Zekert). Thank you for your input.
7. Address improving position on start/restart (Homyak). Thank you for your input.

Formula/Sports Racer

1. FS – Opposition to Formula First (Engler). Thank you for your input.
2. FV – Allow use of any oil or lubricants (Varacins). Thank you for your input. As the FV specifications do not address the use of lubricants, the provisions provided in GCR section 9.3.36 Oil and Oil Additives apply. (See section 1.2.4 Interpretation and Application of the GCR.)

Grand Touring

GT – Opposition to fuel injection penalty (Finch). Thank you for your input.

Improved Touring

ITR – Allow non-OEM hardtop for the S2000 (Lally). Thank you for your input. The rule allowing replacement parts is adequate.

Prepared

1. Allow alternate bodywork (Cisar). The rules recognize the cars as approved by the VTS sheet for World Challenge.
2. Change the SIR sizes and requirements for WC cars (Jones/ Wicht). The rules recognize the cars as approved by the VTS sheet for World Challenge.
3. Reduce the weight of DP cars to 2300 lbs (Jones). The rules recognize the cars as approved by the VTS sheet for World Challenge.
4. Clarify the BP weights for former WC cars. (Wicht) The rules recognize the cars as approved by the VTS sheet for World Challenge.
5. Make Prepared eligible for the Runoffs (Lux/Wilson). Thank you for your input.

Production

1. EP – Review/reclassify the Volvo 1800 E/ES (Rose). The car is classified in FP. Please clarify your request.
2. FP – Lotus input (Flesher). Thank you for your input. The CRB and advisory committee continue to work on a solution.

Touring/Showroom Stock

T/SS – Opposition to removal of hardtops (Peter). Thank you for your input.

Resumes

None

CLUB RACING TECHNICAL BULLETIN

DATE: April 19-20 & May 6, 2008
NUMBER: TB 08-06
FROM: Club Racing Board
TO: Competitors, Stewards, and Scrutineers
SUBJECT: Errors, and Omissions, Competition Adjustments, Clarifications, and Classifications.

All changes are effective 6/1/08 unless otherwise noted.

GCR

1. As approved by the BoD in this FasTrack, effective 5/9/08, change the third paragraph of section 3.1.5, p. 8, by adding to the end as follows: *NASA (Competition License).*
2. As approved by the BoD in the May FasTrack, effective 4/20/08, replace 8.1.4 with:
   8.1.4. Rules Interpretation
   To obtain a determination on the legality of a vehicle or component without filing a formal protest, a ~~competitor~~ member may request such a ruling from the Club Racing Office. The Chairman of the Stewards program will then convene a first court. The protest and appeal procedures described in sections 8.3 and 8.4 apply, except that penalties or penalty points will not be assessed in the event of a negative ruling.

   Each court (first and appeals, as applicable)) will consult the Club Racing Board for expert technical testimony. After receiving the decision of the first court, the member may do one of the following:
   - Request court of appeals review, and provide additional evidence to the court of appeals, if desired.
   - Withdraw a request for court of appeals review, if previously made

   A non-compliant ruling will be published; a compliant ruling will not be published. The fees for this service are as follows:
   First Court $125
   Appeals Court $175.
3. As approved by the BoD in the May FasTrack, effective 4/20/08, replace the last two sentences of 8.4.6 with the following: Penalties involving time, disqualification, suspension, or loss of points shall be made effective from the date of the conclusion of the event involved. If the Court of Appeals affirms a suspension penalty imposed by the first court or determines that a suspension penalty should be added, the COA will determine the date on which suspension penalty begins.
4. As approved by the BoD in the May FasTrack, effective 4/20/08, add a new item 3 in 7.4.A and renumber the remainder of 7.4.A:
3. Loss of event points 1 point
5. Correct section 9.4.B.2, p. 96, by adding a new section e. to read as follows:
e. *On cars where the rear window/bulkhead prohibits the installation of rear braces (e.g. Honda del Sol), the main hoop shall be attached to the body by plates welded to the cage and bolted to the stock shoulder harness mounting points. This installation design must incorporate a diagonal bar connecting the top of the main hoop to the lower front passenger side mounting point (Petty Bar). Alternatively, the rear window may be removed and a clear, lexan replacement installed. The rear cage braces may pass through this replacement window and through the engine cover or bodywork to allow connection to the frame or unibody. Such allowances shall be noted on the car's specification line.*
6. Change the table in section 9.4.F.2, p. 98, as follows:

GCR Vehicle Weight	Tubing Size (inches) (outer diameter x wall thickness)
Up to 1700 lbs	1.375 x .080
1701-2699 lbs	1.500 x .090
	1.625 x 0.080
2700 lbs and up	1.750 x .095
	1.625 x .120

Formula
FA

1. Section 9.1.1.A, Table 2, p. 182, change the Pro Formula Ford 2000 specs as follows: Wheel Width (in) +/- .060: (F) 8 max. (R)10 max.
2. Section 9.1.1.A.2.b, FA Engine Table, p. 179, add a new spec line AA. To read as follows: Manufacturer: Mazda, Engine Series: 13B Peripheral Port, Req'd Restrictor: 36mm SIR, Weight(lbs): metallic chassis: 1230, non-metallic chassis: 1255.

FC

1. Add to section 9.1.1.B.3.ff as follows: The use of the Fast Forward aluminum cylinder head is permitted. *The following dimensions must be maintained.*

Intake port maximum volume 70.0 cc.

Exhaust port maximum volume 52.0 cc.

Intake port surface to exhaust port surface 5.580 +/- 0.020 inches

Intake valve center line to (adjacent) intake valve center line 4.015 +/- 0.015 inches

Exhaust valve center line to (adjacent) exhaust valve center line 4.015 +/- 0.015 inches

The machine tool marks in the intake and exhaust ports must remain untouched for 0.750 inches from the respective gasket surfaces.

2. As approved by the BoD in the May FasTrack, effective 4/20/08,Change the last sentence of section 9.1.1.B.4.a as follows: ~~Camshaft timing is unrestricted~~. Required camshaft timings are as follows:

Intake centerline 116-117 degrees ATDC
Exhaust centerline 106-107 degrees BTDC

FB

1. As approved by the BoD in the May FasTrack, effective 4/20/08, change section 9.1.1.H.2.E as follows: Brackets for mounting components, such as the engine, transmission, suspension pickups, instruments, clutch and brake components, and body panels may be ~~nonferrous~~ ferrous, aluminum alloy, or magnesium alloy of any shape, and fastened to the frame in any manner.
2. As approved by the BoD in the May FasTrack, effective 4/20/08, change section 9.1.1.H.9.A as follows: All suspension components shall be of steel or ferrous material, except that hubs, hub adapters, hub carriers, bell cranks, pivot blocks, bearings and bushings, spring caps, abutment nuts, anti-roll bar links, shock absorber caps, and nuts may be aluminum alloy or magnesium alloy.

Grand Touring

GT1

1. Section 9.1.2.E.1.c, p. 264, change the Ford Mustang (99-) spec line as follows: model years 99-04.
2. *Section 9.1.2.E.1.c, p. 264, add the Ford Mustang (05-08) bodywork w/ 102" wheelbase.*

GT2

1. Cars – ACURA, p. 280, add to the RSX specs as follows: Notes: Hood bulge permitted with no openings.
2. *Cars – MAZDA, p. 286, correct the MX-5 / Miata specs to read as follows: Notes: Rotary engine setback from the front spindle centerline to the front spark plug is 4.5".*
3. *Engines – MAZDA, p. 286, correct the 12A Street Port specs by deleting the Notes in their entirety.*
4. Engines – MAZDA, p. 286, correct the 12A Street/Bridge/Peripheral Port specs by deleting the Notes in their entirety.
5. *Engines – MAZDA, p. 286, correct the 13B Street/Bridge Port specs by deleting the Notes in their entirety.*
6. *Engines – MAZDA, p. 286, correct the 13B Peripheral Port specs by deleting the Notes in their entirety.*
7. *Engines – MAZDA, p. 286, correct the Renesis specs by deleting the Notes in their entirety.*
8. *Engines – MAZDA, p. 287, correct the 20B specs by deleting the Notes in their entirety.*
9. Classify the VQ35 block w/ VQ30 crankshaft.

Add new spec line to GTCS, Engines – NISSAN, p. 289, Engine Family: VQ35 w/ VQ30 crank, Engine Type: DOHC, Bore x Stroke(mm): 95.5 x 73.3, Displ.(cc): 3150.3, Head Type: Alum, Crossflow, Valves / Cyl.: 4, Fuel Induction: 37mm SIR, Weight(lbs): 2280, Notes: Nismo cyl. head #11040RRZ30 and 11090RRZ30 allowed.

10. Classify the VQ30 block w/ VQ35 crankshaft.

Add new spec line to GTCS, Engines – NISSAN, p. 289, Engine Family: VQ30 w/ VQ35 crank, Engine Type: DOHC, Bore x Stroke(mm): 93.0 x 81.4, Displ.(cc): 3317.7, Head Type: Alum, Crossflow, Valves / Cyl.: 4, Fuel Induction: 37mm SIR, Weight(lbs): 2280, Notes: Nismo cyl. head #11040RRZ30 and 11090RRZ30 allowed.

GT3

1. Engines – ACURA, p. 296, change the K20A series engine specs to read as follows: Fuel Induction: 33mm SIR.
2. Engines – AUDI, p. 299, change the 1984cc DOHC engine specs to read as follows: Fuel Induction: 33mm SIR.
3. Engines – HONDA, p. 301, change the K20A series engines specs to read as follows: Fuel Induction: 33mm SIR.
4. Cars – MAZDA, p. 302, correct the 626 specs by adding to the specs as follows: Notes: Rotary engine setback from the front spindle centerline to the front spark plug is 4.5".
5. *Cars – MAZDA, p. 302, correct the 626 specs by adding to the specs as follows: Notes: Rotary engine setback from the front spindle centerline to the front spark plug is 4.5".*
6. *Cars – MAZDA, p. 302, correct the MX-3 specs by adding to the specs as follows: Notes: Rotary engine setback from the front spindle centerline to the front spark plug is 4.5".*
7. *Cars – MAZDA, p. 302, correct the MX-5 / Miata specs by adding to the specs as follows: Notes: Rotary engine setback from the front spindle centerline to the front spark plug is 4.5".*
8. *Cars – MAZDA, p. 302, correct the MX-5 specs by adding to the specs as follows: Notes: Rotary engine setback from the front spindle centerline to the front spark plug is 4.5".*
9. *Cars – MAZDA, p. 302, correct the MX-6 specs by adding to the specs as follows: Notes: Rotary engine setback from the front spindle centerline to the front spark plug is 4.5".*
10. Cars – MAZDA, p. 302, correct the Protégé specs by adding to the specs as follows: Notes: Rotary engine setback from the front spindle centerline to the front spark plug is 4.5".
11. Engines – MAZDA, p. 302, correct the 12A Street Port specs by deleting the Notes in their entirety.
12. Engines – MAZDA, p. 302, correct the 12A Bridge Port specs by deleting the Notes in their entirety.
13. *Engines – MAZDA, p. 302, correct the 12A Street Port specs by deleting the Notes in their entirety.*
14. *Engines – MAZDA, p. 302, correct the 12A Peripheral Port specs by deleting the Notes in their entirety.*
15. *Engines – MAZDA, p. 302, correct the 13B Street Port specs by deleting the Notes in their entirety.*
16. *Engines – MAZDA, p. 302, correct the 13B Bridge/Peripheral Port specs by deleting the Notes in their entirety.*
17. *Engines – MAZDA, p. 302, correct the Renesis Street Port specs by deleting the Notes in their entirety.*
18. *Engines – MAZDA, p. 302, correct the Renesis Bridge/peripheral Port specs by deleting the Notes in their entirety.*

19. Engines – MAZDA, p. 302, change the MZR 1999cc engine specs to read as follows: Fuel Induction: 33mm SIR.
20. Engines – MAZDA, p. 302, change the 2189cc engine specs to read as follows: Fuel Induction: (2) auto-type w/ 38mm choke(s), Weight(lbs): 1980.
21. Engines – NISSAN, p. 307, change the SR20DE/VE series engine specs to read as follows: Fuel Induction: 33mm SIR.
22. Engines – PORSCHE, p. 307, change the 1968cc engine specs to read as follows: Notes: Intake manifold: #021-129-705R. Cylinder barrels may be of alternate material. Alt. head: Type 1/Type 3. OEM 2-valve air cooled heads may be modified to utilize two (2) spark plugs per cylinder.
23. Engines – SAAB, p. 308, change the 1985cc DOHC engine specs to read as follows: Fuel Induction: 33mm SIR.
24. Engines – TOYOTA, classified in TB 08-03, change the 7AFE series engine specs to read as follows: Fuel Induction: 33mm SIR.
25. Engines – VOLKSWAGEN, p. 310, change the 1984cc DOHC engine specs to read as follows: Fuel Induction: 33mm SIR.

GTL

1. Classify the 96-06 Honda Civic in GTL.

Add new spec line to GTCS, p. 317, Cars – HONDA, Model: Civic, Years: 96-06, Body Style: 2dr, Driveline: FWD, Wheelbase(in): 103.2, Notes: Hood bulge permitted, no openings.

Improved Touring

ITA

1. Classify the 01-03 Dodge/Plymouth Neon RT & ACR in ITA.

Add new spec line to ITCS, p. 353, Dodge/Plymouth Neon RT & ACR (01-03), Engine Type: 4 Cyl SOHC, Bore x Stroke(mm) / Displ.(cc): 87.5 x 83.0 / 1995, Valves IN & EX(mm): (I)34.9 (E)28.5, Comp. Ratio: 9.8, Wheelbase(in): 103.0, Wheel Dia.(in): 15, Gear Ratios: 3.50, 1.95, 1.36, 0.97, 0.81, Brakes Std.(mm): (F)257 Vented Disc (R)270 Solid Disc, Weight(lbs): 2780.

2. Classify the 00-03 Dodge/Plymouth Neon incl. SE, ES, & SXT in ITA.

Add new spec line to ITCS, p. 353, Dodge/Plymouth Neon incl. SE, ES, & SXT (00-03), Engine Type: 4 Cyl SOHC, Bore x Stroke(mm) / Displ.(cc): 87.5 x 83.0 / 1995, Valves IN & EX(mm): (I)33.4 (E)28.8, Comp. Ratio: 9.3, Wheelbase(in): 103.0, Wheel Dia.(in): 14, Gear Ratios: 3.50, 1.95, 1.36, 0.97, 0.81, Brakes Std.(mm): (F)257 Vented Disc (R)270 Solid Disc, Weight(lbs): 2440.

ITB

1. Classify the 99-00 Mazda Protégé ES in ITB.

Add new spec line to ITCS, p. 363, Mazda Protégé ES (99-00), Engine Type: 4 Cyl DOHC, Bore x Stroke(mm) / Displ.(cc): 83.0 xx 85.0 / 1839, Valves IN & EX(mm): (I)31.5 (E)27.6, Comp. Ratio: 9.1, Wheelbase(in): 102.8, Wheel Dia.(in): 15, Gear Ratios: 3.42, 1.84, 1.29, 1.03, 0.78, Brakes Std.(mm): (F)258 Vented Disc (R)200 Drum, Weight(lbs): 2645.

Production

EP

1. Classify the Elva Courier Mk I, II, & III 1622 & 1798 in EP with Level 1 prep.

Add new spec line to PCS-B, p. 418-419, Elva Courier Mk I, II, & III 1622 & 1798, Prep. Level: 1, Weight(lbs): 1622cc: 1530, 1798cc: 1630, Engine Type: 4 Cyl OHV, Bore x Stroke(mm): 76.2 x 88.9, 80.3 x 88.9, Displ.(cc): 1622, 1798, Block Mat'l: Iron, Head Mat'l: Iron, Valves IN & EX(mm): (I)39.9 (E)34.3, Carb. No. & Type: (2) 1.75" SU or Stromberg, Wheelbase(mm): 2286, Track (F&R)(in): 53.5 / 54.6, Wheels(max): 14 x 6 (1622cc) 15 x 7 (Mk III 1798cc), Trans. Speeds: 4, Brakes Std.(mm): (F)229 Drum (R)203 Drum, Brakes Alt.(mm): (F)229 Disc (R)254 Drum (w/ MGA axle) (F)279 Disc (R)Mk. 4T 229, Notes: ATB 7224 MGA axle housing assy., Only the Mk III 1622cc is allowed to update to the 1798cc engine including the 15" wheel. A Mk III making this update may use the 13" wheels.

2. Classify the Elva Courier Mk III, IV 1800 & Mk IV R & C in EP with Level 1 prep.

Add new spec line to PCS-B, p. 420-421, Elva Courier Mk III, IV 1800 & Mk IV R & C, Prep. Level: 1, Weight(lbs): 1630, Engine Type: 4 Cyl OHV, Bore x Stroke(mm): 80.3 x 88.9, Displ.(cc): 1798, Block Mat'l: Iron, Head Mat'l: Iron, Valves IN & EX(mm): (I)39.9 (E)34.3, Carb. No. & Type: (2) 1.75" SU or Stromberg, Wheelbase(mm): 2286, Track (F&R)(in): 53.5 / 54.6, Wheels(max): 15 x 7, Trans. Speeds: 4, Brakes Std.(mm): (F)229 Drum (R)203 Drum, Brakes Alt.(mm): (F)229 Disc (R)254 Drum (w/ MGA axle) (F)279 Disc (R)Mk. 4T 229, Notes: Mk IV T R&C have IRS, Mk III & IV 1800 have live axle. ATB 7224 MGA axle housing assy.

3. Honda S2000 (00-03), classified in TB 08-03, change the specs to read as follows: Wheels(max): 16 x 7.5.
4. Toyota MR-2, p. 428-429, add to the specs as follows: Notes: Can use stock fuel tank.
5. Volkswagen Golf GTI (87-89), p. 430-431, add to the specs as follows: Notes: Can use stock fuel tank if stock rear bumper and bumper support structure is retained.

FP

1. Nissan/Datsun SPL 311/311-U, p. 440-441, change the specs to read as follows: Carb. No. & Type: (2) auto type side draft 45mm max throttle bore w/ 38mm choke(s) on I.R. manifold.
2. Porsche 914-4, p. 440-441, change the specs to read as follows: Weight(lbs): 1970.
3. Classify the 76-84 Porsche 924 with level 2 prep in FP.

Add new spec line to PCS-B, p. 440-441, Porsche 924 (76-84), Prep. Level: 2, Weight(lbs): 2200 *2255 **2310, Engine Type: 4 Cyl SOHC, Bore x Stroke(mm): 86.5 x 84.4, Displ.(cc): 1984, Block Mat'l: Iron, Head Mat'l: Alum, Valves IN & EX(mm): (I)40.0 (E)33.0, Carb. No. & Type: Fuel Injection, Wheelbase(mm): 2400, Track (F/R)(mm): 1420 / 1392, Wheels(max): 15 x 7, Trans. Speeds: 5, Brakes Std.(mm): (F)282 Vented Discs (R)290 Solid Disc, Notes: Comp. Ratio limited to 10.5:1, Valve lift limited to .500".

Note: This car was included in the 2007 Prod car drop list.

4. Toyota MR-2 1.6l (85-89), p. 442-443, add to the specs as follows: Notes: Can use stock fuel tank.
5. Volkswagen Golf 1.8 (85-92), p. 442-443, add to the specs as follows: Notes: Can use stock fuel tank if stock rear bumper and bumper support structure is retained.

6. Volkswagen Jetta 1.8 (85-92), p. 442-443, add to the specs as follows: Notes: Can use stock fuel tank if stock rear bumper and bumper support structure is retained.

GP

1. Volkswagen Jetta 1780 (85-91), p. 452-453, add to the specs as follows: Notes: Can use stock fuel tank if stock rear bumper and bumper support structure is retained.
2. Volkswagen Golf (GTI, GT, GT), p. 452-453, add to the specs as follows: Notes: Can use stock fuel tank if stock rear bumper and bumper support structure is retained.

HP

1. BLMI Austin/Morris Mini Cooper (level 1 suspension/level 2 engine), p. 454-455, add to the specs as follows: Valves IN & EX(in): (I)1.406 (E)1.219.
2. Nissan/Datsun PL510, p. 458-459, add to the specs as follows: Notes: (2) auto type side drafts w/ 30mm choke(s) allowed @ 2050 (*2101 **2153).
3. Volkswagen Golf (GTI, GT, GT), p. 460-461, add to the specs as follows: Notes: Can use stock fuel tank if stock rear bumper and bumper support structure is retained.
4. Volkswagen Jetta 1780 (85-91), p. 460-461, add to the specs as follows: Notes: Can use stock fuel tank if stock rear bumper and bumper support structure is retained.

American Sedan

1. The AS advisory committee presents the following revision to the AS Specification Table. This new table replaces those previously published and includes the classification of additional T2 cars into AS. The committee has also approved the use of fiberglass hoods for the Mustang as reflected below.

AS	Wheel-base (inch)	Gear Ratios (Std.)	Gear Ratios (alt.)	Gear Ratios (alt.)	Brakes (Max) (in/mm)	Weight (lbs)	Notes:
Cadillac CTS-V (04-05) Restricted Prep.	113.4	2.97, 2.07, 1.43,1.00, 0.84, 0.56			(F) 355 Vented Disc (R) 365 Vented Disc	3940	Cars shall be prepared to ASCS except that engines and transmissions/final drives must comply with TCS sections 9.1.10.D, 9.1.10.D.1, 9.1.10.D.4. Exhaust systems may be modified per ASCS specifications except OEM manifolds must be maintained. OEM engine/transmission mounts must be maintained. OEM accessory drives must be maintained, except for removal of Air Conditioning Compressors and Supplemental A.I.R. pumps. Shorter drive belts and/or idler pulleys may be utilized. OEM overbore replacement pistons may be utilized. ABS brake systems must be disabled by disconnecting a front wheel speed sensor. An additional rear brake proportioning valve may be added. Factory fuel tanks may be utilized until Dec 31st 2009 unless specifically allowed. Roll cages in existing cars must meet or exceed 2003 TCS specifications. Newly constructed cars must meet ASCS roll cage requirements. A .060 in. thick SIR may be added to maintain performance parity within the class. Max. Tire Size: 275, Max. Wheel Size: 18 x 9.5.
Cadillac CTS-V (06-07) Restricted Prep.	113.4	2.97, 2.07, 1.43, 1.00, 0.84, 0.56			(F) 355 Vented Disc (R) 365 Vented Disc	3990	Cars shall be prepared to ASCS except that engines and transmissions/final drives must comply with TCS sections 9.1.10.D, 9.1.10.D.1, 9.1.10.D.4. Exhaust systems may be modified per ASCS specifications except OEM manifolds must be maintained. OEM engine/transmission mounts must be maintained. OEM accessory drives must be maintained, except for removal of Air Conditioning Compressors and Supplemental A.I.R. pumps. Shorter drive belts and/or idler pulleys may be utilized. OEM overbore replacement pistons may be utilized. ABS brake systems must be disabled by disconnecting a front wheel speed sensor. An additional rear brake proportioning valve may be added. Factory fuel tanks may be utilized until Dec 31st 2009 unless specifically allowed. Roll cages in existing cars must meet or exceed 2003 TCS specifications. Newly constructed cars must meet ASCS roll cage requirements. A .060 in. thick SIR may be added to maintain performance parity within the class. Max. Tire Size: 275, Max. Wheel Size: 18 x 9.5.
Camaro & Firebird (82-92)	101.0	3.42, 2.28, 1.45, 1.00	2.95, 1.94, 1.34, 1.00, 0.73	3.35, 1.93, 1.29, 1.00, 0.61	12.2 x 1.25 Disc	3280 Over 313 CID 3580	Dana 44 axle permitted. Harwood fiberglass hood (P/N 12100) is permitted. Engine built to A/S Build Sheet specifications with the following: Head Casting #'s: 14101081, 14014416 Port Volume (Max.): 081 casting: 170.00 cc IN/65.00 EX; 416 Casting 168.00cc IN/60.00 EX
Camaro & Firebird (93-02)	101.1	2.95, 1.94, 1.34, 1.00, 0.73	3.35, 1.93, 1.29, 1.00, 0.61		12.2 x 1.25 Disc	3280 Over 313 CID 3580	Dana 44 axle permitted. Alt Hood: American Sports Car Design, Inc. (Part # S-400) w/rear opening closed. Right side wiper mechanism may be removed and underside of cowl may be modified to facilitate carb installation. P/S bracket may be modified or replaced to accomodate the P/S pump. The cowl and shock tower sheet metal may be modified to allow the installation of an 82-92 F-body brake booster and master cylinder. Camaro SS hood from SLP or SVD is permitted with ram air opening sealed to prevent the passage of air. Engine/transmission installation procedure as provided by SCCA Club Racing shall be utilized. WS6 hood is permitted with ram air opening sealed to prevent the passage of air. Engine built to A/S Build Sheet specifications with the following: Head Casting #'s: 14101081, 14014416 Port Volume (Max.): 081 casting: 170.00 cc IN/65.00 EX; 416 Casting 168.00cc IN/60.00 EX
Camaro & Firebird (93-97) Restricted Prep.	101.1	2.97, 2.07, 1.43, 1.00, 0.80, 0.62			12.2 x 1.25 Disc	3580	Cars shall be prepared to ASCS except that engines and transmissions/final drives must comply with TCS sections 9.1.10.D, 9.1.10.D.1, 9.1.10.D.4. Exhaust systems may be modified per ASCS specifications except OEM manifolds must be maintained. OEM engine/transmission mounts must be maintained. OEM accessory drives must be maintained, except for removal of Air Conditioning Compressors and Supplemental A.I.R. pumps. Shorter drive belts and/or idler pulleys may be utilized. OEM overbore replacement pistons may be utilized. ABS brake systems must be disabled by disconnecting a front wheel speed sensor. An additional rear brake proportioning valve may be added. Factory fuel tanks may be utilized until Dec 31st 2009 unless specifically allowed. Roll cages in existing cars must meet or exceed 2003 TCS specifications. Newly constructed cars must meet ASCS roll cage requirements. A .060 in. thick SIR may be added to maintain performance parity within the class. Max. Tire Size: 275, Max. Wheel Size: 16 x 8.

AS	Wheel-base (inch)	Gear Ratios (Std.)	Gear Ratios (alt.)	Gear Ratios (alt.)	Brakes (Max) (in/mm)	Weight (lbs)	Notes:
Camaro & Firebird (98-02) Restricted Prep.	101.1	2.66, 1.78, 1.30, 1.00, 0.74			12.2 x 1.25 Disc	3680	Cars shall be prepared to ASCS except that engines and transmissions/final drives must comply with TCS sections 9.1.10.D, 9.1.10.D.1, 9.1.10.D.4. Exhaust systems may be modified per ASCS specifications except OEM manifolds must be maintained. OEM engine/transmission mounts must be maintained. OEM accessory drives must be maintained, except for removal of Air Conditioning Compressors and Supplemental A.I.R. pumps. Shorter drive belts and/or idler pulleys may be utilized. OEM overbore replacement pistons may be utilized. ABS brake systems must be disabled by disconnecting a front wheel speed sensor. An additional rear brake proportioning valve may be added. Factory fuel tanks may be utilized until Dec 31st 2009 unless specifically allowed. Roll cages in existing cars must meet or exceed 2003 TCS specifications. Newly constructed cars must meet ASCS roll cage requirements. A .060 in. thick SIR may be added to maintain performance parity within the class. Max. Tire Size: 275, Max. Wheel Size: 16 x 8.
Mustang Incl. Cobra & Cobra R (79-93)	100.4	3.07, 1.72, 1.00, 0.70	2.95, 1.94, 1.34, 1.00, 0.63	3.35, 1.99, 1.33, 1.00, 0.68	12.2 x 1.25 Disc	3080 Over 313 CID 3580	Permitted: Rear disc brake kit (M-2300-C) and/or 5-lug kit (M-2300-F). Engine built to A/S Build Sheet specifications with the following: Head Casting #'s: F3ZE-AA (GT40), F1ZE-AA (GT-40), F77E-AA (GT-40P) Port Volume (Max.): 143.00cc IN/54.00cc EX (GT-40 & GT-40P) Fiberglass hoods, including cowl hoods up to 3 " may be used. Otherwise, the external profile of the hood shall remain stock. Ram air openings and rear openings must be blocked off to prevent passage of air.
Mustang Incl. Cobra thru 95 (94-98)	101.3	2.95, 1.94, 1.34, 1.00, 0.63	3.35, 1.99, 1.33, 1.00, 0.68		12.2 x 1.25 Disc	3280 Over 313 CID 3580	Cobra R hood (F5ZV-16612-AA) is permitted with rear opening closed off. Hydro boost braking system is not permitted. Any 1994, and up, Mustang vacuum assisted braking system shall be used. Engine built to A/S Build Sheet specifications with the following: Head Casting #'s: F3ZE-AA (GT40), F1ZE-AA (GT-40), F77E-AA (GT-40P) Port Volume (Max.): 143.00cc IN/54.00cc EX (GT-40 & GT-40P) Fiberglass hoods, including cowl hoods up to 3 " may be used. Otherwise, the external profile of the hood shall remain stock. Ram air openings and rear openings must be blocked off to prevent passage of air.
Mustang Cobra (94-95) Restricted Prep.	101.3	3.35, 1.99, 1.33, 1.00, 0.68			(F) 330 Vented Disc (R) 296 Vented Disc	3580	Cars shall be prepared to ASCS except that engines and transmissions/final drives must comply with TCS sections 9.1.10.D, 9.1.10.D.1, 9.1.10.D.4. Exhaust systems may be modified per ASCS specifications except OEM manifolds must be maintained. OEM engine/transmission mounts must be maintained. OEM accessory drives must be maintained, except for removal of Air Conditioning Compressors and Supplemental A.I.R. pumps. Shorter drive belts and/or idler pulleys may be utilized. OEM overbore replacement pistons may be utilized. ABS brake systems must be disabled by disconnecting a front wheel speed sensor. An additional rear brake proportioning valve may be added. Factory fuel tanks may be utilized until Dec 31st 2009 unless specifically allowed. Roll cages in existing cars must meet or exceed 2003 TCS specifications. Newly constructed cars must meet ASCS roll cage requirements. A .060 in. thick SIR may be added to maintain performance parity within the class. Max. Tire Size: 275, Max. Wheel Size: 17 x 9.
Mustang Cobra R (1995) Restricted Prep.	101.3	3.27, 1.98, 1.34, 1.00, 0.68			(F) 330 Vented Disc (R) 296 Vented Disc	3680	Cars shall be prepared to ASCS except that engines and transmissions/final drives must comply with TCS sections 9.1.10.D, 9.1.10.D.1, 9.1.10.D.4. Exhaust systems may be modified per ASCS specifications except OEM manifolds must be maintained. OEM engine/transmission mounts must be maintained. OEM accessory drives must be maintained, except for removal of Air Conditioning Compressors and Supplemental A.I.R. pumps. Shorter drive belts and/or idler pulleys may be utilized. OEM overbore replacement pistons may be utilized. ABS brake systems must be disabled by disconnecting a front wheel speed sensor. An additional rear brake proportioning valve may be added. Factory fuel tanks may be utilized until Dec 31st 2009 unless specifically allowed. Roll cages in existing cars must meet or exceed 2003 TCS specifications. Newly constructed cars must meet ASCS roll cage requirements. A .060 in. thick SIR may be added to maintain performance parity within the class. Max. Tire Size: 275, Max. Wheel Size: (F)17 x 9 (R)17x10.

AS	Wheel-base (inch)	Gear Ratios (Std.)	Gear Ratios (alt.)	Gear Ratios (alt.)	Brakes (Max) (in/mm)	Weight (lbs)	Notes:
Mustang Cobra (96-98) Restricted Prep.	101.3	3.37, 1.99, 1.33, 1.00, 0.67			(F) 330 Vented Disc (R) 296 Vented Disc	3480	Cars shall be prepared to ASCS except that engines and transmissions/final drives must comply with TCS sections 9.1.10.D, 9.1.10.D.1, 9.1.10.D.4. Exhaust systems may be modified per ASCS specifications except OEM manifolds must be maintained. OEM engine/transmission mounts must be maintained. OEM accessory drives must be maintained, except for removal of Air Conditioning Compressors and Supplemental A.I.R. pumps. Shorter drive belts and/or idler pulleys may be utilized. OEM overbore replacement pistons may be utilized. ABS brake systems must be disabled by disconnecting a front wheel speed sensor. An additional rear brake proportioning valve may be added. Factory fuel tanks may be utilized until Dec 31st 2009 unless specifically allowed. Roll cages in existing cars must meet or exceed 2003 TCS specifications. Newly constructed cars must meet ASCS roll cage requirements. A .060 in. thick SIR may be added to maintain performance parity within the class. Max. Tire Size: 275, Max. Wheel Size:17 x 9.
Mustang Cobra (99-02) Restricted Prep.	101.3	3.37, 1.99, 1.33, 1.00, 0.68			(F) 330 Vented Disc (R) 296 Vented Disc	3680	Cars shall be prepared to ASCS except that engines and transmissions/final drives must comply with TCS sections 9.1.10.D, 9.1.10.D.1, 9.1.10.D.4. Exhaust systems may be modified per ASCS specifications except OEM manifolds must be maintained. OEM engine/transmission mounts must be maintained. OEM accessory drives must be maintained, except for removal of Air Conditioning Compressors and Supplemental A.I.R. pumps. Shorter drive belts and/or idler pulleys may be utilized. OEM overbore replacement pistons may be utilized. ABS brake systems must be disabled by disconnecting a front wheel speed sensor. An additional rear brake proportioning valve may be added. Factory fuel tanks may be utilized until Dec 31st 2009 unless specifically allowed. Roll cages in existing cars must meet or exceed 2003 TCS specifications. Newly constructed cars must meet ASCS roll cage requirements. A .060 in. thick SIR may be added to maintain performance parity within the class. Max. Tire Size: 275, Max. Wheel Size: 17 x 9.
Mustang Incl. Cobra (99-04)	101.3	2.95, 1.94, 1.34, 1.00, 0.63	3.35, 1.99, 1.33, 1.00, 0.68		12.2 x 1.25 Disc	3280 Over 313 CID 3580	Cobra R bodywork and independent rear suspension not permitted. '94-'95 Mustang K-mamber may be used to facilitate installation of 302 engine. Under no circumstances is the '99-'00 K-member to be modified. Hydro boost braking system is not permitted. Any 1994, and up, Mustang vacuum assisted braking system shall be used. Engine built to A/S Build Sheet specifications with the following: Head Casting #'s: F3ZE-AA (GT40), F1ZE-AA (GT-40), F77E-AA (GT-40P) Port Volume (Max.): 143.00cc IN/54.00cc EX (GT-40 & GT-40P) Fiberglass hoods, including cowl hoods up to 3 " may be used. Otherwise, the external profile of the hood shall remain stock. Ram air openings and rear openings must be blocked off to prevent passage of air.
Mustang Mach 1 (03-04) Restricted Prep.	101.3	3.38, 2.00, 162, 1.27, 1.00, 0.79			(F) 330 Vented Disc (R) 296 Vented Disc	3480	Cars shall be prepared to ASCS except that engines and transmissions/final drives must comply with TCS sections 9.1.10.D, 9.1.10.D.1, 9.1.10.D.4. Exhaust systems may be modified per ASCS specifications except OEM manifolds must be maintained. OEM engine/transmission mounts must be maintained. OEM accessory drives must be maintained, except for removal of Air Conditioning Compressors and Supplemental A.I.R. pumps. Shorter drive belts and/or idler pulleys may be utilized. OEM overbore replacement pistons may be utilized. ABS brake systems must be disabled by disconnecting a front wheel speed sensor. An additional rear brake proportioning valve may be added. Factory fuel tanks may be utilized until Dec 31st 2009 unless specifically allowed. Roll cages in existing cars must meet or exceed 2003 TCS specifications. Newly constructed cars must meet ASCS roll cage requirements. A .060 in. thick SIR may be added to maintain performance parity within the class. Max. Tire Size: 275, Max. Wheel Size: 17 x 9.

AS	Wheel-base (inch)	Gear Ratios (Std.)	Gear Ratios (alt.)	Gear Ratios (alt.)	Brakes (Max) (in/mm)	Weight (lbs)	Notes:
Mustang GT (2005)	107.1	3.38, 2.00, 1.32, 1.00, 0.68	2.95, 1.94, 1.34, 1.00, 0.63		12.2 x 1.25 Disc	3280 Over 313 CID 3580	Engine/transmission installation procedure as provided by SCCA Club Racing shall be utilized. Engine built to A/S Build Sheet specifications with the following: Head Casting #'s: F3ZE-AA (GT40), F1ZE-AA (GT-40), F77E-AA (GT-40P) Port Volume (Max.): 143.00cc IN/54.00cc EX (GT-40 & GT-40P) Fiberglass hoods, including cowl hoods up to 3 " may be used. Otherwise, the external profile of the hood shall remain stock. Ram air openings and rear openings must be blocked off to prevent passage of air.
Mustang Coupe GT (05-07) Restricted Prep.	107.1	3.38, 2.00, 1.32, 1.00, 0.68			(F) 335 Vented Disc (R) 300 Vented Disc	3480	Cars shall be prepared to ASCS except that engines and transmissions/final drives must comply with TCS sections 9.1.10.D, 9.1.10.D.1, 9.1.10.D.4. Exhaust systems may be modified per ASCS specifications except OEM manifolds must be maintained. OEM engine/transmission mounts must be maintained. OEM accessory drives must be maintained, except for removal of Air Conditioning Compressors and Supplemental A.I.R. pumps. Shorter drive belts and/or idler pulleys may be utilized. OEM overbore replacement pistons may be utilized. ABS brake systems must be disabled by disconnecting a front wheel speed sensor. An additional rear brake proportioning valve may be added. Factory fuel tanks may be utilized until Dec 31st 2009 unless specifically allowed. Roll cages in existing cars must meet or exceed 2003 TCS specifications. Newly constructed cars must meet ASCS roll cage requirements. A .060 in. thick SIR may be added to maintain performance parity within the class. Max. Tire Size: 275, Max. Wheel Size: 17 x 9.
Capri (79-86)	100.4	3.07, 1.72, 1.00, 0.70	2.95, 1.94, 1.34, 1.00, 0.63	3.35, 1.99, 1.33, 1.00, 0.68	12.2 x 1.25 Disc	3080 Over 313 CID 3580	Permitted: Rear disc brake kit (M-2300-C) and/or 5-lug kit (M-2300-F). Engine built to A/S Build Sheet specifications with the following: Head Casting #'s: F3ZE-AA (GT40), F1ZE-AA (GT-40), F77E-AA (GT-40P) Port Volume (Max.): 143.00cc IN/54.00cc EX (GT-40 & GT-40P) Fiberglass hoods, including cowl hoods up to 3 " may be used. Otherwise, the external profile of the hood shall remain stock. Ram air openings and rear openings must be blocked off to prevent passage of air.
GTO (04-06)	109.8	2.95, 1.94, 1.34, 1.00, 0.73	3.35, 1.93, 1.29, 1.00, 0.61		12.2 x 1.25 Disc	3480 Over 313 CID 3680	Engine/Transmission installation procedure as provided by SCCA Club Racing shall be utilized (TBD). Production IRS allowed w/ a maximum camber of -0.5° at static ride height. Engine built to A/S Build Sheet specifications with the following: Head Casting #'s: 14101081, 14014416 Port Volume (Max.): 081 casting: 170.00 cc in/65.00 EX; 416 Casting 168.00cc IN/60.00 EX
GTO (04-05) Restricted Prep.	109.8	2.97, 2.07, 1.43, 1.00, 0.84, 0.57			(F) 320 Vented Disc (R) 286 Vented Disc	3630	Cars shall be prepared to ASCS except that engines and transmissions/final drives must comply with TCS sections 9.1.10.D, 9.1.10.D.1, 9.1.10.D.4. Exhaust systems may be modified per ASCS specifications except OEM manifolds must be maintained. OEM engine/transmission mounts must be maintained. OEM accessory drives must be maintained, except for removal of Air Conditioning Compressors and Supplemental A.I.R. pumps. Shorter drive belts and/or idler pulleys may be utilized. OEM overbore replacement pistons may be utilized. ABS brake systems must be disabled by disconnecting a front wheel speed sensor. An additional rear brake proportioning valve may be added. Factory fuel tanks may be utilized until Dec 31st 2009 unless specifically allowed. Roll cages in existing cars must meet or exceed 2003 TCS specifications. Newly constructed cars must meet ASCS roll cage requirements. A .060 in. thick SIR may be added to maintain performance parity within the class. Max. Tire Size: 275, Max. Wheel Size: 18 x 8.5.

AS	Wheel-base (inch)	Gear Ratios (Std.)	Gear Ratios (alt.)	Gear Ratios (alt.)	Brakes (Max) (in/mm)	Weight (lbs)	Notes:
GTO (2006) Restricted Prep.	109.8	2.97, 2.07, 1.43, 1.00, 0.84, 0.57			(F) 320 Vented Disc (R) 286 Vented Disc	3680	Cars shall be prepared to ASCS except that engines and transmissions/final drives must comply with TCS sections 9.1.10.D, 9.1.10.D.1, 9.1.10.D.4. Exhaust systems may be modified per ASCS specifications except OEM manifolds must be maintained. OEM engine/transmission mounts must be maintained. OEM accessory drives must be maintained, except for removal of Air Conditioning Compressors and Supplemental A.I.R. pumps. Shorter drive belts and/or idler pulleys may be utilized. OEM overbore replacement pistons may be utilized. ABS brake systems must be disabled by disconnecting a front wheel speed sensor. An additional rear brake proportioning valve may be added. Factory fuel tanks may be utilized until Dec 31st 2009 unless specifically allowed. Roll cages in existing cars must meet or exceed 2003 TCS specifications. Newly constructed cars must meet ASCS roll cage requirements. A .060 in. thick SIR may be added to maintain performance parity within the class. Max. Tire Size: 275, Max. Wheel Size: 18 x 8.5.

Spec Miata

1. Add a new section 3. to section 9.1.8.C.1.e, p. 503, to read as follows: *1999-05 Miatas with California emissions equipment may substitute the OEM CA exhaust manifold and catalytic converter with the Federal OEM exhaust manifold.*

Sports Racing

1. Clarify section 9.1.9.A.2.d.3.d, p. 523, by changing the second sentence to read as follows: The cockpit opening shall comply with the following minimum dimensions for both single and two seater sports racers: Cockpit length: 60cm (23.662 inches) Cockpit width *for each seat*: 45cm (17.717 inches) maintained over 30cm (11.811 inches) from the most rearward point of the seat backrest toward the front.

CSR

1. Insert a new section 9.1.9.A.2.a.14, p. 518, and renumber previous section a.14 to a.15.

   14. Two-seat sports racers using up to 2.0 liter 4 cylinder, 4 cycle engines are eligible to compete in the C Sports Racer class subject to the following restrictions.

   Chassis shall be constructed to either of the following specifications:

   FIA Technical Regulations for Production Sports Cars – Group CN, Appendix J, Article 259, and the requirements of GCR 9.4.5.A, 9.4.5.B and 9.4.5.C.

   The C Sports Racer class specification, with the exception that the requirements of 9.1.9.B.3.d must also be met.

   Engines shall meet the requirements of line BB in the engine table.

2. Section 9.1.9.A.2.a, CSR Engine Table, p. 520, add a new spec line AA. to read as follows: Engine Type or Specific Engine: Mazda 13B, Head Type: Peripheral Port, Induction: 36mm SIR, Weight(lbs) carb/F.I.: 1300 / 1325.
3. Section 9.1.9.A.2.a, CSR Engine Table, p. 520, add a new spec line BB. to read as follows: Engine Type: 4 Cyl. 4 Cycle, Max. Displ.(cc): 2000, Head Type: Unrestricted, Max. Valves / Cyl.: 4, Induction: Unrestricted, Weight(lbs) carb/F.I.: 1350 / 1350, Notes: 2 seat cars only per 9.1.9.A.2.a.14.

S2000

3. Add to section 9.1.9.B.5.ff as follows: The use of the Fast Forward aluminum cylinder head is permitted. *The following dimensions must be maintained.*

   Intake port maximum volume 70.0 cc.

   Exhaust port maximum volume 52.0 cc.

   Intake port surface to exhaust port surface 5.580 +/- 0.020 inches

   Intake valve center line to (adjacent) intake valve center line 4.015 +/- 0.015 inches

   Exhaust valve center line to (adjacent) exhaust valve center line 4.015 +/- 0.015 inches

   The machine tool marks in the intake and exhaust ports must remain untouched for 0.750 inches from the respective gasket surfaces.

Touring

T1

1. Ferrari 355 Berlinetta (96-99), p. 576, add the 1995 model year.

T2

1. Mitsubishi Lancer Evo 8/9 RS/GSR/MR (03-06), p. 581, add to the specs as follows: Koyo Radiator #KOY-R2676 allowed.
2. Subaru Impreza WRX STi (03-06), p. 582, add the 2007 model year.

T3

1. BMW Z4 (03-05), p. 583, add to the specs as follows: Wheel Size(in): 17 x 8, Tire Size: 225/45, Notes: H&R Sport Spring kit #50421 allowed. Change the specs to read as follows: Weight(lbs): 2950.
2. Subaru WRX TR (2006), p. 585, add the 2007 model year.
3. Volkswagen GTI, classified in TB 08-01, change the specs to read as follows: Weight(lbs): non-DSG trans. @ 3100, w/ DSG trans. @ 3180.

SOLO EVENTS BOARD MINUTES

SEB MINUTES | *April 23, 2008*

The Solo Events Board met by conference call on April 23. Attending were SEB members Dave Whitworth, Tina Reeves, Jason Isley, Steve Wynveen, Erik Strelnieks, and Ron Bauer; Lisa Noble and RJ Gordy of the BOD; and Brian Harmer and Doug Gill of the National Staff. These minutes are presented in topical order rather than the order discussed.

Unless noted otherwise the effective date for all rule, class, and listing change proposals herein is 1/1/2009.

GENERAL

- In conjunction with the previously published change proposals regarding wing area measurement (12.9), the following rule change proposals are submitted for member comment:

  - Change 16.1.L. (SM/SM2) first paragraph, and Appendix A, Prepared Class X item 1.c. first two paragraphs, to:

  "Aerodynamic Aids: Wings may be added, removed, or modified. Non OE wings may only be attached to the rear deck/hatch area behind the centerline of the rear axle. The total combined surface area of all wings shall not exceed 8 square feet as calculated per section 12.9. The number of wing elements is limited to 2."

  - Change 14.2.F. ST wording to: "Surface area of all splitters, spoilers, and rear wing (see section 12.9) shall not exceed 5 square feet in sum total."

- The SEB has recommended to the BOD that Dave Newman be approved as the NE Division Solo Events Steward.
- The SEB has recommended the approval of John Scheier as RM Division Solo Safety Steward.

STREET TOURING

- The following set of rule change proposals is submitted per the STAC for member comment:

  - Replace 14.12.7 with:

  "Non-standard brake rotors may be used provided they are of equal or larger dimensions (diameter and thickness) and made of ferrous material (e.g. iron). Aluminum rotor hats are allowed. Cars originally equipped with solid (non-vented) rotors may utilize vented rotors. Cross-drilled and/or slotted brake rotors may be fitted provided all such voids are within the disc area, and comprise no more than 10% of that area.

  Brake calipers and mounting brackets may be replaced provided they bolt to the standard locations and the number of pistons is equal to or greater than standard.

  Drum brakes may be replaced with disc brakes of a diameter equal to or greater than the inside diameter of the standard drum. Such conversions must be bolted, not welded to the axle/trailing arm/upright.

  Changes to backing plates/dust shields/brake lines to accommodate these changes are permitted but may serve no other purpose."

  - Also replace 14.6.A with:

  "Cross-drilled and/or slotted brake rotors may be fitted (same size/type/material as standard) provided all such voids are within the disc area, and comprise no more than 10% of that area."

- The STAC is seeking member feedback on the following listing change proposal: Remove the Mazda RX-8 from the STX exclusion list (ref. 08-056).

STREET PREPARED

- The SPAC and SEB are seeking member input on each of the following class listing change proposals:

  - Move from CSP to DSP:

    Dodge SRT-4 (ref. 08-014)

  - Move from DSP to FSP:

    Dodge Neon, 2000-2005

    Dodge/Plymouth Neon, 1994-1999, SOHC

    Dodge/Plymouth Neon, 1994-1999, DOHC

  - Add to FSP (ref. 08-011):

Toyota Corolla, AE86 RWD (all)

Toyota Corolla, AE92 FWD (all)

- Move from ASP to BSP:

  BMW M3 (E46)

- Consolidate the last two lines of the C4 Corvette listings in BSP into one which would read:

  "Corvette C4 (all, 84-96)" (ref. 07-431)

  Note: This would permit update/backdate among all C4s including the ZR-1 version.

- Move from ASP to BSP:

  Pontiac Solstice GXP and Saturn Sky Redline (ref. 08-084)

- The following rule change proposal is submitted for member comment:

  Change 15.2.H to read:

  "Airbags may be electronically disabled but not removed."

- The SPAC is not at this time recommending any changes with regard to the SP classification of the Mitsubishi Evolution and Subaru WRX STI. It is the committee's position that other recommended changes will help competitiveness for some of the other existing cars in BSP.

- The previously published rule change proposal concerning motor mounts (ref. 08-166) will be recommended to the BOD by the SEB.

PREPARED

- The PAC and SEB are requesting member feedback on the following change to the Appendix A listing for G Prepared. This list of vehicles and the allowances was developed from limited preparation (Level 2) vehicles listed in the GCR under GP and HP. The goal is make these cars less expensive and easier to prepare, but allow them to be fully competitive with the cars currently in G Prepared.

The following vehicles will be classed in GP effective January 2009 with the vehicle preparation allowances as listed below. The listed allowances supersede the Section 17 rules where applicable.

Make	Model	Disp. (cc)	Solo GP Min. Weight	Wheels	Max. Valve Size (I/E)	Induction
Fiat	124 Sport Coupe	1592/1608	1590/1610	13x6.5	1.64/1.43	(1) 40 DCNF w/32mm chokes
Ford	Festiva(78-80)	1598	1600	13x7	1.41/1.24	(1) 40 DCN, (1) 40 DCNF, (1) 40 IDF
	Festiva(88-93)	1324	1325	13x7	1.26/1.10	Fuel Inj or Carb
Honda	Civic/SI (84-87)	1488	1490	13x6	1.07/1.30	Fuel Inj or Carb
	Civic/1.5 (88-91)	1493	1495	13x6	1.14/0.98	Fuel Inj
	CRX/SI (84-87)	1488	1490	13x6	1.07/1.30	Fuel Inj or Carb
	CRX/1.5 (88-91)	1493	1495	13x6	1.14/0.98	Fuel Inj
Nissan/Datsun	210 (79-82)	1397/1488	1400/1490	13x6	1.46/1.18, 1.38/1.18	(1) 40 DCNF,DCN,IDF, 28mm chokes
	PL510	1595	1595	13x7	1.65/1.30	(1) 40 DCN or DCNF, 32mm chokes or (1) 36mm DCNVH
Porsche	914-4	1795	1795	15x7	1.61/1.34	Fuel Inj
Renault	Alliance/Encore 1.7 (84-87)	1721	1720	15X7	1.50/1.28	Fuel Inj
Suzuki	Swift GA 1.3 (89-94)	1298	1300	13x7	1.42/1.18	Fuel Inj
Volkswagen	Golf (GTI, GT, GL)	1780	1780	15x7	1.57/1.30	Fuel Inj
	Jetta (85-91)	1780	1780	15x7	1.57/1.30	Fuel Inj
	Rabbit 81-84	1715	1715	14x7	1.34/1.22	Fuel Inj
	Rabbit GTI 8V 83-84	1780	1780	15x7	1.57/1.30	Fuel Inj
	Rabbit 1588	1588	1590	13x7	1.34/1.22	(1) 40 DCN, DCNF, Fuel Inj, w/32mm chokes
	Scirocco 81-84	1715	1715	14x7	1.34/1.22	Fuel Inj
	Scirocco 8V 83-88	1780	1780	14x7	1.57/1.30	Fuel Inj
	Scirocco 1457/1471	1471/1457	1470/1460	13x7	1.34/1.22	(1) 40 DCN, DCNF, IDF w/32mm chokes or Fuel Inj
	Scirocco 1588	1588	1590	13x7	1.34/1.22	(1) 40 DCN, DCNF, or Fuel Inj. 32mm chokes

Make	Model		Max. track F/R
Fiat	124 Sport Coupe	Comp. Ratio limited to 11.0, valve lift to .425"	56.7/55.4
Ford	Festiva(78-80)	Comp. Ratio limited to 11.0, valve lift to .450"	56.0/55.5
	Festiva(88-93)	Comp. Ratio limited to 10.5, valve lift to .450"	60.1/59.5
Honda	Civic/SI (84-87)	Comp. Ratio limited to 11.0, valve lift to .390"	58.8/59.1
	Civic/1.5 (88-91)	Comp. Ratio limited to 11.0, valve lift to .390"	59.8/60.0
	CRX/SI (84-87)	Comp. Ratio limited to 11.0, valve lift to .390"	58.8/59.1
	CRX/1.5 (88-91)	Comp. Ratio limited to 11.0, valve lift to .390"	59.8/60.0
Nissan/Datsun	210 (79-82)	Comp. Ratio limited to 10.5, valve lift to .450", Alt. Diff assembly H165	56.0/54.7
	PL510	Comp. Ratio limited to 12.0, valve lift to .450"	54.5/54.5
Porsche	914-4	Comp. Ratio limited to 10.5, valve lift to .420" Cyl. barrels of alt. Mat. allowed	56.5/58.2
Renault	Alliance/Encore 1.7 (84-87)	Comp. Ratio limited to 10.5, valve lift to .450"	58.7/56.3
Suzuki	Swift GA 1.3 (89-94)	Comp. Ratio limited to 11.0, valve lift to .450"	58.4/57.4
Volkswagen	Golf (GTI, GT, GL)	Comp. Ratio limited to 11.5, valve lift to .420"	58.8/58.2
	Jetta (85-91)	Comp. Ratio limited to 11.5, valve lift to .420"	58.8/58.2
	Rabbit 81-84	Comp. Ratio limited to 11.0, valve lift to .450"	58.9/57.2
	Rabbit GTI 8V 83-84	Comp. Ratio limited to 12.0, valve lift to .420"	58.9/57.2
	Rabbit 1588	Comp. Ratio limited to 11.0, valve lift to .450"	58.9/57.2
	Scirocco 81-84	Comp. Ratio limited to 11.0, valve lift to .450"	58.9/57.2
	Scirocco 8V 83-88	Comp. Ratio limited to 12.0, valve lift to .420"	58.9/57.2
	Scirocco 1457/1471	Comp. Ratio limited to 11.0, valve lift to .450" only 1457 may use Fuel Inj	58.9/57.2
	Scirocco 1588	Comp. Ratio limited to 11.0, valve lift to .450"	58.9/57.2

1. Drivetrain Component Modification

A. General

1. Stock and permitted alternate components of the drivetrain can be modified by any mechanical or chemical means. Modification of a drive train component does not permit relocation of that component.

2. No material or mechanical extension can be added to any stock or alternate component unless specifically authorized by these rules. Repairs to a stock or alternate component are permitted provided the repair serves no prohibited function.

3. Stock and permitted alternate components of the drivetrain can have thermal barrier and friction altering coatings applied.

B. Induction System

1. All inducted air must pass through the venturi(s) of the carburetor(s). All single-carbureted cars may fit a permitted optional carburetor. Permitted optional carburetors are:

   a. Weber 32 DGV/DGAV/DGEV
   b. Weber 32/36 DGV/DGAV/DGEV
   c. Weber 32/36 DFV/DFAV/DFEV
   d. Weber 34 DAT/DATR/DATRA/DMTR
   e. Holley-Weber 5200

   The stock or permitted alternate carburetor must not be modified. Carburetor jets needles, metering rods and needle valves are unrestricted. Choke mechanisms, plates, rods, and actuating cables, wires, or hoses can be removed. The number of carburetors must not be changed from stock.

2. Stock or permitted alternate sidedraft carburetor(s) can use an adaptor plate and/or a spacer in addition to any stock spacer, between the carburetor(s) and the intake manifold. Material for the adaptor plate and spacer is unrestricted. No adaptor plate or spacer can serve any purpose other than to space out and/or mate the carburetor(s) to the permitted intake manifold. The adapter or spacer cannot create a plenum or change the carburetor(s) orientation. The maximum thickness for the adapter, spacer, stock spacer or combination of all is 1.25”. For the purpose of these rules an Isolator is a spacer.

3. Stock or permitted alternate downdraft carburetor(s) can use an adaptor plate and/or a spacer in addition to any stock spacer, between the carburetor(s) and the intake manifold. Material for the adaptor plate and spacer is unrestricted. No adaptor plate or spacer can serve any purpose other than to space out, or mate the carburetor(s) to the permitted intake manifold. The adapter or spacer cannot change the carburetor(s) orientation. Adaptors and spacers can have a bore larger than the throttle bore of the stock or permitted alternate carburetor(s). The maximum thickness for the adapter, spacer, stock spacer or combination of all is 1.25”. For the purpose of these rules an isolator is a spacer.

4. Fuel Injection: All inducted air must pass through the throttle body and be subject to control by the throttle butterfly. The stock throttle body casting/housing must be retained. The inside dimensions of the throttle body casting/housing and all dimensions of the throttle butterfly must remain stock. The throttle butterfly shaft must not be relocated. The outside diameter of the portion of the throttle butterfly shaft located in the throttle body bore must be no smaller than stock. The contour of the interface between the throttle butterfly shaft and the butterfly must remain stock. The throttle butterfly and any throttle butterfly to shaft screws/bolts can be attached to the throttle butterfly shaft by any means including welding or brazing. Holes or slots can be created in the throttle butterfly for purposes of idle adjustment only. The number of injectors must remain stock. The mounting position and injection point must be stock. The original type of fuel injection must be maintained (electronic, mechanical, electro-mechanical). In all other respects the fuel injection system is unrestricted.

5. All carburetors must retain the stock method of fuel distribution. Utilization or modification of a carburetor’s components to effect an annular discharge configuration is prohibited.

6. The intake manifold may be port matched on the port mating surface to a depth of no more than one inch. Balance pipes or tubes on all intake manifolds can be plugged or restricted. The intake manifold cannot otherwise be modified.

C. Cylinder head

The Cylinder Head can only be modified as follows:

1. To install an alternate camshaft, and/or adjustable cam gears.

2. To port match on the port mating surface to a depth of no more than one inch.

3. To facilitate the installation of permitted alternate components, provided the modification serves no other function.

4. To achieve the maximum specified compression ratio by the machining of the deck surface.

5. To completely plug the holes resulting from the removal of EGR valves and air nozzles. The plugs must serve no other purpose.

6. To completely plug the stock fuel injection ports in the cylinder head, if the stock fuel injection is removed and carburetors are utilized. The plugs must serve no other purpose.

7. To utilize O-rings to replace or supplement a cylinder head gasket.

8. To fit valve seats. Valve seats are unrestricted. Valve seat angles are unrestricted. The valve seat insert can be no taller than one half inch.

D. Camshaft and Valve Gear

1. Camshafts are unrestricted. Any lifters, tappets/cam followers of the same type and diameter as stock are permitted. The interchange of hydraulic and solid lifters is permitted.

2. Camshaft timing chains, gears, belts, and sprockets are unrestricted provided that they are of the same type, and outside diameter as fitted stock. Single row or double row timing chains can be used. Adjustable timing gears are permitted.

3. A timing chain/belt tensioner can be added to an engine where a tensioner is not fitted as stock, provided that it acts upon the portion of the chain/belt that travels from the final cam sprocket/gear to the crankshaft. The timing belt cover can be removed.

4. Any ferrous (including stainless steel) material valves meeting the specified head and stock stem diameter can be used. Any ferrous valve springs of the same type as stock, can be used. Valve retainers, Spring retainers, lash Pads, valve keepers, seals and adjustment shims are unrestricted.

5. Pushrods are unrestricted. Rocker shafts when utilized in the same stock system can be replaced by an alternate shaft, and is unrestricted. Valve rocker arms, cam followers, rocker ratios and rocker/follower ratios must be stock.

6. Valve guide material is unrestricted, but must have stock external dimensions.

7. Where maximum valve lift is specified, valve lift is measured at the valve with zero lash or clearance.

E. Block and Cylinders

1. The block can be re-bored no more than 1.2mm (.0472 in) larger than the maximum dimension given on the specification line for that make, model, and displacement. A cylinder block from any model from the same manufacturer, which is of the same material and dimensionally identical throughout, except for non-critical bosses, is permitted. Oil passages can be re-routed, enlarged, restricted or plugged.

2. Cylinders or cylinder sleeves of any material can be fitted to the block.

3. Crankshaft main bearing caps and main bearing cap bolts are unrestricted.

4. The block can be machined to utilize o-rings to replace or supplement a cylinder head gasket.

5. Crankshaft oil seal(s) are unrestricted.

F. Pistons and Connecting Rods

1. Pistons, pins, clips and/or pin retainers and piston rings are unrestricted. Pistons must be constructed of metal.

2. Stock connecting rods are required, but can be lightened and balanced.

3. Connecting rod bolts and nuts are unrestricted.

G. Crankshaft and Flywheel

1. Stock crankshafts are required. The Crankshaft can be lightened and balanced. Journal diameters can be a maximum undersize of 0.045 from stock diameter.

2. The direction of the crankshaft rotation must remain stock.

3. The use of any external crankshaft vibration dampener is permitted.

4. Any flywheel of stock diameter or larger can be used, provided it attaches to the standard or permitted alternate crankshaft at the stock location. Additional fasteners can be used. The diameter of the flywheel includes the diameter of the starter ring. Cars that are permitted a specific alternate transmission on the specification line can use a flywheel of stock diameter or larger for that alternate transmission.

5. Clutch assemblies, clutch linkage and release bearings are unrestricted. Carbon clutch components are prohibited.

H. Oiling System

1. Any mechanically driven oil pump can be used. Chassis components can be modified to allow installation of the oil pump. Dry sump systems are prohibited.

2. The Oil pan/sump, scraper(s), baffle(s), windage tray(s), oil pickup(s), pressure accumulator(s) and oil filter(s) are unrestricted. The filter(s) and pressure accumulator(s) must be securely mounted within the bodywork. Oil lines are unrestricted. Oil Lines can pass through the driver/passenger compartment.

3. Breather vents are unrestricted.

4. No part of the oiling system can be connected to the exhaust system.

I. Exhaust System

1. The exhaust header and exhaust system is unrestricted. Floor pans can be altered only to recess mufflers. No modifications can be made to the bodywork to fit any other part of the exhaust system.

J. Other Engine Components

1. The use of alternate engine components which are normally expendable and considered replacement parts, such as fasteners, gaskets, seals, bearings, water pumps, etc., is permitted. Electrically driven water pumps are prohibited.

2. Bushings can be installed where none are fitted as stock, provided they are concentric, and that the centerline of the bushed part is not changed.

3. The addition of alignment aides, such as dowels, bolts or keys can be added to engine components.

4. Other than the limitations in 9.1.5.E.1.f.2, engine drive pulleys are unrestricted.

5. Engine steady bars are unrestricted.

6. Engine mounts of alternate design and/or material can be used, but there can be no change to the engine's fore, aft or vertical location except as permitted in 9.1.5.E.1.o.6. Engine mounts must attach to the engine in their stock location.

K. Transmission

1. The Transmission is unrestricted, providing that it is fit in the same basic location as stock. Sequential shifting transmissions are prohibited. Pneumatic, hydraulic or electric actuation of the gearshift mechanism is prohibited.

2. All transmissions must have a reverse gear that is operable by the driver from his normal seated position and capable of sustained movement of the car, under its own power, in the reverse direction. A driver-operated device for locking out the reverse gear can be added, provided it does not prevent prompt engagement of reverse in an emergency situation.

3. Shift linkage is unrestricted. The shift linkage opening in the transmission tunnel or tunnel cover can be modified to allow the installation of the alternate shift linkage.

4. The transmission tunnel and tunnel cover can be altered to allow the installation of an alternate transmission and/or drive shaft. Cars equipped with a removable transmission tunnel cover as stock, can substitute the stock transmission tunnel cover with one of an alternate material.

5. There is no weight penalty for the use of a stock transmission utilizing stock case, gear ratios and synchromesh style gear engagement. An alternate transmission that uses stock type, circular, beveled synchronizers, imposes a 2.5% weight penalty. An alternate transmission that uses a gear engagement mechanism different than stock type, circular, beveled synchronizers imposes a 5% weight penalty.

L. Final Drive

1. Drive shaft(s) are unrestricted.

2. Final drive ratio is unrestricted.

3. Internal differential components are unrestricted. Electric control of the differential is prohibited.

4. Substitution of the differential housing is only permitted on front engine/front drive or rear engine/rear drive cars through the use of an alternate transaxle

5. Axle shafts, bearings, bearing carriers, hubs, and universal joints/CV joints are unrestricted.

6. Transverse engine cars can rotate the engine about the crankshaft centerline to align axle shafts/constant velocity joints. On rear engine/rear drive cars the engine/drivetrain can be relocated vertically upward, to a maximum of one inch, to allow alignment of suspension and driveline components.

2. Suspension and Steering

A. Ride height is unrestricted.

B. Suspension Components

1. Suspension control arms are unrestricted, provided the quantity of these items remains as stock.

2. Suspension bushings, bearings and ball joints are unrestricted.

3. Any anti-roll bar(s) and rear axle traction bar(s), rear axle panhard rod and watts linkage can be added or substituted, provided its/their installation serves no other purpose. The mounts for these devices can be welded or bolted

to the car. These devices and their mounts cannot be located in the trunk or driver/passenger compartment unless fitted as stock. Rear axle traction bar(s) used to control axle housing rotation must be solid bar or tube.

4. When a cars anti-roll bar also acts as a suspension locating device, the bars attachment points and pivot points on the chassis and suspension control arms must remain in the stock location.

5. Bump stops and bracketry are unrestricted.

C. Suspension Mounting Points

1. Cars equipped with a McPherson strut/Chapman strut suspension can adjust camber and caster at the upper strut mounting point. The upper strut mounting point must remain on stock chassis structure. Slotted adjusting plates at the upper mounting point are permitted. The slotted plates must be located on the stock chassis structure. Material can be removed or added to the top of the strut tower to facilitate installation of the slotted adjuster plate, provided it serves no other purpose.

2. All forms of suspension can adjust camber and caster by the use of shims.

3. Rear independent suspension mounting holes can be slotted within the limits of the stock structure for the sole purpose of camber and/or toe adjustment.

4. Suspension cross member/sub frame mounting bushing material is unrestricted.

5. Suspension pickup/pivot axis points can be reinforced but must remain in the stock location.

D. Springs and Shock Absorbers

1. Any springs or torsion bars can be used, provided the quantity and type of these items remains as stock. Springs and torsion bars must be installed in the stock location using the stock system of attachment. The use of tender springs is permitted, provided the tender springs are completely compressed when the car is at static ride height. Static ride height will be determined with the driver seated in the normal driving position.

2. Shock absorbers are unrestricted, provided the quantity and type (i.e. tube, lever) of these items remains as fitted stock. Shock absorbers must be installed in the stock location using the stock system of attachment. The mounting of the remote reservoir of a remote reservoir shock absorber is unrestricted. No shock absorber can be capable of adjustment by the driver while the car is in motion, unless fitted as stock.

3. MacPherson/Chapman struts must be installed in the stock location using the stock system of attachment. Remote reservoir strut dampeners are permitted. The mounting of the remote reservoir of a remote reservoir Macpherson/Chapman strut is unrestricted. No MacPherson/Chapman strut can be capable of adjustment by the driver while the car is in motion, unless fitted as stock.

4. MacPherson/Chapman strut:

A. MacPherson/Chapman strut suspensions that are a two-piece spindle/bearing carrier and bolt on damper design, can replace the bolt on damper portion of the MacPherson/Chapman strut with any replacement damper.

B. MacPherson/Chapman strut suspensions that are a one-piece spindle/bearing carrier and strut tube design, can modify the stock strut tube in order to fit a replacement damper, coil spring and perch. The spindle/bearing carrier portion of the strut can be modified in order to fit an alternate strut tube and any replacement damper. One-piece design MacPherson/Chapman strut suspensions can gusset between the tube and spindle/bearing carrier portion of the strut for the sole purpose of strengthening the strut tube.

C. MacPherson/Chapman strut suspensions that are a one-piece spindle/bearing carrier and strut tube design that also incorporates an integral steering arm must retain the stock steering arm in its stock location.

D. MacPherson/Chapman struts that are a bearing carrier, cannot modify or replace the bearing carrier under the unrestricted bearing carrier rule in section 9.1.5.E.2.o.5.

5. All types of suspensions can modify the brake caliper mounting portion of the spindle/bearing carrier, if necessary to fit an approved alternate brake caliper.

6. Shackles or spacers/lowering blocks can be used with leaf springs to adjust ride height.

7. Spacers and threaded sleeves with adjustable spring seats can be used with coil springs. Coil-over threaded body shocks/struts are permitted if coil-over shocks/struts were fitted as stock.

8. Bump stops are unrestricted.

E. Steering

1. Steering system components can be reinforced by the addition of material and/or the addition of support to the stock component.

2. Bushings locating or retaining any steering system components can be replaced by bushings of any material. The alternate bushing cannot relocate the component it retains.

3. The outer tie rod end can be replaced by a rod end. The rod end can be coupled to the steering system by a rod or

threaded tube of unrestricted origin and material. The tapered hole in the steering arm on the outboard side of the tie rod (rod end) can be drilled or reamed to allow a bolt to be used to retain the rod end to the steering arm. The rod end can be moved up or down by the installation of spacers for the sole purpose of reducing bump steer.

4. The steering column is unrestricted. A collapsible type steering column is strongly recommended. The driver's normal seated position must not be relocated.

5. Cars equipped with power steering as standard equipment can modify, substitute, disable and/or remove the power pump, related hoses and mounting brackets..

3. Brakes

A. Stock calipers must be retained. Cars fitted with integral hat brake rotors can convert to a two piece design hat and brake rotor. The alternate design hat must be made of ferrous or aluminum material. Alternate discs can be used, but must be made of ferrous material. Alternate drums can be used, but must be made of a ferrous or aluminum material. Alternate discs and drums must be the stock diameter, width and design. Brake rotors can not be cross drilled or slotted unless fitted as stock.

B. Cars fitted with rear drum brakes, can convert to rear disc brakes. When converting from rear drum brakes to rear disc brakes:

1. Rear brake rotors can be no larger in diameter than the largest permitted front brake rotor. Rear brake rotors must be solid and made of a ferrous material. Rear brake rotors can not be cross drilled or slotted.

2. Rear brake rotor hats can be made of a ferrous or aluminum material.

3. Rear calipers and mounting brackets are unrestricted but must be made of a ferrous or aluminum material. The standard and alternate brake listings on a vehicle's specification line, does not prohibit a car that was fitted with rear drum brakes as stock from converting to rear disc brakes under this rule.

C. Dual braking systems are required. Any dual brake master cylinder(s) and pedal assembly can be fitted. Pressure equalizing and proportioning valve devices are unrestricted.

D. Servo assists are unrestricted.

E. Drum brake wheel cylinders are unrestricted.

F. Brake pads and brake linings are unrestricted.

G. Brake lines are unrestricted.

H. The hand brake and its operating mechanism can be removed.

I. Brake Ducting

1. Brake air ducts can be fitted.

2. The front brake duct inlet(s) must not extend to the side beyond the centerlines of the front wheels, or forward of the forward most part of the front of the body or front air dam.

3. Rear brake duct inlet(s) must face forward, they must be located no more than 24" forward of the rear axle centerline and must not extend to the side beyond the centerlines of the rear wheels.

4. Backing plates and dust shields are unrestricted."

F125 / FORMULA JUNIOR

- After reviewing feedback the KAC has recommended that the SEB proceed with the previously published changes to Section 19.1.D.1.f.2 (specifying a 20-lb weight penalty instead of 30 lbs for non-OE ignition) and Section 19.1.D.2 (specifying a 35-lb weight penalty for ICC motors).
- The KAC is submitting the following rule change proposals for member feedback:

- Add to approved engines for FJA, Rotax Minimax (13.5 HP).
- Add to approved engines for FJB, Rotax Micromax (6.7 HP).

SOLO TRIALS

Proposed Changes to Appendix D – Solo Trials Rules

Multiple Purposes: Taking into consideration the history of this program and to 1) bring these rules more in line with Solo requirements and expectations, 2) reduce the need for non-regional oversight, and 3) eliminate references to the ***requirements*** of the GCR that are in excess of what is needed in this program, the following changes are recommended for 2009.

Section II – Concept

Add a new 1st and 2nd sentence:

"The Solo Trials Rules specified within this Appendix are an extension of the Solo Rules. They are exception or additions to those rules and as such, if a subject matter is not specific herein, the Solo Rules governing that matter shall also govern a Solo Trials event."

Section III – Procedure for SCCA Sanction

Eliminate "numbers"; change 1st sentence of current #1 to read:

"Submit to the National Office an event site approval *and request for sanction* which includes…"

Add:

"All new sites are required to have an inspection to determine suitability for this program. Prior approved sites do not need any subsequent inspections as long as there have been no changes to the surface or other safety-related criteria has changed since the initial inspection. Sanction will be ranted after successful completion of course site inspection."

Delete paragraph #2.

Section VI – Event Officials

Change 1st and 2nd sentences to read:

"The Chief Steward and Safety Steward shall be appointed by the Solo Chairman of the host Region but may be subject to review by the DSS and/or the DSSS if there is a need. All other officials may be appointed by the host Region without review."

Section X – Vehicle Safety Equipment Requirements

Change X.b. to read:

"All drivers in SCCA-sanctioned Solo Trials events in which a roll bar or roll cage is installed shall utilize either a five-, six-, or seven-point restraint harness meeting the following specifications. A 7-point restraint harness is recommended. Arm restraints are required on all open cars including open targa-tops, sunroofs, and T-tops. The restraint system installation is subject to approval by the Chief Technical and Safety Inspector.

A. A 5-point system for use in automobiles where the driver is seated in an upright position consists of:

- A 3-inch seat belt or an FIA or SFI 16.5 certified 2-inch seat belt.
- An approximately 3-inch shoulder harnesses or FIA or SFI 16.5 certified 2-inch shoulder harnesses only if the HANS Device is used by the driver. Should the driver at anytime not utilize the HANS Device, 3-inch shoulder harnesses are required.
- An approximately 2-inch anti-submarine strap.

A 5-point harness is considered a minimum restraint system. 6- or 7-point systems are highly recommended in all cars including automobiles where the driver is seated in an upright position.

B. A 6- or 7-point system recommended for use in all automobiles consists of:

- A 3-inch seat belt or an FIA or SFI certified 2-inch seat belt.
- An approximately 3-inch shoulder harness or FIA or SFI 16.5 certified 2-inch shoulder harness only if the HANS Device is used by the driver. Should the driver at anytime not utilize the HANS Device, 3-inch harnesses are required.
- 2 or 3 approximately 2-inch leg or anti-submarine straps.

C. The shoulder harnesses shall be the over-the-shoulder type. There shall be a single release common to the seat belt and shoulder harnesses. When mounting belts and harnesses, it is recommended that they be kept as short as reasonably possible to minimize stretch when loaded in an accident.

The shoulder harness shall be mounted behind the driver and supported above a line drawn downward from the shoulder point at an angle of 20 degrees with the horizontal. The seat itself or anything added only to the seat shall not be considered a suitable guide. Guides must be a part of the roll bar/cage or part of the car structure.

Only separate shoulder straps are permitted (Y-type shoulder sstraps are not allowed). H-type configuration is allowed.

D. The single anti-submarine strap of the 5-point system shall be attached to the floor structure and have a metal-to-metal connection with the single release common to the seat belt and shoulder harnesses.

E. The double lag straps of the 6- or 7-point system may be attached to the floor as above for the 5-point system or be attached to the seat belt so that the driver sits on them, passing up between his/her legs and attaching either to the single release common to the seat belt and shoulder harnesses or attaching

to the shoulder harness straps. It is also permissible for the let straps to be secured at a point common to the seat belt attachment to the structure, passing under the driver and up between his/her legs to the seat belt release or shoulder harness straps.

All straps shall be free to run through intermediate loops or clamps/buckles.

F. Each seat belt and shoulder strap of the harness (5-, 6-, or 7-point) shall have an individual mounting point (i.e., 2 for each seat belt and 2 for each shoulder strap minimum). 6- or 7-point system anti-submarine straps may share a mounting point with one or both seat belts. The minimum acceptable bolts used in the mounting of all belts and harnesses are SAE Grade 5. Where possible, seat belts, shoulder harnesses, and anti-submarine straps should be mounted to the roll structure or frame of the car. Where this is not possible, large diameter mounting washers or equivalent should be used to spread the load. Bolting through aluminum floor panels, etc., is not acceptable.

G. Unless specifically mentioned herein, compliance with all driver restraint systems that comply with SFI 16.1, SFI 16.5, or FIA 8853/98 is highly recommended.

H. Harness threading must be assembled in accordance with the manufacturer's instructions.

Tech Inspectors are cautioned to inspect all belts and harnesses for wear, looking for abrasions, rips, tears, or other issues which would make a belt/harness of questionable value for its intended purpose. Vehicles with such issues will be prohibited from these events."

Change X.3.c. to read:

"A hand-held fire extinguisher adhering to the following standards is highly recommended.

a. Halon 1301 or 1211; 2-pound minimum capacity by weight.

b. Dry chemical; 2-pound minimum with a positive indicator showing charge. Chemical: 10BC UL rated – potassium bicarbonate (Purple K) recommended; 1A-10BC UL rated multipurpose – ammonium phosphate and barium sulfate or Monnex.

c. The fire extinguisher shall be securely mounted in the cockpit. All mounting brackets shall be metal and of the quick-release type."

Change X.4. to read:

"125cc shifter karts are permitted with the appropriate driver safety gear as specified in the Solo Rules. However, depending upon surface irregularities of the site, the DSSS may prohibit these karts. Junior karts are not permitted."

NOT RECOMMENDED

- Stock: Move 1993-95 RX-7 from SS to AS (ref. 08-247)
- ST: Remove the BMW M3 (E36) exclusion from STX (ref. 08-120, 08-212)
- ST: Factory fog light removal (ref. 08-100, 08-101)
- ST: Emissions rule change (ref. 08-124)
- SP: Roll bars (ref. 08-108)
- SP: Weight limits (ref. 08-109)
- SP: Bushing materials (ref. 08-168)

REFERRED TO COMMITTEE FOR FOLLOWUP

- SAC: Scion xB, Nissan Versa, SSF ratings

TECH BULLETINS

1. Stock: Per the SAC, the Lotus Sport Suspension (currently known as the Sport Pack) is a factory option package for the Lotus Elise which is eligible for Stock category competition. It should not be confused with the 2006 Lotus Sport Elise, which is a limited-production model (50 cars) developed by Lotus Sport (a division of Lotus Cars which develops high performance upgrade components for Lotus vehicles).

   Note: This will be added to Appendix F, and a reference to it will accompany the Appendix A Elise listing in Stock.

2. Stock: The following models are added to the Stock exclusion list:

   Lotus Elise Supercharged ('08+)

   Dodge Viper ('08+)

   Comment: The SAC wishes to maintain the status quo in SS at this time. The SAC will propose multiple options to bring these cars into SS in 2009.

3. Stock: The following new listings, recommended by the SAC and effective immediately upon publication, are added to the Stock classes as noted:

   BMW M3 (E90) SS

BMW 335 Xi	FS
Lexus IS-F	SS

4. Street Prepared: Per the SPAC the following new listings, effective immediately upon publication, are added in Appendix A:

BMW 335, 328 ('06+)	BSP
BMW 135, 128 ('08+)	BSP

5. Street Prepared: Per the SPAC, the listing for the M-Technic in BSP is invalid and will be removed (ref. 08-243).

   Comment: Careful research has shown that the "M-Technic" listing is erroneous; "M-Technic" was simply an appearance package including the "M" appearance items.

ROADRALLY BOARD MINUTES

RRB MINUTES | *May 7, 2008*

The *RoadRally* Board (RRB) met via conference call on Wednesday, May 7, 2008 at 7:30 PM Central Time.

Attending were: Kevin Poirier, Chairman, members Rick Beattie, Chuck Edwards, Lois Van Vleet and Jim Wakemen, Jr., Duck Allen, Board Liaison, and Pego Mack, National Rally Manager.

Chairman Poirier called the meeting to order at 7:30 pm CDT.

It was noted that minutes of prior meetings have been approved.

Event report

The National Rally recently hosted by the Steel Cities Region had 11 cars. Contestants felt that it was a good National Rally weekend.

Next National Rally
Steve Gaddy and Chris Bean are rallymasters for the Washington DC Region National Rally to run Labor Day weekend.

USRRC

The United States Road Rally Championship events will take place on Halloween weekend. The Oregon Region reports that the GTA will occur on Friday, the Course event on Saturday, and the Tour on Sunday.

Disciplinary Review Committee (DRC)

Pursuant to complaints of unsafe practices in a recent National Rally a DRC found the allegations to be true and imposed corrective actions on three members. The DRC noted that SCCA members should not continue competition in an unsafe rally. Safety is a responsibility of all SCCA members.

Division stewards conference call

A recent conference call meeting of Division Rally Stewards was poorly attended due to inadequate advance notice. The next meeting will be in July, 2008.

Photo contest

The photo contest has begun. Rules can be found in the SCCA Forum.

Changes to the RRRs

A proposal to require combination of one-car classes on National Rallies was tabled until the June meeting. Members are reminded that proposed rule changes for 2009 should be submitted now.

Old business

None.

New business

Various issues will be discussed at the next meeting.

Next meeting

The next meeting of the RRB will be in person in Milwaukee, WI the weekend of June 7-8, 2008.

RALLYCROSS BOARD MINUTES

RXB MINUTES | *March 10, 2008*

The RxB met via conference call on March 10, 2008. Members present were Tom Nelson, Mark Utecht, Matt Nichols, and Mark Walker, Chair. Others present were Howard "Duck" Allen, BoD Liason.

Mark Utecht has been conversing with members on the forums concerning rule changes. Board members are reminded to review the forums.

The RxB discussed the tread gap measuring tool created by RallyCross Steward Scott Beliveau. Motion: (Utecht/Walker): Approve this tool as an official tread gap measurement tool. ALL FOR. RallyCross event officials are reminded that this is only a tool and that their judgment of compliance at the event is paramount.

Meeting was adjourned at 9:00pm.

QUICK LINKS

The following items have been removed from regular inclusion in FasTrack News and can be found on SCCA's Web site at the following links:

CLUB RACING

Accredited Driver Licensing Schools: http://www.scca.com/contentpage.aspx?content=39

Forms: http://www.scca.com/contentpage.aspx?content=45

Technical Forms: http://www.scca.com/contentpage.aspx?content=74

Scrutineer's Forms: http://www.scca.com/contentpage.aspx?content=77

Vehicle Homologation Forms: http://www.scca.com/contentpage.aspx?content=79

General Competition Rules (GCR): http://www.scca.com/contentpage.aspx?content=44

2008 Runoffs Home Page: http://www.scca.com/Runoffs

SOLO

Forms: http://www.scca.com/contentpage.aspx?content=60

Rulebook: http://www.scca.com/contentpage.aspx?content=61

2008 Tire Rack SCCA Solo National Championships: http://www.scca.com/event.aspx?hub=6&event=12143

RALLY

Forms: http://www.scca.com/contentpage.aspx?content=49

Rulebook: http://www.scca.com/contentpage.aspx?content=50

SCCA NATIONAL CONVENTION

Event page: http://www.scca.com/event.aspx?hub=6&event=11083

EVENT CALENDAR: http://www.scca.com/events.aspx?hub=10

Fastrack news official SCCA member notification

EFFECTIVE FIRST DAY OF THE COVER MONTH UNLESS OTHERWISE NOTED July 2008

BOARD OF DIRECTORS MINUTES

BOARD OF DIRECTORS' MINUTES | SPORTS CAR CLUB OF AMERICA, INC. | *June 4, 2008*

The Board of Directors, Sports Car Club of America, Inc. met via teleconference June 4, 2008. The following members participated: R. J. Gordy, Chairman, Howard Allen, Jim Christian, Philip Creighton, Larry Dent, Bob Lybarger, Lisa Noble, Andy Porterfield, John Sheridan, Mike Sauce, K.P. Jones and Jerry Wannarka. Jim Julow, President, Jeff Dahnert, Vice President of Finance, also participated.

MOTION: To approve the minutes of the May 8, 2008 meeting. (Sheridan/Dent) PASSED, Unanimous

PRESIDENTS REPORT

Jim reviewed progress on the contract for the Runoffs at Road America. He presented a proposal for incentives to be awarded to competitors with participation in multiple consecutive Runoffs.

TREASURERS REPORT

Jeff Dahnert reported that through April 2008, we were slightly behind budget.

OLD BUSINESS

MOTION: To rescind the following motion made at the May, 2008 BoD meeting: That the CRB use existing procedures to implement class consolidation of CSR with DSR, and SSB with SSC or T3, effective October 13th 2008. (Creighton/ Sauce) PASSED, Voting NO, Noble, Sheridan. Abstaining, Wannarka, Jones

MOTION: To rescind the following motion made at the May, 2008 BoD meeting: That the CRB use existing procedures to structure National classes in the following manner by the 2010 competition year. SRF, SM, CSR/DSR/S2, GTL/GT3, FP/HP/GP, GT3/DP, GT2/GT3/BP, FF, T1/ST, T2, T3/SSB, SSC/SSB, FV, GT1, AS, FA/FB, FC, EP, F5, FE, FM. PA (Sauce/Creighton) PASSED Voting NO, Noble, Sheridan. Abstaining, Wannarka

MOTION: To rescind the following motion made at the May, 2008 BoD meeting: That for 2009 the Runoffs consist of 23 races for all 28 classes and for 2010, 21 races for 21 classes. (Dent/Lybarger) PASSED Unanimous

MOTION: To amend GCR 3.9.2E to read as follows: The number of races allowed in the runoffs shall not exceed 24, and may be less (effective 2009). (Jones/Lybarger) PASSED, Voting NO, Sauce, Christian, Sheridan, Allen

MOTION: To add GCR 3.9.2F as follows: Invited Runoffs Classes
Only those classes which have attained an average of 2.5 cars or better per event, as outlined in GCR 9.1.12, in the previous year of national racing activity, shall be invited to the following year's runoffs; effective for the 2009 runoffs, based on 2008 results. (Jones/ Wannarka) PASSED Abstaining, Noble. Voting NO, Christian

MOTION: To allow Scott Tucker to count two national finishes in ST as finishes in T1 for purposes of qualifying for the 2008 Runoffs. (Creighton/Sauce) FAILED, Voting YES, Dent, Lybarger, Sauce, Creighton

NEW BUSINESS

MOTION: To approve Bob Eddy as Executive Steward for MidWest Division effective immediately. (Noble/Dent) PASSED Unanimous

MOTION: To approve the concept of the Runoffs Continuous Participation Rewards Program, and authorize staff to proceeded with implementation for the 2009 Runoffs. (Sheridan/ Allen) PASSED Abstaining, Christian, Sauce, Noble

CONTENTS

BOARD OF DIRECTORS	**1**
Board of Directors Minutes	1
CLUB RACING	**3**
CRB Minutes	3
Technical Bulletin	7
Runoffs Entry Form	10
COURT OF APPEALS	**11**
SOLO	**16**
SEB Minutes	16
RALLY	**NONE**
QUICK LINKS	**23**

MOTION: To waive the provisions of GCR Section 3.9.1.F to allow Dan McKeever to change his Region of record, from SEDiv to RMDiv. (Christian/Jones) PASSED Unanimous

Motion: To approve Carla Heath as National Administrator of Timing and Scoring. (Wannarka/Dent) PASSED Abstaining, Noble

MOTION: To adjourn. (Porterfield/ Allen)

Respectfully submitted,

Jim Christian
Secretary

CLUB RACING BOARD MINUTES

CLUB RACING BOARD |SPORTS CAR CLUB OF AMERICA, INC. | *June 3, 2008*

The Club Racing Board met by teleconference on June 3, 2008. Participating were Bob Dowie, Chairman; Chris Albin, Stan Clayton, Dave Gomberg, Peter Keane, and Russ McHugh. Also participating were Jim Christian and Jerry Wannarka, BoD Liaisons; John Sheridan, BoD guest; Terry Ozment, Vice President of Club Racing; John Bauer, Technical Assistant Club Racing; and Lauri Burkons, CRB Secretary.

In addition to those items covered in Technical Bulletin 08-07, the following decisions were made:

PROPOSED RULE CHANGES OR CAR RECLASSIFICATIONS

The following subjects will be referred to the Board of Directors for approval. Address all comments, both for and against, to the Club Racing Board. Comments may be e-mailed to crb@scca.com.

GCR

Item 1. Effective 11/1/08: Change recommended item 3 as published in the February Fastrack with 5.7.3 as follows (5.7.1 and 5.7.2 remain as published in the February Fastrack):

5.7.3 Standards

A sound level instrument (meter) that meets American National Standards Institute (ANSI) S1.40-2006 Class 2 or better shall be used. The primary *maximum* ~~standard~~ for SCCA Sound Control shall be a sound pressure level of 103dB~~b~~ "A" frequency weighted (dBA~~ba~~) measured on the fast response setting at 50 feet (+/- 2 feet) from the edge of the track pavement, and/or artificial markers indicating track edge. *Lower maximum levels may be imposed at specific venues or events. These lower levels shall be noted in the Supplemental Regulations. All sound readings* shall be truncated to the lower whole number. (Anything after the decimal point is ignored.)

Proper location and use of all test instrumentation is essential to obtain valid measurements. Operating manuals or other manufacturer's literature should be referenced for both recommended operation and precautions to be observed.

1. *Acoustic calibration procedures should include extension cable influence.*
2. *Field calibration shall be done at least every four (4) hours while in the operating mode.*
3. *The microphone shall be 3.5 feet (minimum) above the ground surface, 2.0 feet (minimum) above the level of the roadway, no more than 6 feet above the level of the roadway, and two hundred (200) feet or more away from any tunnel or overpass through which the target vehicle passes. Whenever possible it is recommended (but not mandatory) that the microphone shall be located on the outside of the track between the race car and the outside perimeter of the racing facility, aimed into infield areas.*
4. *Weather conditions should be recorded every hour when conditions are unstable, or otherwise every two (2) hours. Meteorological instruments to support sound readings include a barometer (capable of reading 0.1 inches of mercury recommended) and a thermometer, accurate to +/- 1 degree Fahrenheit* ~~*(wet bulb thermometer recommended)*~~*.*

Item 2. Effective 11/1/08: Change section 3.7.2 as follows:

The organizing region will send Official Race Results to the National Office Results *(printed or photocopied or via email)* within five (5) days of the event. Additionally, for national races, the organizing region will send one (1) copy *(printed or photocopied or via email)* to the appropriate Divisional Pointskeeper (including qualifying) within five (5) days of the event. Additionally, the organizers shall provide Official Race Results (printed or photocopied) for each entrant ~~either~~ during the event, or shall either mail photocopied results at the organizer's expense *or e-mail results (at the entrant's option)*, within seven (7) days after the conclusion of the event.

Item 3. Effective 11/1/08: Change section 6.7.4.B as follows:

If the checkered flag is not displayed at the scheduled end of the race (in other words, if a race is one or more laps longer than scheduled), the race shall be scored as if it had ended at the scheduled length*. If the starter becomes aware that one or more cars have passed the finish line after the scheduled end of the race, the starter, with the concurrence of Timing and Scoring and the Operating Steward, may show the checkered flag immediately.*

RECOMMENDATIONS TO THE BoD

None

MEMBER ADVISORIES

The American Sedan Advisory Committee would like to notify the AS community of their intent to continue monitoring the class through the June Sprints. The outcome could result in final adjustments to class specs in the August Fastrack for the Runoffs.

NEW CAR CLASSIFICATIONS

1. 2008 Ford Focus in SSC @ 2,575 lbs (effective 1/1/09) with no rear brake upgrade
2. 74-78 Mazda RX-4 in EP @ 2,100 lbs *2,153 lbs. **2,205 lbs

REFERRED or TABLED

GCR

Accept COMMA licenses (Stephens). Tabled for further discussion.

Touring/Showroom Stock

1. T2 – Allow brake duct kit for the Solstice (Ziegler). Tabled for receipt of parts.
2. T3 – Approve alternate springs for the Subaru (Wannarka). Tabled for further research.
3. T3 – Classify the 2007-08 BMW Z4 3.0 si in T3 (Leithauser). Tabled for further research.
4. T3 — Allow front brake cooling (Quintones). Tabled for receipt of parts.

NOT RECOMMENDED

GCR

1. Mandate race groups (3 letters). Differing track configurations require different race groupings. It is not possible to write a single rule to encompass all of these, thus regions are allowed latitude in this regard.
2. Require a full yellow if a car stops on track (Ingle). There are many situations in which this would be unnecessary and inappropriate.
3. Require cars to follow the pace car if the lights are flashing (Ragaglia). There are too many operational difficulties to make this a mandatory procedure. If an organizing region needs to require this procedure, they may add it to their Supplementary Regulations. However, they would also need to ensure that every driver is aware of the procedure; the consequences of some cars following the pace car and others not could become a serious issue.

Grand Touring

1. GT1 – Reduce the weight of the RX-7 13B to 1,740 lbs (Jung). The car is classified correctly with larger engine choices available.
2. GT3 – Reduce the weight of the Audi GT3 TT to 1,900 lbs (Zlotkin). The car is specified appropriately.
3. GTL – Use chokes and rev limiters instead of SIRs (Gray). Single inlet restrictors will be used to equalize engines where inlet restrictors are required.
4. GTL – Clarify the exhaust routing (Arbogast). The rule is adequate as written.

Production

1. EP – Allow the Mazda RX8 a 9 inch wide wheel (Rivera). We will monitor the car's performance.
2. EP – Declassify the Caterham (Marvin). The car is classified appropriately.
3. HP – Increase compression to 12.0:1 of the Mini (Becker). The car is specified appropriately.
4. HP – Allow the Golf transmission on the Scirocco (Barrack). Alternate transmissions require a weight penalty in Production.
5. HP – Allow stock VW vented rotors for the Scirocco front brakes (Barrack). The brakes are appropriate for the weight of the car.
6. HP – Add 100 lbs to the 1296 Spitfire (Barrack). The weight is adequate as specified.

American Sedan

Adjust the T2 F-body weight to 3,530 lbs (Brannon). The car is specified appropriately.

Touring/Showroom Stock

1. T2 – Allow turbo shielding (Ziegler). Such shielding is inconsistent with the class philosophy.
2. T2 – Reclassify the Lotus Elise to T3 (Aubuchon). The car is correctly classified.

3. SSC – Allow an alternate sway bar for the Toyota Corolla XRS (Peele). The car is specified appropriately and would like to continue to monitor.
4. SSC – Allow 2 degrees of front negative camber (Peele). This is not allowed in SSC.

Spec Miata

Allow any thickness head gasket (Leithauser). The rule is adequate as written.

Previously Addressed

Addressed in Technical Bulletin 08-06 or the June 2008 FasTrack:

1. GT3 – Continue to restrict the 2.0 liter cars (Zlotkin).
2. GT3 – Reduce the weight of the Mazda 3189 cc by 200 lbs (Weaver).
3. HP – Increase the intake valve size of the Mini to 1.406 (Becker).
4. HP – Increase the exhaust valve size of the Mini to 1.219 (Becker).

Addressed in Technical Bulletin 08-05 or the May 2008 FasTrack:

5. FA/CSR – Allow a 36 mm SIR for the 13B peripheral port (Downing).
6. FV – Allow unrestricted grease, oil, etc. (Varacins).

No Action Required

GCR

Include previous wording with spec line changes (Linn). Thank you for your input. When possible, we will do this.

Formula/Sports Racer

FF – Clarify bodywork width behind the centerline of the back axle (Campbell). Section 9.1.1.D.7 is clear on the allowed maximum width and change in width aft of the rear axle centerline. The rules establish the absolute maximum width for bodywork for the entire car. The rules define in absolute terms ("shall not") what is allowable aft of the rear axle centerline. The lateral section (vertical plane) through the rear axle centerline establishes a width at each horizontal section at that longitudinal location on the race car. Those axle centerline widths are the absolute maximum widths for each horizontal section (of the bodywork) aft of the rear axle centerline. Any horizontal section may become narrower, but cannot become wider, than it was at the vertical plane through the rear axle centerline.

Grand Touring

1. GT3 – GT3 rule change input (Jackson). Thank you for your input.
2. GTL – Do not add weight to the open top roadsters (Linn). Thank you for your input.
3. GTL – Spec changes should have at least a 6-month notice (Gray). This is not practical given the varying race seasons around the country.

Production

P – Allow modification of level 1 carburetors (Weber). Modifications are allowed based on drive train modification rules in section 1.A and 2.A.

American Sedan

1. Clarify the classification differences between the SS and Z28 (Corderio). Either car may be brought into AS with the T2 drive train.
2. Clarify the classification differences between the 5.7 L and 6.0 L GTO (Corderio). The 5.7 liter (LS1) and 6.0 liter (LS2) are both eligible with T2 drive train modifications at the specified weight.
3. Clarify if the T2 drive train rules include ancillary systems such as the cooling system (Corderio). See Tech Bulletin 08-06.

Touring/Showroom Stock

1. T3 – Add Brembo Brake Part Numbers to Mustang Spec Line (Smith). The Touring rules allow updating and backdating within the spec line.

2. SSB – SSB class disparity input (Mead). Thank you for your input.
3. SSB – SSB input (Scornavacchi). Thank you for your input.

Spec Miata

Track/wheel spacer/offset input (11 letters). Thank you for your input.

Resumes

None

CLUB RACING TECHNICAL BULLETIN

DATE: June 3, 2008
NUMBER: TB 08-07
FROM: Club Racing Board
TO: Competitors, Stewards, and Scrutineers
SUBJECT: Errors, and Omissions, Competition Adjustments, Clarifications, and Classifications.

All changes are effective 7/1/08 unless otherwise noted.

GCR

1. Add a note to 4.4.3.A.1 p. 24: *(Note: Divisional Licensing Chairmen and regions may issue Novice Permits without a prior medical review unless one or more of the conditions is present that require medical review as specified on the medical form.)*
2. *Change 9.2.1.G.1 p.104 to read: All formula cars registered or homologated with SCCA as of 1/1/1986 must have a front impact attenuation device meeting at lease one of the following criteria:*
3. Change 9.4.5.G.2 p.104 as follows:
   Formula Vee and other formula cars using the VW sedan H-beam front suspension ~~may use the front crush structure specified in~~ *must satisfy the requirements of* section 9.1.1.C.3.A.10 or *use* any of the structures listed in section 9.4.5.G.1.
4. Add to Appendix C.2 p. 138, *13. Dielectric Constant has a tolerance of +0.2.*

Formula/Sports Racer

1. Section 9.1.1.A.5.13 p.189 add as follows: Hoosier R45*,* ~~or~~ R45A*, or R45B* (SCCA Labeled) Compound.

Grand Touring
GT3

1. Engines – TOYOTA, p. 309, add to the 4AG specs: Bore x Stroke (mm) alt. stroke : 85.5mm, Weight (lbs): (1950 w/ alt. stroke). Change the specs to read as follows: Fuel Induction: ~~48mm w/42mm choke(s)~~ Unrestricted.

GTL

1. Engines – DODGE, p. 315, add to the 1715cc specs as follows: Bore x Stroke(mm): Alt. Bore: 81.0, Displ.(cc): 1780, Head Type: Alum, Non-Crossflow, Fuel Induction: 1780cc: 25mm SIR, Weight(lbs): 1780cc @ 1950.

Production

1. Correct section 9.1.5.E.1.b.1, p. 394, by changing the first sentence of the paragraph added in TB 08-05 as follows: **Carburetor *jets,* jet needles, metering rods** and needle valves are unrestricted.
2. Correct section 9.1.5.E.2.b.1, p. 400, by changing the second sentence as follows: **Carburetor *jets,* jet needles, metering rods** and needle valves are unrestricted.

EP

1. BMW 325i/is (E30) (84-91) (excl. conv.), p. 418-419, change the Notes to read as follows: Comp. Ratio limited to 12.0:1, Valve Lift limited to .500". Trunk mounted fuel cell allowed.
2. BMW Z3 2.8L (97-00), classified in TB 08-03, correct the specs to read as follows: Block Mat'l: Iron or Alum.
3. Classify the Mazda RX-4 with Level 2 prep in EP

Add new spec line to PCS-B, p. 424-425, Mazda RX-4 (74-78), Prep. Level: 2, Weight(lbs): 2100 *2153 **2205, Engine Type: Rotary, Bore x Stroke(mm): 13B 6-port, Displ.(cc): 2616, Carb. No. & Type: (1) Nikki 4bbl carburetor w/primary chokes bored to match secondary chokes on a stock manifold or (1) Auto type 2 bbl w/ 38mm choke(s) on a "dual-y" manifold, Wheelbase(in): 99.0, Track (F&R)(in): 60.0 / 59.0, Wheels(max): 15 x 7, Trans. Speeds: 5, Brakes Std.(mm): (F)232 Disc (R)229 Drum, Brakes Alt.(mm): (F)227 Disc, Discs and Calipers from 79-85 12A RX-7, (F) 250 Disc, Discs and Calipers from 84-85 RX-7 GSL-SE, Notes: Level 1 dry sump, intake manifold porting permitted. Any 86-95 rotor housings permitted.

4. Mazda RX-7 (12A/13B) (79-85), p. 424-425, add to the specs as follows: Notes: Any 86-95 rotor housings permitted.
5. Mazda RX-7 (13B) (86-91), p. 424-425, add to the specs as follows: Notes: Any 86-95 rotor housings permitted.

HP

1. BLMI Austin/Morris Mini Cooper (level 1 suspension/level 2 engine), p. 454-455, add to the specs as follows: Carb. No. & Type: (1) 1.75" SU, Notes: Alternate intake manifold #CAM-6618. Change the specs to read as follows: Track (F/R)(in): 53.0 / 53.0.
2. Volkswagen Rabbit 1588 (includes Cabriolet / convertible), p. 460-461, change the Notes to read as follows: Comp. Ratio limited to 11.5:1, Valve lift limited to .450".
3. Volkswagen Rabbit 1715 (81-84) (excl. conv.), p. 460-461, change the Notes to read as follows: Comp. Ratio limited to 11.5:1, Valve lift limited to .450".
4. Volkswagen Scirocco 1457/1471, p. 462-463, change the Notes to read as follows: Comp. Ratio limited to 11.5:1, Valve lift limited to .450". Only the 1457cc engine may use fuel injection.
5. Volkswagen Scirocco 1588, p. 462-463, change the Notes to read as follows: Comp. Ratio limited to 11.5:1, Valve lift limited to .450".

6. Volkswagen Scirocco 1715 (81-84), p. 462-463, change the Notes to read as follows: Comp. Ratio limited to 11.5:1, Valve lift limited to .450".

Showroom Stock

SSB

1. Chevrolet Camaro V-6 (96-02), p. 491, add to the specs as follows: Notes: GM 1LE front (#26032907 32mm) and rear (#10021221 21 mm) sway bar allowed.
2. Pontiac Firebird V-6 (96-02), p. 492, add to the specs as follows: Notes: GM 1LE front (#26032907 32mm) and rear (#10021221 21 mm) sway bar allowed.
3. Mazda MX-5 / Miata Sport (99-00), p. 491, add to the specs as follows: Notes: Spec Miata front and rear sway bar permitted. Rear sway bar must use middle hole.
4. Mazda MX-5 / Miata Sport (01-05), p. 492, add to the specs as follows: Notes: Spec Miata front and rear sway bar permitted. Rear sway bar must use middle hole.
5. BMW Z4 2.5L (03-05), p. 490, change the first sentence of the Notes to read as follows: Throttle restrictor between throttle body and plenum is mandatory: .06" flat steel plate with one (1) ~~51.0mm~~ *53.0* hole.

SSC

1. Saturn SC2 Coupe (97-00), p. 496, change the specs to read as follows: Weight(lbs): 2475.
2. Saturn SC2 Coupe (01-03), p. 497, change the specs to read as follows: Weight(lbs): 2300.
3. Honda Civic Si (02-03), p. 495, change the specs to read as follows: Weight(lbs): 2500.

Sports Racer

CSR

1. Section 9.1.9.G.13 p.559 add to the section as follows: Hoosier R45*,* ~~or~~ R45A*, or R45B* (SCCA Labeled) Compound.

Touring

T1

1. Chevrolet Corvette C6 Coupe (05-07), p. 575, change the alternate thermostat part number listed in the Notes as follows: Lingenfelter Performance Engineering #L310055204 ~~Hypertech #1015~~.
2. Chevrolet Corvette (2008), classified in TB 08-01, **Effective on publication 6/20/08**, add to the specs as follows: Notes: Alternate GM oil pan #12630477 allowed.

T2

1. Acura TL Type S, (07-08), classified in TB 08-01, add to the specs as follows: Notes: H&R front springs #180-60-180, rear springs #120-60-320, and rear sway bar Progressive Technology #62.0110 allowed.
2. Chevrolet Cobalt SS (2008), classified in TB 08-01, change the specs as follows: Notes: ~~39mm~~ *38mm* Turbo inlet Restrictor required.
3. Chevrolet HHR SS (2008), classified in TB 08-01, change the specs as follows: Notes: ~~39mm~~ *38mm* Turbo inlet Restrictor required.
4. Pontiac Solstice GXP (07-08), p. 582, change the last sentence of the Notes as follows: ~~39mm~~ *38mm* Turbo inlet Restrictor required.
5. Porsche Boxster S (00-03), p. 582, change the specs to read as follows: Weight(lbs): 2880.
6. Subaru Impreza WRX STi (03-06), p. 582, add to the specs as follows: Notes: AMS front and rear springs #AMS-SCCA01 allowed.

T3

1. Subaru WRX TR (06-07), p. 585, add to the specs as follows: Notes: Koyo Radiator #KOY-R2704, Mocal oil sandwich plate #OTSP1M18X, and Earl's oil cooler #22510ERL allowed. AMS front and rear springs #AMS-SCCA01 allowed.

ST

1. Chevrolet Corvette C6 Z06 (06-07), p. 586, **Effective on publication 6/20/08**, add to the specs as follows: Notes: Alternate GM oil pan #12611803.

CLUB RACING TECHNICAL MEMO

NUMBER: RM08-07
DATE: June 11, 2008
FROM: National Staff
TO: All Participants
SUBJECT: Willans Harness Labeling Misprint

Please note that Willans released a number of harnesses with misprinted labels. The affected batch numbers are between 4844 and 5182. See below for identification of the incorrect/correct version:

Incorrect Version	Correct Version
FIA B-108.T/98	FIA D-108.T/98
FIA B-109.T/98	FIA D-109.T/98
FIA B-110.T/98	FIA D-110.T/98
FIA D-112.T/98	FIA B-112.T/98

Heartland Park Topeka Held Under 2008 GENERAL COMPETITION RULES
SANCTION # IDC-08-S **PLEASE PRINT CLEARLY**
This information will be printed in the Driver Manual, Entry list and Tech Card.

****ONLINE REGISTRATION AVAILABLE AT WWW.SCCA.COM****

1. Enclose entry fee of **$360** payable to SCCA Inc.; check, money order, Visa/Mastercard accepted. Entry fee includes a $10 process fee
2. Mail entry form and fee to **SCCA Runoffs, Attn: Club Racing, PO Box 1833, Topeka, KS 66601** or **FAX (785) 232-7214**. Faxed entries accepted with credit cards only. Online entries accepted with credit card only.
3. Entry must be officially postmarked, faxed or completed online no later than the **DEADLINE** date of **Sept. 5, 2008**.
4. Entry fee will be refunded if your entry is not accepted or if you withdraw in writing by Sept. 8, 2008. If you withdraw Sept. 6-Oct. 5. your entry fee minus $175 will be refunded. No refunds will be issued after Oct. 5.
5. Entry fee for entries postmarked after Sept. 5, 2008 is **$560** (including $10 processing fee.

ENTRIES WILL NOT BE ACCEPTED PRIOR TO JULY 8, 2008.

DRIVER: _____ License #: _____ Exp Date: _____ Region: _____

Address: _____ City, State, Zip: _____

Phone: Home ( )_____ Cell ( )_____ Email:_____

CAR CLASS:_____ Number Preference: 1:_____ 2:_____ 3:_____ 4:_____ 5:_____ 6:_____

Assigned in order received. #1 is reserved for defending National Champion

Sponsor **(Limited to 35 characters including spaces/punctuation):**_____

ALL OF THE INFORMATION IN THIS SECTION MUST BE FILLED OUT IF REQUIRED FOR YOUR CLASS. PER SUPPLEMENTAL REGULATIONS 1.3., INCOMPLETE ENTRIES ARE CONSIDERED INVALID AND WILL BE RETURNED.

Car Make:_____ Model:_____ Year:_____ Color:_____

Transponder: _____ Logbook: _____ Official Weight: _____ Displacement:_____

Spec Page:_____ VIN #: _____ Homologation: _____

SS/T/SM **F/SR**

GCR Track (F&R): _____ Alternate Heads **(GT1/FC/S2)**: Yes ☐ No ☐ Wheel Width **(GT1)**: 10" ☐ 12-13" ☐

SS/P/GT

Wheel Size **(GTL)**: 13" ☐ 14-15" ☐ IRS Penalty **(GT2, 3, L):** Yes ☐ No ☐ Fuel Injection **(CSR/FA)**: Yes ☐ No ☐

Drivetrain **(DSR)**: Chair or Belt ☐ Other ☐ Engine Make **(CSR/DSR/FA/F500)**: _____

Transmission:

GT1: Prod based 4 spd ☐ Sequential ☐ Neither ☐ **GT2, 3, L:** Sequential ☐ Synchromesh ☐ Neither ☐

Prod: Stock ☐ Stock-Type ☐ Non Stock-Type ☐ **FA:** Sequential ☐ Non-Sequential ☐

ENTRANT: _____ Membership #: _____ Exp Date: _____

(ENTRANT MUST BE DIFFERENT FROM DRIVER & MUST BE A SCCA MEMBER.)

CREW: **Only Driver/Entrant may add/change crew. Overcrew passes will be available at the track. DO NOT LIST YOUR ENTRANT ABOVE AS CREW!**

Free _____ Free _____ Free _____

EMERGENCY CONTACT:_____ Phone #: _____ This person is at track? ☐

PAYMENT Check/Money Order #_____ Visa/Mastercard: _____ Exp _____

DRIVER BIO ***Optional*** - Please feel free to submit a media kit/press clippings with your entry or drop them off during the event at Driver Info in the Timing Bldg.

Date of Birth_____ Age_____ Hometown (City you want listed on results)_____ Division_____

Occupation_____ Single ☐ Married ☐ Spouse's Name_____

Children's Names and Ages_____ Head Mechanic/Crew (if applicable) _____

RACING HISTORY **Please be specific** First time to the Runoffs? Yes ☐ No ☐

When & how began racing_____

Other racing experience (i.e. Karts, Circle Track, AMA, Pro Racing) _____

Any series championships won (year/class/type/series) _____

Current track records held (include year, set, class) _____

Best Runoffs finish (position/class/year) _____

Top-Six Runoffs finishes _____ Top-Ten Runoffs finishes_____

Unusual happenings during 2008 season_____

The Entrant agrees to permit the Sports Car Club of America Inc., SCCA Pro Racing Ltd. and their assigns (including but not limited to series sponsors, promoters/organizer of an Event), free of any charges duties or fees, to use, license, reproduce, have reproduced, show, have shown, without limitation in space or time, all soundtracks, photographs, drawings, trademarks, films/video pictures concerning competitors, their drivers, teams or cars involved in the event(s) on any medium whatsoever for any documents, reports, coverage, broadcast, program, publication, video game or model production, software, etc. whether past, present or future. The Entrant further acknowledges and agrees that SCCA and/or SCCA Pro Racing may freely assign or license its rights to a third party.

It's agreed and understood that the undersigned driver and the car described above will appear at the above described race meet if the entry is accepted by the SCCA. The undersigned agree to compete under and be bound by the SCCA General Competition Rules and the Supplementary Regulations and certify that automobiles entered comply with provisions of the GCR. All participants must sign release agreements at registration.

I am a member in good standing of the SCCA and my Region and hold a valid SCCA National Competition License.

I am a member in good standing of the SCCA and my Region.

_____ _____

Driver's Signature ***Entrant's Signature***

COURT OF APPEALS

JDGMENT OF THE COURT OF APPEALS
Roger Glover vs. SOM, COA Ref. No. 08-03-NP
May 2, 2008

FACTS IN BRIEF
At the Gathering of Champions Double National Race at Thunderhill Raceway Park on Saturday, March 15, 2008, Chief Steward Richard Templeton filed a Request for Action (RFA) against Roger Glover (FA #21) and a second RFA against Edd Ozard (FA #1). The RFAs requested that the Stewards of the Meeting (SOM) review the body contact between the two cars at Turn 2 during Race Group 1 as Mr. Ozard was attempting to pass Mr. Glover. The Stewards of the Meeting (SOM) Clint DeWitt, Paul Helberg, Gary Pitts, and Skip Yocom, Chairman, heard testimony from both drivers, reviewed a corner worker report, and concluded both drivers were at fault under GCR 6.8.1. Both were issued reprimands. Mr. Glover is appealing his reprimand.

DATES OF THE COURT
The Court of Appeals (COA) David Nokes, Fred Cummings, and Bob Horansky, Chairman, met on April 17, 24, and May 1, 2008 to hear, review and render a decision on the appeal. Dick Templeton, regular COA member, was recused from the deliberations and decision.

DOCUMENTS AND OTHER EVIDENCE RECEIVED AND REVIEWED
1. Letter of Appeal from Roger Glover, including new witness statements and a video, received April 15, 2008.
2. Official Observer's Report and related documents, received April 15, 2008.
3. Email statement from Gary Pitts, received April 21, 2008.
4. Official Race Log of Group 4 Race, received April 18, 2008.
5. Copy of the RFA against Edd Ozard, received April 18, 2008.
6. Testimony by Skip Yocom, heard April 24, 2008.

FINDINGS
During the Group 1 Race on Saturday, March 15, 2008, after a long full course yellow period, racing resumed at Lap 5. FA #21, driven by Roger Glover, was in the lead followed by FA #1, driven by Edd Ozard. As they approached the left hand Turn 2, Mr. Ozard attempted to pass Mr. Glover on the left headed toward the apex. The cars made contact with car #1 ending up on top of car #21, and with both cars coming to rest off course. The SOM, after hearing statements from both drivers and a corner worker, concluded there was shared fault for this incident under GCR 6.8.1 (On Course Driver Conduct), and reprimand both drivers.

Later in the day, it was discovered that the 4th place car in the race had a video of the incident. The SOM viewed it but did not alter their decision.

Mr. Glover's appeal contends that Mr. Ozard did not get sufficiently along side him before the apex to be considered executing the pass, and that there was not shared fault. The video, provided as new evidence with his appeal, supports this contention. Additionally, recorded in the corner worker statement and race log was a statement of an attempted unsafe pass. An additional statement from DSR #13 driver Kevin Mitz, who was following Mr. Ozard into this corner, also supports the appellant's position.

DECISION
The Court of Appeals upholds Mr. Glover's appeal and overturns his reprimand. Mr. Glover's appeal is well founded and his appeal fee, less the amount retained by SCCA, will be returned.

COURT OF APPEALS

JUDGMENT OF THE COURT OF APPEALS
Chris Keller vs. SOM, COA Ref. No. 08-04-NP
May 2, 2008

FACTS IN BRIEF
At the Gathering of Champions Double National Race at Thunderhill Raceway Park on Sunday, March 16, 2008, Chris Keller, driver of FF #1, filed a mechanical Protest against the car of Alex Schutte, FF #44, specifying 15 items to be checked for compliance. The disassembly and inspection processes, location, teardown bond and apportionment were negotiated and agreed to in writing by both parties. The engine and engine box were sealed. The protested cam was shipped to Jeremy Thoennes, SCCA Technical Services Manger, to be checked for compliance.

On Friday, March 21, 2008, the disassembly and teardown were conducted by Huffaker Engineering within the agreement under the supervision of SOM Gary Pitts and National Scrutineer Morris Hamm.

The Stewards of the Meeting (SOM) Clint DeWitt, Paul Helberg, Gary Pitts, and Skip Yocom, Chairman, received the inspection reports from Mr. Pitts, Mr. Hamm, and Jeremy Thoennes and on Tuesday, March 25, 2008, notified Mr. Keller and Mr. Schutte that the engine was found compliant on all 15 specified items.

Mr. Keller is appealing the determination of compliance, questioning the inspection process of the pistons, specifically for the presence of gas porting modifications and changing of the cam grinding on the piston skirt.
.

DATES OF THE COURT
The Court of Appeals (COA) David Nokes, JoAnne Jensen, and Bob Horansky, Chairman, met on April 10, 17, 24, and May 1, 2008 to hear, review and render a decision on the appeal. Dick Templeton, Chief Steward at the event and regular COA member, was recused from the deliberations and decision.

DOCUMENTS AND OTHER EVIDENCE RECEIVED AND REVIEWED

1. Letter of Appeal from Chris Keller, including correspondence from Jay Ivey; citation from the Stewards Manual and Guidelines; material from a 2008 SCCA National Convention presentation on Mechanical Protest procedures; Witness Statements from Peter Nosler and Neil Porter (owner of FF #1); and various email exchanges between Gary Pitts and Peter Nosler as well as between Neil Porter and Gary Pitts, all received April 7, 2008.
2. Official Observer's Report and related documents, received April 7, 2008.
3. Email statement from Chief Steward Dick Templeton, received April 8, 2008.
4. Mechanical Protest and Witness Statement from Chris Keller, along with written statements reporting the results of the teardown from Gary Pitts, Morris Hamm, and Jeremy Thoennes, received April 7, 2008.
5. Statement from Alex Schutte, driver of FF #44, received April 7, 2008.
6. Statement from Jon Brandstad, owner of FF #44, received April 10, 2008.
7. Statement from Carl Schutte, entrant for FF #44, received April 15, 2008.
8. Email statement from Gary Pitts, received April 14, 2008.
9. Email statements from Gary Pitts and from Club Racing Vice President Terry Ozment, received April 7 and 14, 2008 respectively.
10. Testimony from Skip Yocom heard April 24, 2008.

FINDINGS
The engine and engine box sealing, disassembly and inspection were conducted properly and in accord with the GCR, with proper protocols, and with agreement among the parties. The engine was, in all 15 respects, found to be compliant. The compliant parts, with the exception of the cam, were returned to Mr. Schutte prior to the expiration of the appeal period.

The specific request for shipping the pistons to a third party for inspection was raised by Mr. Keller after the Protest was filed and bond posted, and is therefore beyond the scope of and not covered by the original Protest. It was Mr. Keller's responsibility to have outlined the particular process for inspecting the pistons during the negotiation of the disassembly and inspection and teardown bond.

It should be noted that the pistons were inspected, compared to a known compliant exemplar provided by Neil Porter, owner of FF #1, and were found compliant. All expected markings were present, no non-compliant modifications were evident, and all measurements were within specifications.

DECISION
The Court of Appeals denies Mr. Keller's appeal. The Court finds Mr. Keller's appeal is well founded and his appeal fee, less the amount retained by SCCA, will be returned.

COURT OF APPEALS

Judgment of the Court of Appeals
Rick Johnson vs. SOM COA 08-05-NP
May 29, 2008

PRIOR PROCEEDINGS AND FACTS IN BRIEF

Following National Race Group 2 at the Fluge Global Adventures National held May 4, 2008 at Portland International Raceway, Rick Johnson, driver of S2000 #25, protested William Bachofner, driver of S2000 #36, for violation of GCR 5.9.3 (failure to report to impound) and Oregon Region Supplementary Regulation 9b (Finishing Procedures). The Stewards of the Meeting (SOM) Jim Graffy, Tom Masterson and John Martinsen, Chairman, met and determined that the protest should be disallowed. Mr. Johnson is appealing that decision.

DATES OF THE COURT

The National Court of Appeals (COA) David Nokes, Richard Templeton and Robert Horansky, Chairman, met on May 22 and 29, 2008 to hear, review and render a decision on the appeal.

DOCUMENTS AND OTHER EVIDENCE RECEIVED AND REVIEWED

1. Mr. Johnson's appeal and accompanying documents received May 21, 2008.
2. Official Observer's Report and related documents including protest documents received May 21, 2008.
3. Verbal testimony from Howard Allen, Assistant Chief Steward/Operating at the event, heard May 22, 2008.

FINDINGS

The race group in question inadvertently ran one extra lap – 24 instead of the scheduled 23. Car #36 (Mr. Bachofner) was leading at the conclusion of lap 23, but had a mechanical failure soon after beginning lap 24. Car #36 pulled off course as the field passed him by.

At the conclusion of the race, car #36 was towed to its paddock space adjacent to the impound area. The driver did not report to impound because he thought he did not need to since he finished last in class and was not among the top three finishers in class. An Assistant Chief Steward, Tech was instructed to tell the driver of car #36 that he remained a finisher even though he had not completed the race.

Subsequently, the extra lap error was discovered and the results reverted to the previously scored lap per GCR 6.7.4.B; this made car #36 the winning car in S2000. The revised results were announced as the cars were being dismissed from impound. After being informed of his finishing position, car #36 was brought to impound where it was weighed.

The SOM determined that car #36 had not gone directly to impound but rather to his paddock space due to the actions of officials, and that the driver should not be penalized for the actions of officials. The SOM disallowed the protest, but considered it well-founded and returned Mr. Johnson's protest fee.

DECISION

The Court of Appeals upholds the decision of the SOM in its entirety. GCR 5.9.3.C. clearly states that failure of a top-three finisher in class to report to impound may be penalized. The First Court acted within its powers and made a proper decision.

Mr. Johnson's appeal is well-founded and his appeal fee, less the amount retained by SCCA, will be returned.

COURT OF APPEALS

JUDGMENT OF THE COURT OF APPEALS
Steve Sliwa vs. SOM, COA Ref. No. 08-06-SE
June 9, 2008

FACTS IN BRIEF
At the National Race at Daytona on Saturday, May 3, 2008, Carlos Lira (T2 #5) protested Steve Sliwa (T2 #71) for violating GCR 2.1.7 (unsportsmanlike conduct) and 2.1.8 (physical violence towards another participant) stating that Mr. Sliwa made gestures toward Mr. Lira and threw water bottles toward him in the garage area. The Stewards of the Meet (SOM) upheld the protest and suspended Mr. Sliwa's competition license for 6 months, followed by three-event probation, and assessed 6 penalty points against his license. Mr. Sliwa is appealing that decision.

DATES OF THE COURT
The Court of Appeals (COA) David Nokes, Dick Templeton, and Bob Horansky, Chairman, met on May 22, 29 and June 5, 2008 to hear, review, and render a decision on the appeal.

DOCUMENTS AND OTHER EVIDENCE RECEIVED AND REVIEWED
1. Letter of Appeal from Steve Sliwa, received May 22, 2008.
2. Official Observer's Report and related documents, received May 22, 2008.
3. Email statement to COA from SOMs Sandy Jung and Norm Esau dated May 24, 2008.
4. Email statement to COA from Russ Smith, Chairman SOM, dated May 28, 2008.

FINDINGS
On Saturday morning May 3, 2008, Steve Silwa protested three T2 cars for being fitted with noncompliant brakes. One of the cars protested by Mr. Sliwa was driven by Carlos Lira. Saturday afternoon there was an exchange between Mr. Lira and Mr. Sliwa as Mr. Lira and others drove by Mr. Sliwa's paddock. During this exchange, Mr. Sliwa allegedly threw a partially filled water bottle in the direction of the Lira party and made a gesture commonly interpreted to be disrespectful. The bottle fell on the pavement and did not hit anyone. Mr. Lira protested Mr. Sliwa for violating GCR 2.1.7 and GCR 2.1.8.

The facts are not entirely clear as there were no independent witnesses; all who testified were affiliated with one party or the other. Mr. Sliwa, however, did admit to throwing a partially filled water bottle in the direction of Mr. Lira and making a disrespectful gesture. No testimony was presented that indicated any other threat or unsportsmanlike conduct by Mr. Sliwa.

Mr. Sliwa did not appear before the SOMs on Sunday as requested so he could be informed of the SOM decision; instead he left the track before the protest hearings were completed.

DECISION
The Court of Appeals upholds the SOM decision but modifies the penalty by removing the 6 month suspension. The COA judged the penalty to be more severe than is warranted by the offense. The three race event probation stands, beginning with the receipt date by SCCA of Mr. Sliwa's competition license, and he will be assessed three penalty points. Mr. Sliwa's appeal is well founded and his appeal fee, less the amount retained by SCCA, will be returned.

COURT OF APPEALS

JUDGMENT OF THE COURT OF APPEALS
Steven Gorriaran vs. SOM, COA Ref. No. 08-07-NE
June 9, 2008

FACTS IN BRIEF
At the Granite State National Race at New Hampshire Motor Speedway on Sunday, May 4, 2008, Chief Steward Peter Roberts issued a Chief Stewards Action (CSA), disqualifying Steven Gorriaran (SM #44) for non-compliant fuel found at post race impound in violation of GCR Paragraph 9.3.25.A (Fuel Standards). Mr. Gorriaran protested the CSA, and the Stewards of the Meeting (SOM) Tom Hoffman, Jim Poor, Bob Thomas and A. G. Robbins, Chairman investigated the fuel test results, observed a re-test, and disallowed the protest. Mr. Gorriaran is appealing this decision.

DATES OF THE COURT
The Court of Appeals (COA) David Nokes, Dick Templeton, and Bob Horansky, Chairman, met on May 22, 29 and June 5, 2008 to hear, review and render a decision on the appeal.

DOCUMENTS AND OTHER EVIDENCE RECEIVED AND REVIEWED

1. Letter of Appeal from Steven Gorriaran, including new witness statements, received May 22, 2008.
2. Official Observer's Report and related documents, received May 22, 2008.
3. Additional Email statement from Steven Gorriaran to SCCA dated May 20, 2008, received May 22, 2008.
4. Statements from A.G. Robbins, Chairman SOM, received May 27, 2008 and June 2, 2008.
5. Testimony of Tom Hoffman, SOM, heard May 29, 2008.
6. Statement from Bob Thomas, SOM, received May 29, 2008.
7. Statement from Peter Roberts, Chief Steward, received May 30, 2008.
8. Fuel test report from Chempro, Inc. received June 2, 2008.
9. Statement from Scott Dowd, Chief Scrutineer, received June 2, 2008.

FINDINGS
Following the Group #1 race for SM on Sunday, May 4, the fuel of the top three finishers was tested at impound. Two of the three cars were found not in compliance having DC readings above 15, and were disqualified by Chief Steward Peter Roberts at approximately 10:30 am. Both drivers protested. One driver later withdrew his protest. The protest by Steven Gorriaran, SM #44, was heard by the SOM who called for and observed a retest, which was performed at approximately noon on a second drawn fuel sample. It too was found noncompliant. The SOM disallowed the protest.

A fuel sample was also retained and, under SCCA direction, was sent to an independent laboratory (Chempro) for analysis. The COA noted the results of the Chempro laboratory report on the analysis of the fuel from car #40. The report indicated no unexpected properties of the fuel, but due to the time delay from the time the sample was drawn to the receipt of the sample for testing, as well as the unknown shipping situation, the COA did not consider this information pertinent to this decision

Mr. Gorriaran's appeal is based on the contention that several violations of the fuel testing procedure were evident. His appeal contained documentation of the hourly weather and temperatures in Loudon, NH for the race morning, showing that the maximum temperature was 45 degrees under light rain. A copy of the calibration certificate for the HDE Model G-01 used for the test showed that the meter was three months beyond the required annual re-calibration date. Also included in the appeal was a statement and documentation from Precision Fuel Testing, the supplier of the HDE G-01 Fuel Analyzer, regarding the need for annual recalibration, and the inaccuracy of readings below 50 degrees. Precision Fuel also emphasized the importance of the fuel being tested, as well as the cyclohexane zeroing fluid temperatures, being within 5 degrees of each other in order to obtain accurate readings.

The COA noted that the published repeatability specification of the G-01 analyzer is 0.1. The three readings taken immediately after the race had a variation of 0.8, as did the three additional ones taken later. There was no evidence of any temperature measurements taken to assure the fuel and zeroing fluid were within the prescribed range.

DECISION
The Court of Appeals upholds Mr. Gorriaran's appeal and overturns his disqualification. The environmental temperatures during testing, meter calibration, and other deviations from the prescribed test procedure raise questions about the validity of the tests. Mr. Gorriaran's appeal is well founded and his appeal fee, less the amount retained by SCCA, will be returned.

SOLO EVENTS BOARD MINUTES

SOLO EVENTS BOARD |SPORTS CAR CLUB OF AMERICA, INC.| *May 31-June 1, 2008*

The Solo Events Board met in Kansas City May 31-June 1. Attending were SEB members Dave Whitworth, Tina Reeves, Steve Wynveen, Erik Strelnieks, and Donnie Barnes; Lisa Noble of the BOD; and Howard Duncan, Brian Harmer and Doug Gill of the National Staff. These minutes are presented in topical order rather than the order discussed.

Unless noted otherwise the effective date for all rule, class, and listing change proposals herein is 1/1/2009.

GENERAL

·For 2008, SCCA wants to emphasize the importance of Solo site acquisition. During the National Convention, with support of the National Staff, the Site Committee announced the "SITE REWARD PROGRAM". Any Region that obtains a new Solo site will be refunded up to $200 of the sanction fee for the first event at the new site. Also, any Region may nominate a member who has done outstanding work with site acquisition and some of the best of these will be awarded free membership at their next renewal date. Contact Nancy Downing at the National office to submit your application for a reward.

·The previously-published proposal regarding tire heating (6.11) has been withdrawn.

- The SEB is seeking nominations from the membership for the Driver of Eminence and Solo Cup awards. These awards will be presented at this year's Solo National Championships in Topeka.
- Vacancies on the SEB are anticipated for 2009. Interested members are invited to submit their qualifications in writing to the National Office.
- A Divisional Solo Events Steward is needed for the Central Division. Duties of this position are outlined in Introductory Section I.3 of the Solo Rules.
- The SEB has appointed a National Appeals Committee (NAC), per Section 10.4 of the Solo Rules. The current members are Art Trier (Chair), Paul Brown, Neal Bellamy, GH Sharp, and Marcus Merideth (alternate). Members are reminded that the decisions of the appointed NAC are final, per Section 10.5.
- The SEB thanks Jamie Cicalese for his service to the Site Committee.

SAFETY

- The SSC has recommended the following rule change proposal, which is being published for member feedback:

  Replace the contents of Appendix E subsection V.E. with: "Effective 1/1/09, following an initial one-year licensing as a SSS, the SCCA Central Licensing Department shall issue a renewal application every three years, pending completion of the appropriate number of events and continuing education as a Solo Safety Steward. All requests for such renewals shall be made by submitting a renewal application with the appropriate number of events and the continuing education class date recorded in the application. During each three-year licensing period, the SSS must participate in one continuing education seminar and serve as a SSS at five events. The DSS shall be responsible for confirmation of participation in the continuing education process. The renewal date is the same as membership renewal."
- Regions are reminded that the passenger rule (1.3.2.C) is not to be abused, and is intended to be used for instructional purposes.

TIRE RACK SOLO NATIONALS

- The SEB Town Meeting will be held Sunday of Nationals week, after the end of the warmup events, at the Pavilion at Heartland Park.
- Michael Feldpusch will be an assistant course designer for the 2008 Solo Nationals.
- Additional Impound inspection item proposals, possibly including displacement checks in Prepared, compression checks in SP, and valve cover removal and differential inspections in ST, were reviewed by the SEB.

STOCK

- Per the SAC, as new car technologies become available it is anticipated that classifications in Stock will follow. A class may as a by-product of improving technology become faster as time passes. (ref. 08-256)

- The previously-published rule change proposal regarding battery hardware is being recommended to the BOD. It is repeated here for reference purposes: Add to 13.9 as follows: "Additional battery hold-down hardware may be added. It may serve no other purpose." (ref.07-397)
- The following class listing change proposal has been recommended by the SAC and are being published for member feedback:

  Move from GS to HS: Honda Civic del Sol VTEC (ref. 08-132)

- For 2009 the SAC proposes moving the following models to G Stock as a group:

  Audi TT FWD
  Dodge SRT-4
  Dodge Caliber SRT-4
  Dodge Daytona IROC R/T
  Honda Prelude (97+)
  Mazdaspeed Protege
  Mitsubishi Eclipse (06+)
  Mitsubishi Eclipse Turbo AWD / Eagle Talon Turbo AWD
  Nissan Maxima (04+)
  Oldsmobile Calais W41
  Saturn Ion Redline
  Volvo S60R
  Volvo V70R

- For 2009 the SAC requests comments on the following independent class change proposals:

  Cobalt SS Supercharged to GS
  Cobalt SS Turbocharged to GS
  Mazdaspeed 3 to GS
  Lotus Elise SC to SS
  Dodge Viper 08+ to SS
  Lotus Exige S to SS
  Porsche 996 Turbo to SS
  Acura Integra Type R to BS

- The SAC is going to propose changes for 2010 in an upcoming Fastrack. The final proposal is not completed but most classes will be affected by a designation change (class letters). A few classes will have significant proposals for the membership to consider.

STREET TOURING

- The following rule change proposals have been submitted by the STAC and are being published for member feedback:

  - Replace Section 14.6.A (STS/STS2) with:

  "Cross-drilled and/or slotted brake rotors may be fitted (same size/type/material as standard) provided all such voids are within the disc area, and comprise no more than 10% of that area." *Comment*: This modifies the existing STS/STS2 allowance by limiting the amount of "swiss cheesing" for weight loss to amounts typical of off-the-shelf aftermarket tuner parts.

  - Replace Section 14.12.7 (STX/STU) with:

    "Non-standard brake rotors may be used provided they are of equal or larger dimensions (diameter and thickness) and made of ferrous material (e.g. iron). Aluminum rotor hats are allowed. Cars originally equipped with solid (non-vented) rotors may utilize vented rotors. Cross-drilled and/or slotted brake rotors may be fitted provided all such voids are within the disc area, and comprise no more than 10% of that area.

    Brake calipers and mounting brackets may be replaced provided they bolt to the standard locations and the number of pistons is equal to or greater than standard.

    Drum brakes may be replaced with disc brakes of a diameter equal to or greater than the inside diameter of the standard drum. Such conversions must be bolted, not welded to the axle/trailing arm/upright.

    Changes to backing plates/dust shields/brake lines to accommodate these changes are permitted but may serve no other purpose."

    Comment: This change is only for the existing STX/STU big brake allowance, and adds a restriction limiting 'swiss cheesing'."

STREET PREPARED

- The SPAC has submitted the following rule change proposals for member comment:

  - Replace 15.6 with the following:

    15.6BRAKES

    Vehicles may only exceed the allowances of 13.6 as specified herein.

    A. Any brake line, single or dual master cylinder, vacuum brake booster, or brake proportioning valves may be used. This does not allow multiple separate cylinders, but does allow for any single, dual-circuit cylinder.

    B. "Safety brakers" and units such as the "Brake Guard System" are permitted.

C. ABS braking systems may be disabled, but not removed; brake boosters may be removed, modified, substituted, or added.

D. Alternate brake rotors are permitted, subject to the following restrictions:

1. Rotors must be ferrous metal except for standard parts. Aluminum rotor hats are allowed. Rotor dimensions (diameter and thickness) must be equal to or greater than standard parts. Cars originally equipped with solid (non-vented) rotors may utilize vented rotors.

2. Cross-drilled and/or slotted brake rotors may be used. Slots/holes are permitted only in the braking area of the rotor. Rotors featuring a drum-type parking brake in the hat area of the rotor may not be drilled/slotted in the parking brake area.

E. Drum brakes may be replaced with disc brakes. Disc brake rotors for such a conversion must be equal to or greater in diameter than the inside diameter of the standard brake drum. Changes to backing plates/mounting brackets/brake lines to accommodate this change are permitted but may serve no other purpose. Drum-to-disc brake conversions must be bolted, not welded to the axle/control arm/upright.

F. Air ducts may be fitted to the brakes, provided that no changes are made in the body/structure for their use. They may serve no other purpose. Backing plates and dirt shields may be modified or removed.

G. A functional, redundant emergency (parking) brake must be present.

H. Brake calipers may be replaced, provided the number of pistons is equal to or greater than the original number of pistons. Caliper mounting brackets may be replaced to accommodate this change, but may serve no other purpose. Alternate caliper brackets must bolt to the original caliper bracket mounting location(s).

- Replace the content of 15.2.F with the following:

  "The driver and front passenger seats may be replaced, with the following restrictions: Seats must be securely mounted per 3.3.3.B.2. The seating surface must be fully upholstered.

  Any replacement seat must be a full back, bucket type automobile seat incorporating a functional headrest. Kart seats & low back dune buggy seats and other similar types of seat are expressly prohibited. Cars may have no fewer than the standard number of seats. The seat tracks are considered part of the seat and may be substituted. Alternate seat tracks may serve no other purpose. The standard seat belts may be removed to facilitate the installation of alternate restraints complying with safety requirements."

- Per the SPAC, the previously-published proposal to move '94-'99 Neons to FSP has been amended to combine them onto a single line (SOHC and DOHC models) in FSP as follows: "Dodge/Plymouth Neon, 1994-1999, all." This is being recommended to the BOD.

- The following class listing change proposals have been submitted by the SPAC and are published for member comment:

  - Move from DSP to FSP:

    Honda Civic ('99-'00)

  - Add to DSP (ref. 08-264):

    Subaru Legacy/Outback 98-04 6-cyl (all)
    Subaru Legacy/Outback 03-present 6-cyl (all)

  - Move from DSP to FSP (ref. 08-214):

    Nissan Pulsar/NX2000, Sentra & SE-R, 1991-1994, all

PREPARED

- The following rule change proposals have been recommended by the PAC and are being submitted for member comment:

  - Change subsection 1.b under Prepared Class X in Appendix A to read as follows:

    "b. Front hoods, engine covers, trunk lids, hatches, front fenders, rear fenders not part of chassis structure (unibody), front & rear facias, and side skirts may be modified or replaced, and may be attached with removable fasteners. Associated hardware including latches, hinges, and window washer nozzles may be modified, removed, or replaced. Fenders may be flared as per Prepared (17.2.L, 17.2.M), non-metallic fender liners may be modified, replaced, or removed. Body panels may be attached with removable fasteners (e.g. Dzus)."

  - Add the following to 17.2.F after the third sentence:

    "This requires a sealed firewall between engine and passenger compartment. This rule is for driver's safety. Completely sealing all firewall openings is strongly encouraged, but no gap may be larger than 1/8 inch, except around dynamic devices extending through the firewall (e.g. throttle linkage, transmission linkage or other mechanical devices), they should be sealed to the extent that functioning of the device is not impaired." (ref. 08-163).

  - Change 17.2.P.2 to read:

"It is a non-production rear spoiler which is mounted to the rear portion of the rear hatch, deck, or trunk lid. The spoiler may extend no more that 10 inches from the original bodywork in any direction. Alternatively in a hatchback, the spoiler may be mounted to the rear hatch lid at or near the top of the hatch in such a configuration the spoiler may extend not more than *7.5* inches form the original bodywork in any direction. The spoiler may be no wider that the bodywork ***<****Phrase deleted****>.*** The use of endplates is prohibited. Spoiler endplates are defined as any vertical (or semi-vertical) surfaces attached in front of the spoiler which have the result of capturing and redistributing air (downforce) along all or any portion of the spoiler. The angle of attack is free. The spoiler may not function as a wing."

- Change 17.2.S to read:

  "The hood, hatchback, deck lid and fenders may be lightened or replaced by ones of alternate material, provided the shape is similar to the original and does not confuse the identity of the vehicle. Factory bolt-on fenders can be replaced in their entirety. Cars with non-removable fenders can replace the front fender panels going forward from the foremost door opening and the rear fender panels going rearward from the rearmost door opening. Closed cars must not remove stock material above the horizontal line placed at the lowest point of the driver's door window opening. The approval of alternate body panels does not authorize the use of belly pans forward of the firewall, or aft of the front edge of the rear wheel opening. Ground effect tunnels and/or attempts to gain ground effects are also not authorized. Any such elements incorporated in the otherwise approved components must be removes or disabled." (ref 08-259)

- The following rule change proposal is recommended by the PAC and is being published for member feedback:

  - In Appendix A, Prepared Class C, change the third through sixth paragraphs to read:

    "U.S. produced 4-cyl, 6-cyl and 8-cyl engines are allowed alternate-stroke crankshafts; crank angles must remain stock.

    U.S. produced 4-cyl, 6-cyl and 8-cyl engines manufactured by a particular corporation may be interchanged with ones of similar configuration from the same corporation (e.g., a Chevrolet engine would be allowed in a Pontiac or a Ford 351W would be allowed in a Fox chassis Mustang). Corporate engine substitutions include induction systems and thus no weight penalty is incurred for using the OE induction from the substituted engine.

    Similar configuration is defined as having the same number and arrangement (i.e. Dual Overhead). Displacement changes are allowed. Alternate engines for a particular model must locate the bell housing to the block mounting surface in the same plane as the standard part.

    Alternate iron or aluminum cylinder heads may be use on U.S. produced 4-cyl, 6-cyl and 8-cyl engines. Any alternate cylinder head(s) used shall be of a conventional design (siamesed intake ports, two valves per cylinder, all valves inline) direct replacement type." (ref. 08-280)

- The PAC has recommended, based on member input, withdrawal of the previously-published proposal to weigh with driver (ref. 07-147).

- The PAC has recommended that the previously-published proposals regarding transmissions (17.10.Q), clutch and gas pedals (17.10.D and 17.K.4), and drivers' seats (17.2.I) be referred to the BOD for approval. (ref. 07-400)

STREET MODIFIED

- The SMAC has recommended, and the SEB has approved, the withdrawal of the previously-published change proposal regarding a new Section 16.1.I, non-metallic inner fenders. (ref. 07-423)

- The SEB has asked the SMAC to investigate possibilities for a new SM class focusing on FWD cars.

- The following previously-published rule change proposal has been reviewed along with relevant member feedback, and is being recommended to the BOD:

  - Replace the content of 16.1.I with

    "Front hoods, engine covers, trunk lids and hatches not containing glass, front fenders, rear fenders not part of chassis structure (unibody), front & rear fascias, and side skirts may be modified or replaced, and may be attached with removable fasteners. Associated hardware including latches, hinges, and window washer nozzles may be modified, removed, or replaced. This does not permit removal of the remainder of the window washer system. Fenders may be flared as per Street Prepared. Non-metallic fender liners may be modified, replaced, or removed." *Comment:* This proposal is intended to allow less expensive and more readily available ways for cars to achieve their calculated minimum weight. (ref. 08-093, 08-151, 08-162, 08-169, 08-171, 08-187, 08-204, 08-263)

- The previously-published SM and SM2 weight revision proposals have been amended per member feedback, and are being republished for review:

  Under SM:

  "AWD: 1800 lbs + 275 lbs/liter" changes to "AWD: 1800 lbs + 300 lbs/liter"

  Under SM2:

  "AWD: 1600 lbs + 275 lbs/liter" changes to "AWD: 1600 lbs + 300 lbs/liter"

MODIFIED

- The MAC has provided a proposal, being published here for member feedback, to replace 18.1.E as follows:

"E. Aerodynamic Aids

1. These classes are restricted downforce classes. No aerodynamic tunnels, wings, or sealing skirts may be added. No bargeboards, ramps, vanes, wickerbills, or other aerodynamic devices are allowed except as specified.

2. The hood, tub, roof, rear fenders, and rear deck are not permitted to be reshaped to achieve downforce. The front of the car may be reshaped to accommodate the construction of spoilers, air dams, and splitters, and may be widened to rear body width as specified in E.4.c below. Ramps joining the front fender flares to the splitter/spoiler/airdam assembly which are included as part of a SCCA-approved GT-1 front bodywork package are allowed.

3. Front Aero

   a) The standard O.E. or a non-standard front spoiler or air dam may be used. A non-standard front spoiler is not permitted to protrude forward beyond the overall outline of the car as viewed from above, or aft of the forward-most part of the front fender opening, and shall not be mounted more than four inches above the horizontal centerline of the front wheel hubs.

   b) The spoiler may cover the normal grille opening at the front of the car. Cooling duct openings are permitted. If the front radiator is removed or relocated, no aerodynamic use of the unobstructed front radiator pathway may be made. The front spoiler may be attached to the original bodywork, or it may replace the bodywork it would otherwise cover.

   c) The front spoiler may be no wider than the rear bodywork, measured as in E.4.c. below. The front spoiler may not function as a wing, and therefore must be installed such that air does not pass both over and underneath it. This may be accomplished by ensuring that the upper edge of the spoiler is in complete continuity with the bodywork above the spoiler. New bodywork may be added to close the gaps between the fenders, nose, and spoiler/splitter/airdam assembly on cars with open or irregular front bodywork such as the Model T Ford, MG-TD, Morgan, and Lotus Seven. When these or similar vehicles use a full-width front spoiler, the car's spoiler/airdam is required to be vertical (between 80-100 degrees) for the lower 8" of its extent. The change in top view outline caused by these bodywork changes is allowed.

   d) Front splitters are allowed but must be installed parallel to the ground (within +/- 3/16 inches fore to aft). For safety considerations, splitter edges shall be rounded for safety and be a minimum of 1/4" thick. Splitters may not be wider than, nor extend more than 6 inches forward of the top-view outline of the car.

4. Rear spoilers

   a) If a rear spoiler is used, it shall be mounted to the rear hatch, deck, or trunk lid, and mount no further forward than the base of the rear window. The spoiler extension for the whole spoiler is set by one measurement at the lateral midpoint of the car. At that point; the spoiler may not extend more than 10 inches from the attachment point out to the outer or free edge. This sets the maximum height above ground at all other locations on the spoiler. The result may be a flat topped rather than contoured spoiler. Alternatively, the spoiler may be mounted at the rear of the roof, or to the rear hatch lid at or near the top of the hatch; in such a configuration the spoiler may extend no more than 4 inches from the original bodywork, measured as described above.

   b) The spoiler may be no wider than the rear bodywork, measured as the maximum distance between the outside edges of the wheel well openings or fender flares at axle height.

   c) Aerodynamic aids permitted in subsection E shall not function as wings. Therefore, the spoiler may not overhang the bodywork such that air passes both over and underneath it. If the rear spoiler overhangs the side of the car, the lower edge of the spoiler shall be supported by bodywork that will prevent air from passing underneath the spoiler. This may be accomplished by extending the spoiler to join the bodywork or wheel opening/fender flare beneath the overhang.

5. Diffusers are allowed at the rear of the car only and shall have no more than 25 inches front to back of expanding chamber. Vanes or strakes are allowed inside the diffuser. A diffuser is defined as an expanding chamber between the vehicle and the ground for the purpose of accelerating air ahead of it to develop low pressure. The diffuser may protrude rearward beyond the top view outline of the car. Closed undersides or belly pans (lower surface) are permitted. The entire length of the underbody may be closed off to permit proper airflow to a rear diffuser or to smooth the underside of the car. The belly pan shall be flat within 1 inch total deviation. No tunnels or other underbody aerodynamic features are permitted. Chassis rake is free. Additionally, no side skirt or body side, etc., may extend more then 1cm below this lower surface anywhere on the car to the rear of the front axle unless specifically permitted by these rules. Diffuser sideplates and strakes may extend below the diffuser surface as long they do not attain a definite seal with the ground on level ground.

6. If the factory production car was supplied with tunnels or wings, they may remain, but they must be blocked in a safe manner to prevent them from functioning to provide downforce. For example, foam or sheet metal may be firmly attached in tunnels or on wings to ruin their shape or to stop airflow.

7. The use of front and rear spoiler endplates is allowed. Allowed area for each endplate is 100 sq in for rear trunk spoiler, 16 sq in for roof spoiler, and 36 sq in for front spoiler/splitter assembly. The spoiler angle of attack is free."

F125 / FORMULA JUNIOR

- The KAC has provided the following additions to their previously-published proposals to add the Rotax Minimax and Micromax to FJA and FJB (respectively): The Minimax weight would be 275 lbs. The Micromax weight would be 245 lbs.
- The KAC is working on rule changes which would reduce or eliminate references within the rules to other sanctioning bodies.
- The KAC is looking at possible weight reductions for clutch karts.

NOT RECOMMENDED

- Stock, classing of Nissan 240SX (ref. 08-255)
- ST, seat belt receiver update/backdate (ref. 08-233)
- SP, rear seat removal (ref. 08-275)
- SP, C-clip eliminators (ref. 08-270)
- Prepared, bellypans (ref. 08-235)
- Prepared, SAAB 96 2-stroke in GP (ref. 08-232)

REFERRED TO COMMITTEE FOR FOLLOWUP

- SAC – Older cars in Stock classes
- STAC and SMAC – Class renaming for better consistency

TECH BULLETINS

1. Stock: The Stock category list of ineligible models, known as the exclusion list, will be relocated from the fourth paragraph of Appendix A – Automobile Classes into a separate list under the Stock Category heading. NOTE: This will not change its effect, but will make the list easier to find.
2. Stock: Add to 13.1 after the first sentence: "The addition of small holes for attachment hardware for authorized modifications is implicit (e.g. holes for fasteners to mount additional gauges, holes for brackets to mount shock absorber remote reservoirs, etc.). However, these holes may serve no other purpose."
3. Stock: The clarification under "SHOCK BUSHINGS" on page 247 of the 2008 Solo Rules is to be incorporated into Section 13.5.B, such that a new second paragraph of that section will read: "For cars with a bayonet/shaft-type upper shock mount, this allowance permits the removal of the shock bushing from the upper mounting plate (e.g. via drilling, cutting, burning out the bushing) and replacing it with another bushing. This also includes shock bushings located in control arms, etc. This does not allow other modifications to the plate itself or use of an alternate plate." In conjunction with this, the second paragraph of 13.5.C is deleted. *Comment*: This revised wording eliminates ambiguity in the rules as they currently stand, when clarifications in Appendix F are taken into account. The intent is not to further expand stock class shock allowances.
4. Stock, errors and omissions: The GS Volvo listing "Turbo models (all)" is corrected to read "Turbo models NOC".
5. Stock, errors and omissions: The GS "Volvo NOC" listing should be removed, since it conflicts with the correct "NOC" listing in H Stock.
6. Stock: The BMW M sedan is covered by the previously-published listing for the M coupe. (ref. 08-272)
7. Stock: The following new listings, effective immediately upon publication, have been recommended by the SAC and approved by the SEB:

Audi S5 ('08+)	AS
Audi A5 ('08+)	DS
Pontiac G8 V6	GS
Pontiac G8 V8 & NOC	FS
Nissan Versa	HS
Scion xB ('08+)	HS

8. Stock: The DS listing for the Chevrolet Cobalt SS should read "Cobalt SS (turbo, supercharged)" (ref. 08-271)
9. Stock: The list of cars considered unsafe due to stability and CG issues, currently shown in the third paragraph of Section 3.1, is to be moved to Appendix A in a separate list at the beginning of the Stock category.
10. Street Touring and Street Prepared: All three pieces of a Miata motor mount (Engine Mount Rubber, Stopper Casing and Engine Bracket) are considered to be part of the "Engine Mount" in 14.10.J and 15.10.J.
11. Street Touring: The Kumho XS is not eligible for use at Divisionals, National Tours, and Nationals in 2008 per Section 13.3.
12. Street Prepared: The allowances of 15.10.W do not include "C-clip eliminators." (ref. 08-270)

13. Prepared: Change 17.6.C to read as follows *(changes in italics*): "Addition, replacement, or modification of Anti-lock Braking Systems is prohibited. The standard system may be removed in its entirety or disabled electrically in a manner not readily accessible while driving, but not altered in any other way. *Sensors, control & proportioning valves, computers, and master cylinders are considered part of the ABS system and should be not altered nor relocated. Pedals, calipers, rotors, and brake lines can be replaced or modified."* (ref. 08-237)

14. Prepared: Change 17.2.T to read: "All headlights, front parking lights, and front signal lights may be removed. *Headlight doors may be removed, replaced or modified. Any remaining* openings shall be covered with a wire mesh screen or panel of fiberglass, plexiglass, metal, or other nonflammable material. Ducts from headlights, *headlight doors,* front parking lights, and front signal lights ~~in the front of the car~~ may be used for ducting air to the engine, front brakes, and/or oil cooler(s). Any opening used for ducting may not be relocated. These ducts may pass through interior panels for this purpose. The cross section area of a single duct shall not exceed the cross sectional area of the original (single) headlight."

15. Prepared: Per the PAC, 17.8.B.4 is clarified to read as follows: "The manufacturer's original basic type of rear suspension (e.g. independent, live axle, MacPherson strut, A-arm, etc.) shall be retained, unless otherwise stated in Appendix A. Rocker arms and push-pull rods may be used to augment the rear suspension members." (ref. 08-052)

QUICK LINKS

The following items have been removed from regular inclusion in FasTrack News and can be found on SCCA's Web site at the following links:

CLUB RACING

Accredited Driver Licensing Schools: http://www.scca.com/contentpage.aspx?content=39

Forms: http://www.scca.com/contentpage.aspx?content=45

Technical Forms: http://www.scca.com/contentpage.aspx?content=74

Scrutineer's Forms: http://www.scca.com/contentpage.aspx?content=77

Vehicle Homologation Forms: http://www.scca.com/contentpage.aspx?content=79

General Competition Rules (GCR): http://www.scca.com/contentpage.aspx?content=44

2008 Runoffs Home Page: http://www.scca.com/Runoffs

SOLO

Forms: http://www.scca.com/contentpage.aspx?content=60

Rulebook: http://www.scca.com/contentpage.aspx?content=61

2008 Tire Rack SCCA Solo National Championships: http://www.scca.com/event.aspx?hub=6&event=12143

RALLY

Forms: http://www.scca.com/contentpage.aspx?content=49

Rulebook: http://www.scca.com/contentpage.aspx?content=50

SCCA NATIONAL CONVENTION

Event page: http://www.scca.com/event.aspx?hub=6&event=11083

EVENT CALENDAR: http://www.scca.com/events.aspx?hub=10

Fastrack news official SCCA member notification

EFFECTIVE FIRST DAY OF THE COVER MONTH UNLESS OTHERWISE NOTED August 2008

CONTENTS

BOARD OF DIRECTORS	**1**
Board of Directors Minutes	1
CLUB RACING	**4**
CRB Minutes	4
Technical Bulletin	7
COURT OF APPEALS	**8**
SOLO	**9**
SEB Minutes	9
RALLY	**20**
RoadRally Board Minutes	20
QUICK LINKS	**22**

BOARD OF DIRECTORS MINUTES

BOARD OF DIRECTORS' MINUTES | SPORTS CAR CLUB OF AMERICA, INC. | *June 21, 2008*

The Board of Directors, Sports Car Club of America, Inc. met via e-mail June 21, 2008. The following members participated: , R. J. Gordy, Chairman, Howard Allen, Jim Christian, Philip Creighton, Larry Dent, Bob Introne, Bob Lybarger, Lisa Noble, Andy Porterfield, John Sheridan, Mike Sauce, K.P. Jones and Jerry Wannarka.

MOTION: That effective immediately, the Board of Directors grant a waiver of GCR 3.9.1.F.4 requirements for adding an additional Division prior to the conduct of the third National Championship event in the relevant division for Scott Tucker. (Creighton/Dent) PASSED Abstaining, Christian, Jones

MOTION: That effective immediately, the Board of Directors grant a waiver of GCR 3.9.1.F.4 requirements for adding an additional Division prior to the conduct of the third National Championship event in the relevant division for David Mead. (Noble/Dent) PASSED Abstaining, Christian, Jones

MOTION: To adjourn.

Respectfully submitted,

Jim Christian
Secretary

BOARD OF DIRECTORS MINUTES

BOARD OF DIRECTORS' MINUTES | SPORTS CAR CLUB OF AMERICA, INC. | *June 30, 2008*

The Board of Directors, Sports Car Club of America, Inc. met via teleconference June 30, 2008. The following members participated: R. J. Gordy, Chairman, Howard Allen, Jim Christian, Philip Creighton, Larry Dent, Bob Introne, Bob Lybarger, Lisa Noble, Andy Porterfield, John Sheridan, Mike Sauce, K.P. Jones and Jerry Wannarka. Jim Julow, President, Jeff Dahnert, Vice President of Finance, also participated.

MOTION: To approve the minutes of the June 2, 2008 and June 21, 2008 meetings. (Sheridan/Dent) PASSED, Unanimous

PRESIDENTS REPORT

Jim reviewed progress on the contract for the Runoffs at Road America. He presented a proposal for incentives to be awarded to competitors with participation in multiple consecutive Runoffs.

TREASURERS REPORT

Jeff Dahnert reported that through April 2008, we were slightly behind budget.

OLD BUSINESS

None

NEW BUSINESS

To direct the president of SCCA, Inc., to execute that contract between SCCA Inc., SCCA Pro Racing, and W. C. Vision, licensing control of World Challenge to WC Vision, as more fully set out in the proposed contract between the parties. (Jones/ Dent) PASSED,

MOTION: To adjourn. (Porterfield/ Allen)

Respectfully submitted,

Jim Christian
Secretary

BOARD OF DIRECTORS MINUTES

BOARD OF DIRECTORS' MINUTES | SPORTS CAR CLUB OF AMERICA, INC. | *July 7, 2008*

The Board of Directors, Sports Car Club of America, Inc. met via teleconference July 7, 2008. The following members participated: , R. J. Gordy, Chairman, Howard Allen, Jim Christian, Philip Creighton, Larry Dent, Bob Introne, Bob Lybarger, Lisa Noble, Andy Porterfield, John Sheridan, Mike Sauce, K.P. Jones and Jerry Wannarka. Jim Julow, President, Jeff Dahnert, Vice President of Finance, also participated.

MOTION: To approve the minutes of the June 2, 2008, June 21, 2008 and June 30, 2008 meetings. (Allen/Lybarger) PASSED, Voting NO, Jones, Abstaining, Sheridan, Sauce, Porterfield

PRESIDENTS REPORT

The Miata tire test has been completed; a report will be submitted to the Board of Directors at the August conference call. Jim reported on ACCUS activities. He reported on worker signups for the Runoffs, additional F&C staff is needed. SCCA Pro and WCVision contract has been signed. Runoffs entry signup starts tomorrow.

TREASURERS REPORT

Jeff Dahnert reported that through May 2008, we were slightly behind budget.

LIAISON REPORTS

SOLO EVENTS BOARD – Introne

The SEB discussed rule changes and additions for presentation to the BOD in September. Also, safety at SOLO events was discussed in light of a recent incident. Future sites for the National Championships were briefly reviewed.

SCCA FOUNDATION – Dent

Current statistics for Street Survival events run so far this year are not available at present, but the good news is that the Foundation presently has $45,220.94 in it's treasury. This represents an amazing comeback from the re-organization of the Foundation several years ago when the treasury was well in the red.

CLUB RACING BOARD – Wannarka, Christian

The activities of the CRB have been devoted primarily to addressing member requested adjustments to car configurations. While there are still more items requested than anyone would like to see, the number is going down. The latter is probably a result of the racing season being well underway. Noteworthy general items discussed were:

- In spite of Formula Ford being an accepted class for many years, recent reading of the rules have identified body configuration ambiguities that have resulted in questions of aerodynamic advantages. Seasoned competitors are saying 'we've always accepted it as such' and newer entrants are seeing competition advantages. The Advisory Committee has agreed on the concepts for rule revision and is working on getting agreement to the verbiage to be used. They anticipate the CRB will have the updated rules for review at their next meeting.
- Question has been raised by one of our Regions wanting relief from the 103db maximum specified in the GCR. The subject enjoyed a lot of discussion. The CRB presumes that there was good reason to select the 103 db level initially. Also, the 103 level continues to be a level that is acceptable to most track environments and allows minimal impact on most race cars. The original intent of having a standard level was to meet local requirements and minimize drivers having to make track to track exhaust changes. While some tracks may not require this level of sound control, there is also the question of sound impact to other drivers and course workers. The CRB believes that it has the responsibility to protect, as best as possible, those members that are also in the proximity to loud cars. Since this is a GCR listed item, the CRB believes that such a change would be outside that allowable by the Supplemental Regulations and CRB powers.
- The CRB is concerned about the large number of member requested changes occurring during the year and is working on developing policies that would minimize changes in the future. At the moment these efforts are targeted toward the Showroom Stock and Touring groups. The formula under evaluation for classifying cars into these categories continues to look promising. Also being explored is the concept that for Showroom Stock, any suspension packages that is approved like Trunk Kits must be utilized as the entire approved package. For Touring, competitors could use either the entire package or pick and choose which components of the

approved suspension package they would like. These concepts when mature will be presented to the Board of Directors in time for the next competition year.

ROADRALLY BOARD –Allen

Due to extra editing that the 2009 rules set will not be approved until the Board of Directors October meeting.

COURT OF APPEALS – Allen

The COA work load has not picked-up with the race season and the court is now completing case number eight. This is down almost 50 percent from a year ago. One reason for this may be better stewarding in the field. There are two cases in the pipeline one rumored as being another rules interpretation.

OLD BUSINESS

NONE

NEW BUSINESS

MOTION: To approve the following changes to the SCCA Strategic Plan:
Item 2 change the word Membership to Promote. The new heading to read "Promote Growth and Activation." No change to bullets 1,2 and 3. Add new bullet to read "Emphasis on growing participation in all competition programs."
The revised item to read as follows:

2. ~~Membership~~ *Promote* Growth and Activation
- Aggressive enthusiast recruitment Campaigns
- Improved new member communications
- Enhanced focus on renewal
- *Emphasis on growing participation in all competition programs.*

(Christian/Sheridan) PASSED, UNANIMOUS

MOTION: To waive the provisions of GCR section 3.9.3.A to allow Jon Brandstad to compete in the 2008 Runoffs. (Gordy/Christian) FAILED, Abstaining, Sauce. Not Voting, Jones

MOTION: To waive the provisions of Operations Manual Section 5.8 to allow Southern Pacific Division to conduct a 2009 National in December of 2008. (Porterfield/Christian) PASSED Voting NO, Creighton Abstaining, Lybarger, Noble, Sauce

MOTION: To adjourn. (Porterfield/ Allen)

Respectfully submitted,

Jim Christian
Secretary

CLUB RACING BOARD MINUTES

CLUB RACING BOARD |SPORTS CAR CLUB OF AMERICA, INC. | *June 3, 2008*

The Club Racing Board met by teleconference on June 3, 2008. Participating were Bob Dowie, Chairman; Chris Albin, Stan Clayton, Dave Gomberg, Peter Keane, and Russ McHugh. Also participating were Jim Christian and Jerry Wannarka, BoD Liaisons; John Bauer, Technical Assistant Club Racing; and Lauri Burkons, CRB Secretary.

In addition to those items covered in Technical Bulletin 08-07, the following decisions were made:

SUBMITTED TO BoD FOR APPROVAL

The following subjects will be referred to the Board of Directors for approval. Address all comments, both for and against, to the Club Racing Board. Comments may be e-mailed to crb@scca.com.

GCR

Item 1. Effective 11/1/08: Change section 8.3.3.A.5 as follows:

In the event of a protest involving verification of *components and/or assemblies* ~~camshaft specifications~~, SCCA Club Racing Technical Services offers verification services for protest and/or compliance resolution according to the following requirements:

a. A complete description of the vehicle/engine combination should be included (~~i.e.~~ *e.g.,* make, model, year, VIN #, engine code, displacement, etc.).

b. A known stock example of the *part* ~~camshaft~~ in question must be included with the protested *part* ~~camshaft~~. The sample *part* ~~cam~~ must be of the same make, model and year of the protested *part* ~~camshaft~~.

~~c. An accurate description of the intake and exhaust valve arrangement relative to the #1 cylinder is required (i.e., EX / IN, EX / IN, EX / IN, EX / IN).~~

~~d. The engine firing order and crankshaft rotation direction is required. NOTE: For camshaft testing purposes, crank shaft rotation is determined by looking at the front of the engine, NOT from the driver's seat.~~

c ~~e~~. The cost for *the inspection will be set according to the Club Racing Labor Rate Guide, published on the SCCA website.* ~~each camshaft test is $100.~~ Provisions for shipping to and from the national office should be included in the bond.

d ~~f~~. Upon receipt of the above information and samples, a complete ~~camshaft~~ comparison will be produced within 5 working days. This information will be conveyed to the Chairman SOM directly via ~~fax or~~ email.

Item 2. Effective 11/1/08: Change the lower illustration following section 9.3.18.H as follows:

~~4~~ 6" *max* at guide or anchorage - when using a head and neck restraint, follow the manufacturer's recommendation.

Formula

Item 1. Effective 11/1/08: Remove the 25 lb weight penalty note for fuel injection in FA section 9.1.1.A.2.b, as follows:

~~NOTE: Add 25 lbs. or fuel injection (except Volkswagen).~~

Item 2. Effective 11/1/08: Remove section 9.1.9.C.5.e in its entirety:

~~e. It will be required that all cars display the following:~~

~~1. The SCCA field logo on the front and both sides of the car.~~

~~2. Four (4) inch high "SRF" class designation on both sides.~~

~~3. Official tire manufacturer's decals per C.23.f.~~

~~4. Official brake pad manufacturer's decal on both sides of the car if required by SCCA Enterprises.~~

Item 3. Effective 11/1/08: Remove section 9.1.9.C.23.f in its entirety:

~~f. All cars shall display three (3) official Goodyear tire decals in the following locations: One (1) decal on the nose forward of the radiator outlets. One (1) large decal on each side of the vehicle on the vertical portion of the bodywork. All other tire decals shall be removed. All cars shall display three (3) official Ford decals in the following locations: One (1) large decal on each side of engine cover. One (1) small decal on nose section visible from directly in front of vehicle.~~

Sports Racer

Item 1. Effective 11/1/08: Remove the 25 lb weight penalty for fuel injection in CSR section 9.1.9.A.2.a.4, as follows:

~~4. Cars using engines with fuel injection shall weigh 25 lbs. more than the same engine using carburetion.~~

RECOMMENDATIONS TO THE BoD

None

MEMBER ADVISORIES

The CRB and AS advisory committee wish to remind the American Sedan community that those competitors in former T2 cars must use fuel that meets the requirements of the GCR for the Touring category.

NEW CAR CLASSIFICATIONS

None

REFERRED or TABLED

GCR

Require all appeals be received 28 days before the beginning Runoffs date (Entriken). Tabled for CoA input.

Formula

FM – Explore the 6-port motor (Drummond). Tabled for further research.

NOT RECOMMENDED

GCR

1. Eliminate sound requirements from the GCR (Stavely). Consistent requirements are necessary for sound control across the country.
2. Use the American flag to start races (various phone queries to staff). The flag should not be used as requested because it may be considered disrespectful of the symbol. The US Flag Code states, "The flag represents a living country and is itself considered a living thing."

Formula

1. F500 – Increase the wheelbase to 85 inches (Schmidt). This would obsolete all existing chassis.
2. CSR – Allow the MSR Formula Mazda Conversion to run at 1,440 lbs and 48 mm (Schumacher). The CRB no longer makes CSR specific chassis/engine combination classifications.

Grand Touring

1. GT3 – Encourage the less competitive cars to compete (McKinney/Jackson). The class is competitive as specified.
2. GT3 – Allow 2.4 L engines a 32 mm SIR at 2,180 lbs (Burke). Next year, all GT3 cars will be on 31 mm SIRs.
3. GT3 – Use an FIA type formula to equate engine performance potential (Burke). The current formulas are adequate for equitable performance potential.
4. GTL – Allow non-transparent windshields (Linn). The rules are adequate as written.

Spec Miata

Allow factory hardtop latches (Buhl). The rules are adequate as written.

Previously Addressed

Addressed in Technical Bulletin 08-07 or the July 2008 FasTrack:

FV – Clarify the requirement for crush boxes (Morris).

No Action Required

GCR

1. Class consolidation input (14 letters). Thank you for your input.
2. Support for FIA 1986 suits (Ebersole). Thank you for your input.
3. Combining sessions input (3 letters). Thank you for your input.
4. Can a flashing rain light be used (Ellingson)? Yes.

5. Can I turn on the rain light at my discretion (Ellingson)? Yes.
6. Update the roll cage inspection hole language (Funderburg). Thank you for your input.
7. Address the sound control conflict between the GCR and Oregon state law (Butler). GCR 5.7.3 states, "The primary standard for SCCA Sound Control shall be a sound pressure level of 103db "A" frequency weighted (dba) measured on the fast response setting at 50 feet (+/- 2 feet) from the edge of the track pavement, <u>and/or artificial markers indicating track edge</u>." The underlined phrase allows the Oregon Region to mark the pavement as proposed, measure 50 feet from those markings, and be in compliance with the GCR requirements. That will also satisfy the Oregon law.
8. Allow open hood visual inspections to competitors (Knestis). The Chief Steward may order impound and provide an opportunity for open hoods.
9. Support for 9.3.19.A Fire Suits (Zaslow). Thank you for your input.
10. Opposition to 9.3.19.A Fire Suits (Rhea). Thank you for your input.
11. Support for FIA 1986 suits (Blethen). Thank you for your input.

Formula/Sports Racer

1. F/SR – Class consolidation input (35 letters). Thank you for your input.
2. F500 – Allow unleaded fuel (Wassersleben). This will be considered with the revised fuel rules.

Grand Touring

1. GTL – Clarify exhaust routing (Arbogast). The rule is adequate as written.
2. GTL – Opposition to weight increase to Spridget Roadsters (Blust). Thank you for your input.

American Sedan

1. Engine input (Payne). Thank you for your input.
2. Alternate cylinder head input (20 letters). Thank you for your input.

Spec Miata

1. Spec tire input (3 letters). Thank you for your input.
2. Opposition to compliance fee (Mathias). Thank you for your input,

<u>Resumes</u>

None

CLUB RACING TECHNICAL BULLETIN

DATE: July 1, 2008
NUMBER: TB 08-07
FROM: Club Racing Board
TO: Competitors, Stewards, and Scrutineers
SUBJECT: Errors, and Omissions, Competition Adjustments, Clarifications, and Classifications.

All changes are effective 8/1/08 unless otherwise noted.

Grand Touring

GT1

1. Change 9.1.2.D.10.b.2 p.262 to read: No part of the fuel cell shall be closer to the ground than six (6) inches, unless contained within *and above the lowest part of* the basic structural frame rails of the vehicle~~ and located forward of the rear axle~~ *and fully enclosed*.

GT3

1. Classify the F20C engine.
   Add new spec line to GTCS, Engines – Acura, p. 296, Engine Family: F20C, Engine Type: DOHC, Bore x Stroke(mm): 87.0 x 84.0, Displ.(cc): 1997, Head Type: Alum, Crossflow, Valves / Cyl.: 4, Fuel Induction: 31mm SIR, Weight(lbs): 2000.
2. Classify the F20C engine.
   Add new spec line to GTCS, Engines – Honda, p. 301, Engine Family: F20C, Engine Type: DOHC, Bore x Stroke(mm): 87.0 x 84.0, Displ.(cc): 1997, Head Type: Alum, Crossflow, Valves / Cyl.: 4, Fuel Induction: 31mm SIR, Weight(lbs): 2000.
3. Engines – MAZDA, p. 302, add to the 2189cc engine specs as follows: Valves/Cyl.: 2

AS

1. Camaro & Firebird (82-92), p. 482, Effective 11/01/08, add to the specs as follows: Notes: Edelbrock Cylinder Head Part #'s 608979, 608879
2. Camaro & Firebird (93-02), p. 482, Effective 11/01/08, add to the specs as follows: Notes: Edelbrock Cylinder Head Part #'s 608979, 608879
3. Mustang Incl. Cobra & Cobra R (79-93), p. 482, Effective 11/01/08, add to the specs as follows: Notes: Edelbrock Cylinder Head Part #'s 602579, 602479
4. Mustang Incl. Cobra thru 95 (94-98), p. 482, Effective 11/01/08, add to the specs as follows: Notes: Edelbrock Cylinder Head Part #'s 602579, 602479
5. Mustang Incl. Cobra (99-04), p. 482, Effective 11/01/08, add to the specs as follows: Notes: Edelbrock Cylinder Head Part #'s 602579, 602479
6. Mustang GT (2005), p. 482, Effective 11/01/08, add to the specs as follows: Notes: Edelbrock Cylinder Head Part #'s 602579, 602479
7. Capri (79-86), p. 482, Effective 11/01/08, add to the specs as follows: Notes: Edelbrock Cylinder Head Part #'s 602579, 602479
8. GTO (04-06), p. 482, Effective 11/01/08, add to the specs as follows: Notes: Edelbrock Cylinder Head Part #'s 608979, 608879
9. As approved by the BoD in the January FasTrack; change section 9.1.6.F, p. 476-481, to read as follows: Exhaust Valve Size: ~~1.54"~~ *1.55"*

SM

1. Mazda MX-5 / Miata (94-95), p. 509, change the specs to read as follows: Weight(lbs): 2375
2. Mazda MX-5 / Miata (96-97), p. 509, change the specs to read as follows: Weight(lbs): 2375

Touring

T2

1. Subaru Impreza WRX STi (03-06), p. 582, correct the specs as follows: Notes: AMS front and rear springs ~~#AMS-SCCA01~~ *#AMS-SCCA-STiST1* allowed.

COURT OF APPEALS

JUDGMENT OF THE COURT OF APPEALS
Craig Martins vs. SOM, COA Ref. No. 08-08-GL
July 11, 2008

FACTS IN BRIEF
At the Race of Champions National Race at Mid-Ohio Sports Car Course on Sunday, June 1, 2008 Bill Baten, driver of T2 #98, protested Tommy Joe Martins, driver of T2 #51, for passing under double yellow flags displayed at turn 10, in violation of GCR 6.11.2.B.

The Stewards of the Meeting (SOM) John Pfetzing, Fred McAninch, and Jim Green, Chairman, reviewed the available Witness Statements along with information from Timing and Scoring, determined that Mr. Martins passed Mr. Baten under double yellow flags, and penalized him one lap, which moved Mr. Martins from 1st to 3rd in class. The penalty was accompanied by the automatic 3 license penalty points.

Mr. Martins' Entrant, Craig Martins, is appealing this decision.

DATES OF THE COURT
The Court of Appeals (COA) Dick Templeton, David Nokes, and Bob Horansky, Chairman, met on June 19, 26, and July 3 and 10, 2008 to hear, review, and render a decision on the appeal.

DOCUMENTS AND OTHER EVIDENCE RECEIVED AND REVIEWED

1. Letter of Appeal from Craig Martins, Entrant for T2 #51, including his Witness Statement, received June 12, 2008.
2. Official Observer's Report and related documents, received June 12, 2008.
3. Email from Chief Steward Doug Ruth, received June 20, 2008.
4. Lap Chart and full Timing and Scoring information received on June 23 and 27, respectively.
5. Additional email Statement from Bill Baten, driver of T2 #98, received June 25, 2008.
6. Race Log and car time cards, received June 30, 2008.
7. Email Statement from William Moore, driver of T2 #3, received June 30, 2008.

FINDINGS
Craig Martins' appeal is based on the following arguments:

- The SOM did not have access to complete information since Craig Martins had to leave the track before he could file a Witness Statement.
- The lap chart shows a change of position, but not the location of the change, or whether the change occurred before or after the full course yellow was displayed.
- There was nothing in the Race Log about a pass under yellow.

The SOM considered input from both affected T2 drivers, Tommy Joe Martins and Bill Baten, the spotter for Bill Baten, and the input from a T3 driver who observed the pass. No corner reports were available, and nothing appeared in the race log.

The Court of Appeals found that Craig Martins' Statement conflicts with the other Statements. It is true that the Lap Chart and other T&S materials verify only that there was a change of position during a full course yellow, but they do not assist in determining either the location or the timing of the pass relative to the display of the double yellow flags. The absence of a notation in the Race Log does not on its own indicate the absence of the pass.

The additional materials submitted as a part of the appeal did not provide sufficient new information or evidence to warrant modifying the original decision, and as a result, that decision is upheld in its entirety.

DECISION
The SCCA Court of Appeals denies Mr. Martins' appeal. The Court finds Mr. Martins' appeal is well founded and his appeal fee, less the amount retained by SCCA, will be returned.

SOLO EVENTS BOARD MINUTES

SOLO EVENTS BOARD |SPORTS CAR CLUB OF AMERICA, INC.| *June 25, 2008*

SOLO EVENTS BOARD

The Solo Events Board met by conference call June 25. Attending were SEB members Dave Whitworth, Tina Reeves, Steve Wynveen, Chris Dorsey, Jason Isley, Erik Strelnieks, Rick Myers, and Donnie Barnes; Lisa Noble and Bob Introne of the BOD; and Doug Gill of the National Staff. These minutes are presented in topical order rather than the order discussed.

Unless noted otherwise the effective date for all rule, class, and listing change proposals herein is 1/1/2009.

GENERAL

o The Central Division Solo Events Steward position remains open. Interested members are invited to submit their qualifications in writing to the SEB via the National Office.

o The SEB and Staff will be gathering and studying sound level data, and will be addressing the topic of possible changes to the provisions of Appendix I.

RECOMMENDATIONS TO THE BOD

o The SEB has approved and is recommending to the BOD the following change proposals:

o Appendix E (change to Solo Safety Steward licensing requirements):

ITEM 1) Replace the contents of Appendix E subsection V.E. with: "Effective 1/1/09, following an initial one-year licensing as a SSS, the SCCA Central Licensing Department shall issue a renewal application every three years, pending completion of the appropriate number of events and continuing education as a Solo Safety Steward. All requests for such renewals shall be made by submitting a renewal application with the appropriate number of events and the continuing education class date recorded in the application. During each three-year licensing period, the SSS must participate in one continuing education seminar and serve as a SSS at five events. The DSS shall be responsible for confirmation of participation in the continuing education process. The renewal date is the same as membership renewal."

o Appendix D (Solo Trials rule change package)

ITEM 2) Modify the Solo Trials rules as follows:

- Section II – Concept: Add a new 1st and 2nd sentence:

  "The Solo Trials Rules specified within this Appendix are an extension of the Solo Rules. They are exception or additions to those rules and as such, if a subject matter is not specific herein, the Solo Rules governing that matter shall also govern a Solo Trials event."

- Section III – Procedure for SCCA Sanction

  Eliminate "numbers"; change 1st sentence of current #1 to read:

  "Submit to the National Office an event site approval *and request for sanction* which includes…"

  Add:

  "All new sites are required to have an inspection to determine suitability for this program. Prior approved sites do not need any subsequent inspections as long as there have been no changes to the surface or other safety-related criteria has changed since the initial inspection. Sanction will be ranted after successful completion of course site inspection."

  Delete paragraph #2.

- Section VI – Event Officials

  Change 1st and 2nd sentences to read:

  "The Chief Steward and Safety Steward shall be appointed by the Solo Chairman of the host Region but may be subject to review by the DSS and/or the DSSS if there is a need. All other officials may be appointed by the host Region without review."

- Section X – Vehicle Safety Equipment Requirements

  Change X.b. to read:

  "All drivers in SCCA-sanctioned Solo Trials events in which a roll bar or roll cage is installed shall utilize either a five-, six-, or seven-point restraint harness meeting the following specifications. A 7-point restraint harness is recommended. Arm restraints are required on all open cars including open targa-tops, sunroofs, and T-tops. The restraint system installation is subject to approval by the Chief Technical and Safety Inspector.

A. A 5-point system for use in automobiles where the driver is seated in an upright position consists of:

- A 3-inch seat belt or an FIA or SFI 16.5 certified 2-inch seat belt.

- An approximately 3-inch shoulder harnesses or FIA or SFI 16.5 certified 2-inch shoulder harnesses only if the HANS Device is used by the driver. Should the driver at anytime not utilize the HANS Device, 3-inch shoulder harnesses are required.

- An approximately 2-inch anti-submarine strap.

A 5-point harness is considered a minimum restraint system. 6- or 7-point systems are highly recommended in all cars including automobiles where the driver is seated in an upright position.

B. A 6- or 7-point system recommended for use in all automobiles consists of:

- A 3-inch seat belt or an FIA or SFI certified 2-inch seat belt.

- An approximately 3-inch shoulder harness or FIA or SFI 16.5 certified 2-inch shoulder harness only if the HANS Device is used by the driver. Should the driver at anytime not utilize the HANS Device, 3-inch harnesses are required.

- 2 or 3 approximately 2-inch leg or anti-submarine straps.

C. The shoulder harnesses shall be the over-the-shoulder type. There shall be a single release common to the seat belt and shoulder harnesses. When mounting belts and harnesses, it is recommended that they be kept as short as reasonably possible to minimize stretch when loaded in an accident. The shoulder harness shall be mounted behind the driver and supported above a line drawn downward from the shoulder point at an angle of 20 degrees with the horizontal. The seat itself or anything added only to the seat shall not be considered a suitable guide. Guides must be a part of the roll bar/cage or part of the car structure. Only separate shoulder straps are permitted (Y-type shoulder sstraps are not allowed). H-type configuration is allowed.

D. The single anti-submarine strap of the 5-point system shall be attached to the floor structure and have a metal-to-metal connection with the single release common to the seat belt and shoulder harnesses.

E. The double lag straps of the 6- or 7-point system may be attached to the floor as above for the 5-point system or be attached to the seat belt so that the driver sits on them, passing up between his/her legs and attaching either to the single release common to the seat belt and shoulder harnesses or attaching to the shoulder harness straps. It is also permissible for the let straps to be secured at a point common to the seat belt attachment to the structure, passing under the driver and up between his/her legs to the seat belt release or shoulder harness straps. All straps shall be free to run through intermediate loops or clamps/buckles.

F. Each seat belt and shoulder strap of the harness (5-, 6-, or 7-point) shall have an individual mounting point (i.e., 2 for each seat belt and 2 for each shoulder strap minimum). 6- or 7-point system anti-submarine straps may share a mounting point with one or both seat belts. The minimum acceptable bolts used in the mounting of all belts and harnesses are SAE Grade 5. Where possible, seat belts, shoulder harnesses, and anti-submarine straps should be mounted to the roll structure or frame of the car. Where this is not possible, large diameter mounting washers or equivalent should be used to spread the load. Bolting through aluminum floor panels, etc., is not acceptable.

G. Unless specifically mentioned herein, compliance with all driver restraint systems that comply with SFI 16.1, SFI 16.5, or FIA 8853/98 is highly recommended.

H. Harness threading must be assembled in accordance with the manufacturer's instructions. Tech Inspectors are cautioned to inspect all belts and harnesses for wear, looking for abrasions, rips, tears, or other issues which would make a belt/harness of questionable value for its intended purpose. Vehicles with such issues will be prohibited from these events."

Change X.3.c. to read:

"A hand-held fire extinguisher adhering to the following standards is highly recommended.

1. Halon 1301 or 1211; 2-pound minimum capacity by weight.

2. Dry chemical; 2-pound minimum with a positive indicator showing charge. Chemical: 10BC UL rated – potassium bicarbonate (Purple K) recommended; 1A-10BC UL rated multipurpose – ammonium phosphate and barium sulfate or Monnex.

3. The fire extinguisher shall be securely mounted in the cockpit. All mounting brackets shall be metal and of the quick-release type."

Change X.4. to read:

"125cc shifter karts are permitted with the appropriate driver safety gear as specified in the Solo Rules. However, depending upon surface irregularities of the site, the DSSS may prohibit these karts. Junior karts are not permitted."

- Section 13 (Stock):

  ITEM 3) Add to 13.9 as follows: "Additional battery hold-down hardware may be added. It may serve no other purpose."

- Appendix A (Street Touring)

  ITEM 4) Add the BMW E46 M3 to class STU.

STOCK

o The SAC's proposal for 2010 stock class moves has not yet been completed. This proposal will appear in the September Fastrack. The membership is asked to please consider the stock class moves for 2009 (July Fastrack) as independent, and to provide their comments to the SEB as such.

o With regard to the previously-published proposal in the July Fastrack, the SAC withdraws the Mitsubishi Eclipse Turbo AWD / Eagle Talon Turbo AWD from the list of cars proposed to move from DS to GS. *Comment:* AWD cars do not fit with the current class philosophy of GS.

o The proposals submitted for member input to move current exclusion list cars to SS for 2009 (see the July Fastrack) will be further considered in light of this year's National Championship results. The intent is to place those cars into SS should results show that the class has become faster due to an existing SS car rising to class dominance. Introducing the new cars would help to maintain competitive balance.

o The SEB is now beginning its review of the SAC's recommendations for the reorganization of classes for 2010. The SEB anticipates publishing the initial form of the proposal in the September Fastrack. Since the proposal for reorganization will be receiving a great deal of member input, the SEB requests that members provide input on previously-published Stock Class proposals for the 2009 season at this time and independently of the 2010 proposals.

STREET TOURING

o The following set of changes to Section 14 and Appendix A Street Touring Classes are being published as clean-up items. Competitors are advised that these changes do not alter the allowances of the rules, but are intended to improve clarity and structure. Please note this cleanup is based on the existing 2008 rules set. Any separate changes proposed during the current rules season are not yet included here, but would be added later after BOD approval.

- Section 14 changes:

14. STREET TOURING CATEGORY

The Street Touring category of vehicle modifications is meant to fit between the current Stock and Street Prepared categories. This category provides a natural competition outlet for auto enthusiasts using affordable sports cars and sedans equipped with common suspension, engine, and appearance modifications which are fully legal and compatible with street use anywhere in the country.

(text deleted)

Vehicle eligibility lists are now in Appendix A.

Under the provisions of Section 1.1 of these rules, Regions are free to allow any other version of the ST concept which meets their local needs.

(text deleted)

See Sections 3.8 and 8.3 for documentation requirements.

14.1 Authorized Modifications

A. All Solo Rules Stock Category allowances, plus all allowances contained in 14.1 through 14.10.

B. (text deleted)

14.2. BodyWork

A. Pedal kits and other interior cosmetic accessories may be added. . *"Dress-up" items such as chrome dipsticks and non-standard filler caps are permitted, provided they serve no other purpose.*

B. The driver and front passenger seats may be replaced, with the following restrictions: The seating surface must be fully upholstered: The top of the seat, or an attached headrest, may not be below the center of the driver's head. The seat, including mounting hardware, must weigh at least 25 pounds and must be attached using the OE body mounting holes/studs. Additional mounting points may be added.

C. *Factory rub strips, emblems, and mud flaps may be removed.*

D. Alternate steering wheels are allowed except that steering wheels with an integral airbag may not be

changed.

E. Fenders may not be cut or flared but the inside lip may be rolled to gain additional tire clearance. Flares that are part of body kits may be attached to the stock fenders. Plastic and rubber wheel well splash shields may be modified for tire clearance and to accommodate a rolled inside fender lip. The intention is to permit fitting the maximum allowable tire size, and the modifications may serve no other purpose (e.g. air intake, brake ducts, etc.). No other changes to the stock fenders or wheel wells are permitted.

F. Addition of spoilers, splitters, body kits, rear wings and non-functional scoops/vents is allowed. The intent of this allowance is to accommodate commonly available appearance kits, and replicas thereof, which have no significant aerodynamic function at Solo speeds. Body kits are limited to bumper covers, valances, side skirts, and fender flares. Standard parts may not be removed except for the substitution of spoilers, rear wings, bumper covers and valances. Rear wings must attach only aft of the rear wheel centerline.

The allowances regarding wings and spoilers only allow swapping like for like if the original device was not an OE option as configured by the factory, i.e. a spoiler for a spoiler or a wing for a wing. If a vehicle is available without a wing or spoiler from the manufacturer then either can be installed.

Total surface area of all spoilers, splitters and rear wing may not exceed 5 square feet as seen from above (see 12.9). Substitution of rear spoilers or wings must retain any original third brake light functionality unless otherwise equipped. No underbody panels may be added or substituted. The drilling of holes for the purpose of mounting these pieces is permitted.

G. Strut bars are permitted with all types of suspension. Strut bars may be mounted only transversely across the car from upper right to upper left suspension mounting point and from lower right to lower left suspension mounting point. No other configuration is permitted. Additional holes may be drilled for mounting bolts. Only bolt-on attachment is permitted. Interior trim panels may be modified to allow installation of strut bars. Holes or slots may be no larger than necessary and may serve no other purpose. This does not permit any modifications to the frame or unibody beyond the allowed mounting holes.

14.3 Tires

Tires must meet the eligibility requirements of the Stock category (excluding 13.3.F), with the following additional restrictions:

A. Tires may have widths up to and including *the following:*

225 – *STS, STS2*

245 – STX, STU (AWD)

275 – STU (2WD).

B. Tires must have a minimum tread wear rating of 140.

C. Tire models must not appear on the following list, which may be altered at any time by the SEB upon notification of the membership.

Pirelli P Zero Corsa

14.4 Wheels

A. Any wheels *are allowed with widths* up to *the following:*

7.5” - *STS, STS2*

8” - STX

Unlimited - STU

14.5 Shock Absorbers

A. Shock absorber bump stops may be altered or removed.

B. Any shock absorbers may be used. Shock absorber mounting brackets which serve no other purpose may be altered, added, or replaced, provided that the attachment points on the body/frame/subframe/chassis/suspension member are not altered. This instal-lation may incorporate an alternate upper spring perch/seat and/or mounting block (bearing mount). The system of attachment may be changed. The number of shock absorbers shall be the same as Stock. No shock absorber may be capable of adjustment while the car is in motion, unless fitted as original equipment. MacPherson strut equipped cars may substitute struts, and/or may use any insert. This does not allow unautho-

rized changes in suspension geometry or changes in attachment points (e.g., affecting the position of the lower ball joint or spindle). It is intended to allow the strut length changes needed to accommodate permitted modifications which affect ride height and suspension travel.

14.6 Brakes

A. Cross drilled and/or slotted brake rotors are permitted, same size and type as standard.

B. Brake lines may be substituted with alternate DOT approved flexible brake lines.

C. Air ducts may be fitted to the brakes, provided that they extend in a forward direction only, and that no changes are made in the body/structure for their use. They may serve no other purpose.

D. Original equipment ABS braking systems may be electrically disabled, but may not be removed or altered in any other way.

E: *STX and STU: Brake rotors may be replaced with any rotor of equal or larger diameter made from a ferrous or aluminum alloy. Calipers are unrestricted, but must mount to the original attachment points. Drum brakes may be replaced with disk brakes of a diameter equal to or greater than the inside diameter of the standard drum part. Brake backing plates (dust shields) may be modified the minimum amount necessary to accommodate allowed alternate rotors and calipers.*

14.7 Anti-Sway Bars

Substitution, addition, or removal of any anti-roll bar(s) is permitted. Bushing material, method of attachment, and locating points are unrestricted. Components such as anti-roll bars and strut housings that serve dual purposes by also functioning as suspension locators may not be modified in ways that change the suspension geometry or steering geometry. Non-standard lateral members which connect between the brackets for the bar, *including allowed strut bars per 14.2.G, are permitted.*

14.8 Suspension

A. Ride height may only be altered by suspension adjustments, the use of spacing blocks, leaf spring shackles, torsion bar levers, or change or modification of springs or coil spring perches. This does not allow the use of spacers that alter suspension geometry, such as those between the hub carrier and lower suspension arm. Springs must be of the same type as the original (coil, leaf, torsion bar, etc.) and except as noted herein, must use the original spring attachment points. This permits multiple springs, as long as they use the original mount locations. Coil spring perches originally attached to struts or shock absorber bodies may be changed or altered, and their position may be adjustable. Spacers are allowed above or below the spring. Suspension bump stops may be altered or removed.

B. Suspension bushings may be replaced with bushings of any materials (except metal) as long as they fit in the original location. Offset bushings may be used. In a replacement bushing the amount of metal relative to the amount of non-metallic material may not be increased. This does not authorize a change in type of bushing (for example ball and socket replacing a cylindrical bushing), or use of a bushing with an angled hole whose direction differs from that of the original bushing. If the Stock bushing accommodated multi-axis motion via compliance of the component material(s), the replacement bushing may not be changed to accommodate such motion via a change in bushing type, for example to a spherical bearing or similar component involving internal moving parts. Pins or keys may be used to prevent the rotation of alternate bushings, but may serve no other purpose than that of retaining the bushing in the desired position.

C. The following allowances apply to strut-type suspensions. Adjustable camber plates may be installed at the top of the strut and the original upper mounting holes may be slotted. The drilling of holes in order to perform the installation is permitted. The center clearance hole may not be modified. Any type of bearing or bushing may be used in the adjustable camber plate attachment to the strut. The installation may incorporate an alternate upper spring perch/seat and/or mounting block (bearing mount). Any ride height change resulting from installation of camber plates is al-lowed. Caster changes resulting from the use of camber plates are permitted.

D. Differential mount bushings may be replaced, but must attach in the factory location(s) without additional modification or changes. Differential position may not be changed. The amount of metal in a replacement bushing may not be increased relative to the amount of metal found in a standard bushing for the particular application. Solid metal bushings are specifically prohibited.

E. Transmission mounts may be replaced, but must attach in the factory location(s) without additional modification or changes. Transmission position may not be changed. The amount of metal in a replacement mount may not be increased relative to the amount of metal found in a standard mount for the particular application. Solid metal mounts are specifically prohibited.

F. Steering rack bushings may be replaced, but must attach in the factory location(s) without additional modification or changes. Steering rack position may not be changed. The amount of metal in a replacement bushing may not be increased relative to the amount of metal found in a standard bushing for the particular application. Solid metal bushings are specifically prohibited. This does NOT allow shimming or otherwise relocating the steering rack.

G. Camber bolts may be installed providing these parts use the original, unmodified mounting points and meet the restrictions specified in 14.5.B. Caster changes resulting from the use of camber bolts are permitted.

H. *Solid* axle suspension allowances:

1. Addition or replacement of suspension stabilizers (linkage connecting the axle housing or DeDion to the chassis, which controls lateral suspension location) is permitted.

2. Traction bars or torque arms may be added or replaced.

3. A Panhard rod may be added or replaced.

4. The upper arm(s) may be removed, replaced, or modified, and the upper pickup points on the rear axle housing may be relocated.

5. The lower arms may not be altered, except as permitted under 14.8.C, or relocated. Methods of attachment and attachment points are unrestricted, but may serve no other purpose (e.g. chassis stiffening). This does not authorize removal of a welded-on part of a subframe to accommodate the installation.

I. Camber kits, also known as camber compensators, may be installed. These kits consist of either adjustable length arms or arm mounts that provide a lateral adjustment to the effective length of a control arm. Alignment outside the factory specifications is allowed. The following restrictions apply:

1. On double/unequal arm (e.g. wishbone, multi-link) suspensions, only the upper arms OR lower arms may be modified or replaced, but not both. Non-integral longitudinal arms that primarily control fore/aft wheel movement (e.g. trailing arm(s) or link(s) of a multi-link suspension) may not be replaced, changed, or modified.

2. On arm-and-strut (MacPherson/Chapman) suspensions, the lower arms may be modified/replaced OR other methods of camber adjustment as allowed by paragraphs 14.8.B, C, or G may be used, but not both.

3. On swing or trailing arm suspensions, the main arms may not be modified or replaced, but lateral locating links/arms may be modified or replaced.

4. The replacement arms or mounts must attach to the original standard mounting points. All bushings must meet the requirements of 14.8.B. Intermediate mounting points (e.g. shock/spring mounts) may not be moved or relocated on the arm, except as incidental to the camber adjustment. The knuckle/bearing housing/spindle assembly cannot be modified or replaced.

Note: Many modern suspension designs known by other names, actually function as double A-arm designs. These include the rear suspensions on 88+ Honda Civic/Integra, Neon, E36 BMW, and most “multi-link” and are covered by 14.8.I.1.

J. On strut-equipped cars, the strut’s lower integral mounting bracket, for attachment to the upright or spindle, is unrestricted provided it attaches to the stock location. Any resulting change to the position of the strut centerline is allowed. Such brackets shall serve no other purpose. This does not allow for changes to the integral steering arm on cars that have the steering arm integrated with the strut body.

K. Changes in alignment parameters that result directly from the use of the allowed components are permitted. For example, the dimensional changes resulting from the use of a cylindrical offset bushing that meets the restrictions of 14.8.B are allowed, including those resulting from a change in the pivoting action to:

(1) about the mounting bolt, or

(2) about the bushing itself.

L. Subframe mount bushings may be replaced, but must attach in the factory location(s) without additional modification or changes. Subframe position may not be changed. The amount of metal in a replacement bushing may not be increased relative to the amount of metal found in a standard bushing for the particular application. Solid metal bushings are specifically prohibited.

14.9 Electrical System

A. The make, model number, and size of the battery may be changed but not its voltage. Relocation of

the battery or batteries is permitted but not into the passenger compartment. If the battery is relocated and the original battery tray can be removed by simply unbolting it, the tray may be removed, or relocated with the battery. Holes may be drilled for mounting or passage of cables. Longer cables may be substituted to permit relocation. The number of battery or batteries may not be changed from stock. The area behind the rearmost seat is not considered to be within the passenger compartment.

B. The addition of electrical grounding cables and associated distribution blocks/terminals is permitted. Holes may be drilled for mounting only. This does not permit the use of electrical enhancement components such as condensers, voltage controllers, etc.

14.10 Engine *and drivetrain*

Engine and transmission must remain unmodified, including emissions equipment, except as noted below. *All emissions monitoring system hardware and software must be operationally functional as originally intended by the manufacturer. Tampering with emissions system software and/or hardware to create or cloak non-compliance is not permitted. Some examples of emissions system tampering are O2 foolers, disabling or deactivating Check Engine Light (CEL) code indication, backdating ECU internals from OBD2 to OBD1, etc.*

A. Internal baffling of oil pans may be added or modified. Addition or modification of windage trays, crankshaft scrapers, and oil pump pickups is not allowed.

B. Original equipment traction control systems may be electrically disabled, but not removed or altered in any other way.

C. The air intake system up to, but not including, the engine inlet may be modified or replaced. The engine inlet is the throttle body, carburetor, compressor inlet, or intake manifold, whichever comes first. The existing structure of the car may not be modified for the passage of ducting from the air cleaner to the engine inlet. Holes may be drilled for mounting. Emissions or engine management components in the air intake system, such as a PCV valve, or mass airflow sensor, may not be removed, modified, or replaced, and must retain their original function along the flow path.

D. Exhaust manifolds and headers may be replaced with alternate units which are emissions-legal. Relocation of the oxygen sensor on the header is permitted. Alternate oxygen sensors, including heated types, are permitted. This allowance does not permit relocation of the catalytic converter (see 13.10.E). Exhaust heat shields may be modified the minimum amount necessary to accommodate allowed alternate exhaust components.

E. STS, STS2:

Catalytic converters may be replaced by aftermarket units. Replacements must:

1) Be certified for use in that vehicle application by the manufacturer or reconditioner,

2) Bear correct EPA-mandated labeling,

3) Be of the OE quantity and type (i.e. oxidation, three-way, etc.) and

4) Be used in the same location(s) as the OE converter(s).

This does allow for high performance replacements, provided they meet all restrictions herein.

STX, STU:

Any high flow catalytic converter(s) are allowed, but must attach within six inches of the original unit. Multiple catalytic converters may be replaced by a single unit. The inlet of the single replacement converter may be located no further downstream than 6" along the piping flow path from the original exit of the final OE converter.

F. The engine management system parameters and operation may be modified only via the methods listed below. Any and all modifications must meet or exceed the applicable *EPA tailpipe* emissions standards for the year, make, and model of the car. These allowances also apply to forced induction cars, except that no changes to standard boost levels, intercoolers, or boost controls are permitted. Boost changes indirectly resulting from allowed modifications are permissible, but directly altering or modifying the boost or turbo controls, either mechanically or electronically, is strictly prohibited.

1. Reprogrammed ECU *(via hardware and/or software)* may be used in the standard housing. Traction control parameters may not be altered. Altered engine controllers may not alter boost levels in forced induction engines.

2. Electronic components may be installed in-line between an engine's sensors and ECU. These components may alter the signal coming from the sensor in order to affect the ECU's operation of engine management system. Example: fuel controllers that modify the signal coming from an airflow sensor.

3. Fuel pressure regulators may be replaced in lieu of electronic alterations to the fuel system. It is not permitted to electronically modify the fuel system AND replace a fuel pressure regulator.

4. Ignition timing may be set at any point on factory adjustable distributor ignition systems.

5. VTEC controllers and other devices may be used which alter the timing of factory standard electronic variable valve timing systems.

6. All *ST* vehicles must comply with the *EPA* tailpipe emissions test requirements as a minimum.

G. Any mechanical shift linkage may be used.

H. Any accessory pulleys and belts of the same type (e.g., V-belt, serpentine) as standard may be used. This allowance applies to accessory pulleys only (e.g., alternator, water pump, power steering pump, and crankshaft drive pulleys). It does not allow replacement, modification, or substitution of pulleys, cogs, gears, or belts which are part of cam, layshaft, or ignition drive or timing systems, etc. Any crankshaft damper or pulley may be used. SFI-rated dampers are recommended. Supercharged cars may not change the effective diameter of any pulley which drives the supercharger.

I. Upper engine shields made of plastic material, the purpose of which is to hide mechanical components in the engine compartment, may be removed if they have a solely aesthetic function.

J. Engine mounts may be replaced, but must attach in the factory location(s) without additional modification or changes. Engine position may not be changed. The volume of metal in a replacement mount may not be increased relative to the volume of metal found in a stock mount for the particular application. Solid metal mounts are specifically prohibited. Any non-metallic inserts may be used.

Hydraulic shock type rear engine locators, or bobble struts may be replaced by manufacturer's performance part, or aftermarket replacement part. This part must retain factory dimensions and attachment points, including factory design. (Example: If factory locator/bobble strut is gas or hydraulic piston type, replacement part must be gas or hydraulic piston type. No solid mounts may be substituted.)

K. Limited Slip Differentials

STS, STS2 - No limited slip differentials are permitted except for factory standard viscous coupler type units.

STX, STU - Only standard (as defined in Section 12.4) limited slip differentials (LSD) are allowed on AWD vehicles. For AWD vehicles that did not come with any type of limited slip differential (including center differential or transfer case), a single aftermarket LSD may be added. 2WD vehicles may use any LSD unit.

(14.11 Deleted)

14.11 STX

The STX class expands the vehicle eligibility limits beyond those specified for STS, and adds a limited number of allowed modifications. The allowances are as follows:

1. All allowances in STS carry over, including street tires, emissions, etc.

2. All restrictions regarding body type carry over.

3. Engine size allowance: up to 5.1, normally aspirated and 2.0, forced induction (single turbo or supercharger).

5. *(deleted)*

6. *(deleted)*

7. *(deleted)*

8. *(deleted)*

9. Additionally excluded cars: Audi S4 V8 ('04+), BMW M3 (E36 and E46), BMW M5 (all), Mazda RX-8, Mitsubishi Evo ('03+), Subaru WRX STi.

14.12 STU

STU follows the STX rule set, but raises the displacement limit for otherwise STX-legal vehicles to 3.1 liters for forced induction and to unlimited dsplacement for natural aspiration. Restrictions on wheel width are lifted and the maximum tire width is increased to 275 for FWD or RWD vehicles (but remains at 245 for AWD vehicles). Other than these limited exceptions, the STX ruleset as described in 14.12 applies. This class extends the Street Touring concept to cars including the Audi S4, BMW M3 (E36), Chevrolet Camaro, Dodge Neon SRT-

4, Ford Mustang, Mazda RX-8, Mitsubishi Evo ('03+), Pontiac Firebird and GTO, Subaru WRX STi, Volvo S60R, and Toyota Supra. Excluded vehicles include the BMW E46 M3 and E39 M5.

- Appendix A Changes:

"STREET TOURING CATEGORY

Vehicles eligible for this category must meet the Stock category eligibility requirements, as a minimum. Note that 3.2 'VEHICLE CLASSIFICATION', also applies to the Street Touring Category, including adding or removing cars from the exclusion lists. For listings below, a sports car based vehicle would include those that are 2+2 variants of 2 seat sports cars.

Street Touring Class S

Class Requirements and Restrictions:

Coupes/Sedans - 4 seats minimum (non-sports car based)
Engine Displacement:
- up to 3.1L normally aspirated or
- small turbocharged engines specifically listed below

No Limited Slip Differentials except standard viscous-types

Example Classifications:

- Acura RSX
- BMW 3-series (non-M)
- Ford Focus SVT
- Honda Civic
- Mini Cooper
- Nissan Sentra SE-R
- Nissan 240SX
- Mazda Protege
- Subaru Impreza 2.5RS

Also Included (Small Turbos):

- VW Golf/Jetta/Passat/Beetle 1.8T
- VW Golf/Jetta/Passat/Beetle TDI
- Audi A4 1.8T and TT (Coupe and Roadster), non-Quattro
- Mazda 323 GT/GTX
- Volvo S40 (except T5) and V40

Excluded:

All sports cars, sports car based models, examples include:
- Porsche (all)
- Datsun Z-car (2+2)

Street Touring Class X

Class Requirements and Restrictions:

Coupes/Sedans - 4 seats minimum (non-sports car based)

Engine Displacement
- up to 5.1L normally aspirated or
- up to 2.0L forced induction (single turbo/supercharger).

Example Classifications:

All STS Eligible Cars +
- Audi TT/A3/A4 (Quattro)
- Acura Integra Type R
- BMW M3 (E30 88-91)
- Honda Civic Si (06+)
- Mini Cooper S (including JCW)
- Nissan Sentra SE-R Spec V
- Mazda MazdaSpeed Protege
- Subaru WRX (2.0L)
- VW GTI/Golf/Jetta/Passat/Beetle 2.0T
- VW R32

Excluded:

All sports cars, sports car based models and
- Audi S4 (V8)

- BMW M3 (E36/E46 95+)
- BMW M5 (all)
- Mazda RX-8
- Mitsubishi Lancer Evolution (03+)

Street Touring Class U

Class Requirements and Restrictions:

Coupes/Sedans - 4 seats minimum
Engine Displacement
- any normally aspirated or
- up to 3.1L forced induction (single turbo/supercharger).

Example Classifications:

All STS and STX Eligible Cars +
- Audi S4
- BMW M3 (E36 95-99)
- Chevrolet Camaro 5.7L
- Pontiac GTO
- Mitsubishi Lancer Evolution ('03+)
- Subaru WRX STI
- Volvo S60R

Excluded:

All sports cars, sports car based models and
- Audi S4 (V8)
- BMW M3 (E46 '01+)
- BMW M5 (E39 & E60 '01+)

~~Supplemental~~ Class STS2

Class Requirements and Restrictions:

Sports Cars w/ 2 seats
Engine Displacement
- up to 1900 cc normally aspirated

No Limited Slip Differentials except standard viscous-types

Example Classifications:

- Mazda Miata ('90-'97)
- Toyota MR2 ('85-'89)
- Mazda RX-7 non-turbo
- Honda CRX
- Honda del Sol

Excluded:

- Lotus (all)
- Miata (99+)
- MR2 Spyder (00+)

- Separately from the above cleanup changes, the STAC has recommended that the following proposals be passed along to the BOD:
  - In Appendix A, Street Touring Class U, remove the line under "Excluded" which reads "BMW M3 (E46 '01+)" (ref. 07-001)
  - In 14.12.3, under STX (also affects STU), change the last portion to read "…forced induction (turbo(s) or supercharger(s))"
  - Change 14.12.4, under STX, to read: "Rim restriction: maximum width of 9 inches, diameter/offset unrestricted. Tire restriction: max width 265mm for FWD/RWD cars."
  - In 14.12.9, remove Mazda RX-8 from the list of excluded cars. (ref. 08-056)
  - In 14.13, under STU, change second sentence to read: "…and the maximum tire width is increased to 285mm for FWD or RWD vehicles…" (ref. 07-438)
  - Replace Section 14.6.A (STS/STS2) with:

    "Cross-drilled and/or slotted brake rotors may be fitted (same size/type/material as standard) provided all such voids are within the disc area, and comprise no more than 10% of that area."

- Replace Section 14.12.7 (STX/STU) with:

  "Non-standard brake rotors may be used provided they are of equal or larger dimensions (diameter and thickness) and made of ferrous material (e.g iron). Aluminum rotor hats are allowed. Cars originally equipped with solid (non-vented) rotors may utilize vented rotors. Cross-drilled and/or slotted brake rotors may be fitted provided all such voids are within the disc area, and comprise no more than 10% of that area.

  Brake calipers and mounting brackets may be replaced provided they bolt to the standard locations and the number of pistons is equal to or greater than standard.

  Drum brakes may be replaced with disc brakes of a diameter equal to or greater than the inside diameter of the standard drum. Such conversions must be bolted, not welded to the axle/trailing arm/upright.

  Changes to backing plates/dust shields/brake lines to accommodate these changes are permitted but may serve no other purpose."

STREET MODIFIED

- The SMAC has proposed the rules for a supplemental FWD class as follows: Add new section 16.4 as follows:

  - Add to 16.B (and renumber following subsection accordingly):

    3. Supplemental Class SMF

  - Add to Appendix A under STREET MODIFIED CATEGORY:

  Supplemental Class SMF

  SMF is a supplemental class open to front-wheel-drive vehicles only. Its rule set will follow that of Street Modified, with the following exceptions:

    - Minimum weight of 1650lbs. + 200 lb/liter. The 1.4 adder for forced induction still applies.
    - +150 pounds for 2-seat cars (CRX)

The intent of this proposal is to create a class for slightly heavier FWD cars that don't fit competitively within the current SM rules. Front-drive vehicles are still eligible to compete in SM or SM2 under those classes' present weight minimums. If the proposal for reduced minimum weights for tires 275mm or smaller is accepted for Street Modified, it will not be applicable to SMF.

TECH BULLETINS

1. Street Prepared: The following new listing, effective immediately upon publication, has been recommended by the SPAC and approved by the SEB:

   Saturn ION Redline DSP (ref. 08-334)

ROADRALLY BOARD MINUTES

ROADRALLY BOARD | SPORTS CAR CLUB OF AMERICA, INC. | *June 7, 2008*

The *RoadRally* Board (RRB) met in person at the Clarion Hotel, Milwaukee Wisconsin, on June 7, 2008.

Attending were: Kevin Poirier, Chairman; members Rick Beattie, Jim Wakemen Jr., and Lois Van Vleet; Pego Mack, National Office; and former member Tim Craft. Duck Allen, Board of Directors Liaison joined via conference call. Charles Edwards, Secretary, could not attend.

Chairman Poirier called the meeting to order at 8:20 am CDT. Beattie accepted appointment as the meeting secretary.

The final version of the May, 2008, minutes was accepted (Beattie/Van Vleet).

Proceedings

1. RRB Membership

Discussion: With Mr. Edward's planned departure after the 2008 USRRC, the RRB will be one member short of the minimum and three members short of the maximum permitted. The RRB will continue to review resumes as they are received and request letters of interest from SCCA members that could fill specific needs. The RRB will stagger terms to minimize multiple departures in a single year.

2. 2008 USRRC

Discussion: The RRB reviewed planning by the Oregon Region for the October 31 to November 2, 2008, USRRC. The RRB is particularly hopeful for the Friday, Halloween GTA event and the Aristotle Rule suggested by Van Vleet that no two M&Ms can be executed at the same intersection.

3. RRB Documents

Discussion: The RRB reviewed all the current *RoadRally* documents. The Official Observer's Report will be extensively revised to provide the RRB with a better understanding of the conformance of an event to *RoadRally* standards. Responsibilities for revisions are as listed in the action items.

4. Combining Classes, Limited Attendance Rallies

Discussion: The RRB is reluctant to combine classes on Regional or National events or place a minimum attendance for inclusion in the Championship. The RRB will put forward an alternate proposal on the SCCA Forum that defines what must be run for a contestant to be eligible for awards (Poirier/Beattie).

5. SCCA Forum

Discussion: Beginning with action items from this meeting, the RRB will exclusively use the SCCA Forum for discussion, information and other postings about the *RoadRally* program. The RRB member posting the item will monitor the discussion for action at the monthly conference calls. Other posts will initially be monitored by Wakemen (Poirier/Beattie).

6. National GTAs

Discussion: Due to few SCCA regions running National GTA events, the RRB proposes eliminating National GTAs only from the program. A Forum post will offer more information for member comment (Poirier/Beattie).

7. RRB Committees

Discussion: The RRB proposes making Rules Committee members subject to a minimum 3 year term and maximum 6 year term similar to the RRB member rules. A Forum post will offer more information for comment (Beattie/Wakemen). The RRB also will act to increase the role of the Divisional Stewards as required by the policy manual. (Beattie/Wakemen)

8. Safety Stewards

Discussion: *RoadRally* Safety Stewards and Instructors will be asked to submit an electronic form every five years to maintain their license (Poirier/Van Vleet).

9. Member Survey

Discussion: The RRB will prepare an on-line *RoadRally* participant survey to better gauge the full range of the *RoadRally* competitors.

10. RoadRally Safety and the Waiver

Discussion: In accordance with comments from SCCA Risk Management the RRB concurs that a contestant's decision to stop competition because of safety concerns is separate from the competition regulations themselves and is therefore not claimable. A Forum reply will more fully explain the RRB's position (Poirier/Beattie).

Action items

- ✓ Documents
  - Beattie through the RC – RFOs, Safety Steward Manual;
  - Beattie - Policy Manual
  - Beattie - Regional *RoadRally* Handbook, Regional GTA Handbook;

Poirier – Observer's Report;
Wakemen – Safety Steward Licensing Renewal Form;
Poirier through All – Competitor Survey;

- ✓ Forum Posts
  Wakmen – Championship Proposal
  Beattie - Safety, RC Tenure, National GTA Series; and
- ✓ Wakemen - Divisional Steward Responsibilities.

Next meeting
July 2, 2008, at 7:30 pm CDT via conference call.

The meeting was adjourned at 6:40 pm CDT (Van Vleet/Beattie).

Submitted by Rick Beattie, Meeting Secretary

QUICK LINKS

The following items have been removed from regular inclusion in FasTrack News and can be found on SCCA's Web site at the following links:

CLUB RACING

Accredited Driver Licensing Schools: http://www.scca.com/contentpage.aspx?content=39

Forms: http://www.scca.com/contentpage.aspx?content=45

Technical Forms: http://www.scca.com/contentpage.aspx?content=74

Scrutineer's Forms: http://www.scca.com/contentpage.aspx?content=77

Vehicle Homologation Forms: http://www.scca.com/contentpage.aspx?content=79

General Competition Rules (GCR): http://www.scca.com/contentpage.aspx?content=44

2008 Runoffs Home Page: http://www.scca.com/Runoffs

SOLO

Forms: http://www.scca.com/contentpage.aspx?content=60

Rulebook: http://www.scca.com/contentpage.aspx?content=61

2008 Tire Rack SCCA Solo National Championships: http://www.scca.com/event.aspx?hub=6&event=12143

RALLY

Forms: http://www.scca.com/contentpage.aspx?content=49

Rulebook: http://www.scca.com/contentpage.aspx?content=50

SCCA NATIONAL CONVENTION

Event page: http://www.scca.com/event.aspx?hub=6&event=11083

EVENT CALENDAR: http://www.scca.com/events.aspx?hub=10

Fastrack news
official SCCA member notification
EFFECTIVE FIRST DAY OF THE COVER MONTH UNLESS OTHERWISE NOTED September 2008

BOARD OF DIRECTORS MINUTES

BOARD OF DIRECTORS' MINUTES | SPORTS CAR CLUB OF AMERICA, INC. | *August 11, 2008*

The Board of Directors, Sports Car Club of America, Inc. met via teleconference August 11, 2008. The following members participated: , R. J. Gordy, Chairman, Howard Allen, Jim Christian, Philip Creighton, Larry Dent, Bob Introne, Bob Lybarger, Lisa Noble, Andy Porterfield, John Sheridan, Mike Sauce, K.P. Jones and Jerry Wannarka. Jeff Dahnert, Vice President of Finance, Terry Ozment, Vice President of Club Racing, and Eric Prill, Vice President, Marketing and Communications, also participated.

Note – Minutes are for reference only subject to Board approval in September.

MOTION: To approve the minutes of the July 7, 2008 meeting. (Porterfield/Dent) PASSED, Unanimous

PRESIDENT'S REPORT

On behalf of Jim Julow, Terry Ozment reported on some minor schedule changes at the Solo Nationals. The BoD Town Hall meeting for the Solo Nationals will be held on Tuesday September 16th at 4PM and that the Runoffs Town Hall meeting is scheduled for Tuesday October 7th at 6PM both at the Liebler Pavilion at Heartland Park Topeka.

TREASURER'S REPORT

Jeff Dahnert reported that through June 2008, we were slightly ahead of our budgeted operating income, although investments did not do well. The advance approved in May of 2008 to SCCA Pro Racing has been repaid.

LIAISON REPORTS

CLUB RACING BOARD – CHRISTIAN, WANNARKA

A teleconference was held on Tuesday, August 6, with all members and liaisons participating. Terry Ozment, John Bauer and Kevin Yaghoubi from the Club Office also participated.

Terry introduced Kevin who has been hired as Technical Coordinator in Club Racing.

Terry then discussed a number of operational Runoffs related issues that needed CRB input. Region of Record for several folks racing different car classes in different Divisions continues to be troublesome for Poinstkeepers in tracking their points. The Staff is drafting a proposal that will be sent to the CRB and on to the BoD which will address this for next year.

A number of Runoffs competitors will be asked to have a "black box" installed in their cars to obtain track data to be used to assist in performance adjustments to the various cars. Procedures for mounting units and data download were discussed. Possible classes being considered for involvement are: T2/3, SSB/C, H/F Production and FC.

The concept of waiving minimum requirements for Runoffs participation from NORPAC was raised through the GT ad hoc committee. Consensus was that any deviation at this late date would be unfair to the entrants who had followed the rules.

A status update on the fuel testing review was given by Dave Gomberg. He has identified a laboratory that is interested and capable of testing fuel samples for the most significant adulterants on the banned additives list. At this time, the cost would be in the neighborhood of $300 per sample plus the cost of the sampling kit and shipping. This information is to be considered very preliminary as work continues to identify other laboratories and costs.

A number of GCR changes primarily oversight and verbiage clean ups were discussed. These items will be presented to the BoD at its September meeting.

A number of tracks have practice days sometimes with, but mostly without, SCCA involvement. While there are guidelines for how this must be done with SCCA involvement, there is limited distribution on the guidelines. A review will be initiated as to the feasibility of formalizing these guidelines and possibly recognizing them in the GCR. It is further recognized that minimal staffing would be needed, and things like judicial requirements and other specialties such as Timing and Scoring could be excluded. This might be an opportunity for Regions to use in way to offset event costs.

The Formula Car ad hoc committee will be asked to prepare guidelines for incorporating the Pro Atlantic 016 chassis in the current

CONTENTS

BOARD OF DIRECTORS	**1**
Board of Directors Minutes	1
CLUB RACING	**5**
CRB Minutes	5
Technical Bulletin	9
COURT OF APPEALS	**10**
SOLO	**13**
SEB Minutes	13
RALLY	**16**
RoadRally Board Minutes	16
RallyCross Board Minutes	18
QUICK LINKS	**20**

Club Racing format. It is recognized that the car is heavier, has different wings and side pods, and the engine generates more power all of which will need to be considered.

The SRF driver head/rollbar clearance issue will be addressed in a technical bulletin which will essentially say that seat modifications, but not relocation, can be done to enhancing the comfort and safety of the driver.

Apparently there is a concern that the supplies of camshafts and crankshafts will become limited in the future for FC. Consequently, there are requests to recognize a secondary supplier. With the experience gained with the past FC manifold issue, the CRB is walking slowly on this issue. The first step will be to verify the need and a report then generated to suggest resolution if the need exists.

The remainder of the meeting was devoted to specific membership requests.

EXECUTIVE STEWARDS – LYBARGER

The Execs are continuing to update their STRAP.

They have been thinking of only not waivering the safety items; ie; seat belts, helmets, suit and the like. They have not come to a complete consensus yet.

They also have been trying to find stewards to work at the Runoffs, but need more people to come and work.

SCCA FOUNDATION - DENT
Howard is out of town attending a special TRSS event (more on that in a moment) but he indicates the number of Street Survival's currently scheduled is about 28.

The event he attended was a special promotional Street Survival event at the New Hampshire Motor Speedway. Bruton Smith's company now owns the track and they were looking for a community involvement event to show they are not just a corporation (previously owned by an individual that lived in the area) and they picked TRSS. To build interest, they brought in Kyle Busch to go through a condensed version of the school along with 5 teenagers that had previously gone through the school. As expected, a significant amount of press attended.

Also attending was Matt Edmunds from Tire Rack and key players with the BMW CCA Foundation. The trip was worth it for Howard just for the chance to talk with their Foundation folks and start to build a direct relationship. We are now discussing a joint conference for training and sharing experiences. We will have more details on this when we get together during the Runoffs.

In addition to this, efforts are underway to get on the Today show, which help us break through to the general public. However, they are just at the beginning of that effort.

Also, the voting on the AMEX Project award is going well for TRSS; out of 84 programs nominated, we are floating between second and third right now. This is the program I spent considerable time and effort in preparing the nomination papers, all sent to BoD members some weeks ago.

SOLO EVENTS BOARD – NOBLE, INTRONE

Nationals
The SEB had representatives at HPT in July to observe the two courses being laid out for Nationals.

Alternative fueled car demonstration runs at Nationals are still being considered. Letters are being sent to some major manufacturers of production cars. Safety concerns for some of these vehicles have been investigated. Most current technology used was found to be of no special concern according to local Topeka fire and safety officials. CRB Liaison, Jerry Wannarka was DuJour Director on the July call, he suggested sharing information on these cars with the CRB.

SEB Membership
There was more talk about reorganizing the SEB as mentioned in the May Liaison report. The SEB Chair, Tina Reeves is working on a written proposal giving us some history of the SEB, explain the reason for the request and how decisions would be made on who would be recommended to the BoD.

Stock Class
In addition to discussion of the 2010 Stock Class reorganization, the Stock Advisory Committee is looking at a sunset rule for the classThis is going out for member input. Copied below is the request for member input.

The SAC is proposing a sunset rule for stock class cars. The rulebook does not include a process where aging cars are retired. These cars usually have limited spare parts availability, spotty or non existent documentation, or a general lack of availability. While they should remain eligible to compete the SAC believes the Divisionals, Tours, and the National Championships should be limited. The limitations would be as follows beginning 2010 and the cars will remain in Appendix A but will be notated as retired.

1. 25 years from model year designation. (Example - 1985 Corvette would be eligible to compete in contingency events through the 2010 season.)

TIME TRIALS ADVISORY COMMITTEE - NOBLE

TTAC has been quiet over the summer as they are busy with a full schedule of events.

The Driver Instructor's group is working on their program which will add value to PDX participants.

OLD BUSINESS

Eric Prill reviewed the Spec Miata Tire Test report.

MOTION: To defer the Spec Miata Tire decision until the September face to face meeting. (Dent/Sauce) PASSED Voting NO, Jones, Gordy

NEW BUSINESS

Jim Christian reported that groundbreaking on High Plains Raceway, in Colorado, is scheduled for August 15th, 2008.

There was discussion on a proposal to waive the requirements for qualification for the runoffs, to only two National races in 2008.

MOTION : To authorize outgoing Directors to receive traditional compensation for attendance at the 2009 National Convention. (Sauce/Lybarger) PASSED Unanimous, Abstaining, Dent Jones Porterfield

MOTION: To approve the following changes to the RallyCross Roles for 2009, as submitted by the RallyCross Board. (Allen/Sheridan) PASSED Unanimous

Effective Jan. 1, 2009.

4.1 Sections 1 (all), 2 (all) and 3 (all), 4.1, 5 (all except 5.2.E), 6.1, 6.2.b, 6.3 and 7 (all) of these rules are mandatory for all SCCA sanctioned RallyCross events.

5.2.E All RallyCross events must use a cumulative scoring method with no dropped runs.

6.2.C.2.d Tires must be the original size plus/minus 20mm cross section and 5% aspect ratio.

6.2.C.13 Shocks/dampers may be replaced with OEM or aftermarket replacement units intended for the specific year make and model used. The stock spring must be used as it was on the OEM unit. The spring perch must be factory welded to the damper or use the exact attachment method and position as OEM. Adjustable dampers are only allowed if the OEM unit was adjustable and must retain the same number of adjustments or fewer as OEM. Remote reservoir shocks are only allowed if they are exact OEM units.

6.2.C.14 The front sway bar may be replaced or removed. A replacement front sway bar may serve no other purpose than originally intended by the vehicle manufacturer. In the case where the front sway bar is also a suspension locating link, stock geometry and methods of attachment must be maintained.

6.2.C.15. Any wheel alignment settings may be used provided the settings can be accomplished within the unmodified adjustment range as delivered from the factory. Any alignment techniques allowed by the factory service manual from the vehicle manufacturer may also be used.

Delete 6.2.D.4.d in its entirety. (This allows prepared category vehicles to remove exhaust catalysts)

6.2.D.14 On carburetor equipped cars, jets, accelerator pumps, power valves, metering rods, vacuum secondary and metering springs may be replaced. Removal of choke plates, linkage and shafts is allowed. No machining allowed of any carb component.

6.2.D.15 Vehicles may substitute one differential with a mechanically governed limited slip or locking unit of an alternate type. This includes spools and welded stock differentials. This does not allow the use of a differential with external controls (electronic or otherwise) to regulate slip or locking. Differentials must be contained in a stock unmodified housing/third member with stock or optional ring and pinion ratios available for the specific model, body, and year of the vehicle only. 4wd vehicles may not substitute more than one differential with an alternate type.

6.2.D.16 Batteries may be substituted with any type. Relocation of the battery or batteries within the engine compartment or trunk area/luggage compartment behind the rearmost seats is permitted. Longer battery cables may be substituted to permit relocation and holes may be drilled to accommodate mounting of the battery and cables.

6.2.D.17 Accessory drive pulleys and belts may be replaced.

6.2.E.6 Side and rear windows may be removed or replaced with Lexan or equivalent. Windshield may be replaced with Lexan or equivalent with addition of a full roll cage built to SCCA Improved Touring specifications or better.

6.2.E.10 The shape of the body must remain recognizable as that of the manufacturer's make and model. The body must be made of a fire resistant material. Doors, hoods, trunk lids, sunroofs, hatchbacks, etc. need not function as originally designed. Bumpers, grilles, lights, glass, and trim may be removed. Side mirrors and tail/stop lights are not required. Any edges created by these modifications that the driver or passenger may contact must be properly insulated to prevent injury. Roof panels must be metal of at least the same thickness as original. Sunroof panels may be replaced with sheet metal of at least the same thickness as an original roof skin without sunroof. Inner roof structure may only be modified with addition of a full roll cage built to SCCA Improved Touring specifications or better.

6.2.E.14 - Any fuel system may be used provided gasoline or diesel fuel is used. Any NON-STOCK fuel cell, filter or pump located in the passenger compartment must be shielded by a metal bulkhead. Any fuel lines running through the passenger compartment must be of metal or metal braided construction.

MOTION: To adjourn. (Porterfield/ Lybarger)

Respectfully submitted,
Jim Christian
Secretary

CLUB RACING BOARD MINUTES

CLUB RACING BOARD |SPORTS CAR CLUB OF AMERICA, INC. | *Aug. 5, 2008*

The Club Racing Board met by teleconference on August 5, 2008. Participating were Bob Dowie, Chairman; Chris Albin, Stan Clayton, Dave Gomberg, Peter Keane, and Russ McHugh. Also participating were Jim Christian and Jerry Wannarka, BoD Liaisons; John Bauer, Technical Manager; Kevin Yaghoubi, Technical Coordinator; and Lauri Burkons, CRB Secretary.

In addition to those items covered in Technical Bulletin 08-08, the following decisions were made:

SUBMITTED TO BoD FOR APPROVAL

The following subjects will be referred to the Board of Directors for approval. Address all comments, both for and against, to the Club Racing Board. Comments may be e-mailed to crb@scca.com.

GCR

Item 1. Effective 11/1/08: Change section 8.4.8 as follows:

For all National Races held less than ~~31~~ *28* days prior to the commencement of the Runoffs,

Item 2. Effective 11/1/08: Change section 5.9.2.A and B as follows:

A. Annual Inspection

A full and complete Technical and Safety Inspection shall be performed by a Licensed Scrutineer (Divisional/National) on each car once a year (12 months). If the car passes Annual Technical Inspection, the tech inspector shall enter the date of the safety harness expiration in the logbook, the logbook shall be stamped with the "official" inspection stamp, dated, and signed.

~~Driver Safety Equipment shall comply with Section 9.3.19., Driver's Safety Equipment. The scrutineer performing the inspection shall affix a dated, non-removable sticker or decal to helmets that comply with Section 9.3.19.B.. This sticker or decal and the other drivers' safety equipment which must be worn may be checked by Grid or Scrutineering personnel on the starting grid.~~ *Driver's safety equipment is not required to be inspected at the time of annual inspection for the car.*

B. Minimum Event Safety Inspection/Tech Sticker

Minimum Safety Inspection—Minimum inspection for each event thereafter shall consist of reviewing the Vehicle Logbook. If it is in order, a Tech sticker shall be issued. *Driver's safety equipment is not required to be presented at this inspection.*

...

The participant agrees that the participant bears the ultimate responsibility at all times to ensure the safety of participant's vehicle~~,~~ *and* equipment, ~~and clothing~~ and compliance with all SCCA rules, regulations, and agreements, including but not limited to those contained in the GCR. Moreover, in the case of technical violations, the participant acknowledges, understands, and agrees that the participant is charged with full knowledge of every component of participant's vehicle and that even if a third party (for example, an engine builder) has caused the participant's vehicle to be noncompliant, the participant will still be responsible for and charged with any applicable violation and penalty.

Item 2. Effective 11/1/08: Add a sentence to the first paragraph of section 9.3.18 as follows:

9.3.18. DRIVER'S RESTRAINT SYSTEM

All drivers in SCCA sanctioned speed events shall utilize either a five, six or seven point restraint harness meeting the following specifications. A seven-point restraint harness is recommended. Arm restraints are required on all open cars including open Targa tops, sunroofs and T-tops. *Arm restraints shall not be worn in a manner which limits the ability of the driver to provide visible signals to other competitors while on the track.* The restraint system installation is subject to approval of the Chief Technical and Safety Inspector.

Item 3. Effective 11/1/08: Add new subsection A and B to section 9.3.19, and renumber items under the newly numbered subsection C as follows:

9.3.19. DRIVER'S SAFETY EQUIPMENT

All required driver's safety equipment must be worn at all times while on the track.

The participant agrees that the participant bears the ultimate responsibility at all times to ensure the safety of participant's driver's safety equipment, and compliance with all SCCA rules, regulations, and agreements, including but not limited to those contained in the GCR.

A. Annual Inspection

At the first event of the calendar year, all driver's safety equipment will be inspected by a licensed scrutineer. The scrutineer performing the inspection shall affix a dated, non-removable sticker or decal the left side of helmets that comply with Section 9.3.19.B., to indicate that all driver's safety equipment has been inspected and is in compliance with this section. This sticker or decal, which shall be placed on the helmet in a manner such that it is visible from outside the car with the driver seated and belted in the normal driving position, may be checked by grid or scrutineering personnel on the starting grid. The presence of other externally visible driver's safety equipment (gloves, balaclava, and suit) may also be checked by grid or gcrutineering personnel on the starting grid.

B. Reinspection

Throughout the racing season, a check of the condition and legality of driver's safety equipment should periodically be done by scrutineers in impound by group or class with the concurrence of the Chief Steward.

C. *Required Equipment*

The following required equipment shall be in good condition and free of defects, holes, cracks, frays, etc.

~~A~~ *1.* Driving suits that effectively cover the body from the neck to the ankles and wrists. One piece suits are highly recommended. All suits shall *bear an SFI 3.2A/1 or higher certification label or FIA 8856-2000 homologation.* Underwear *of fire resistant material shall be used except* with suits carrying FIA standard 8856-2000 or SFI 3-2A/5 or higher (e.g., /10, /15, /20) Certification Patch.

~~B~~ *2.* Crash helmets approved by the Snell Foundation with Snell sticker 2000 or later Special Application (SA2000), or by the SFI with a SFI Sticker 31.1a for open faced helmets and a SFI sticker 31.2a for closed faced (if purchased prior to 12/31/04), SFI 31.1 (if purchased after 1/1/05), or by the FIA standard 8860-2004. The back of each driver's helmet shall be labeled with a minimum of the driver's name. The use of a head and neck support system is highly recommended. Accident damaged helmets should be sent by the driver or his or her representative to the Snell Memorial Foundation, 3628 Madison Ave., North Highland, CA. 95660 (ph) 916-331-5073 (attn. Edward B. Becker). Details of the accident should be included. Freon based total loss helmet cooling systems are not allowed.

~~C~~ *3.* Gloves made of leather and/or accepted fire resistant material containing no holes.

~~D~~ *4.* Socks made of accepted fire resistant material.

~~E~~ *5.* Face coverings (balaclavas) of accepted fire resistant material for drivers with beards or mustaches. Hair protruding from beneath a driver's helmet shall be completely covered by fire resistant material. As an alternative to balaclavas, a full helmet skirt of accepted fire resistant material may be used. Double-layer balaclavas are recommended. If balaclavas are used voluntarily, they shall be of accepted fire resistant material.

~~F~~ *6.* Goggles or face shields, preferably made of new impact resistant materials, for drivers of open cars.

~~G~~ *7.* A driver's restraint system meeting SCCA standards (See Section 9.3.18.) shall be used at all times while on the track.

~~H~~ *8.* Shoes, with uppers of leather and/or nonflammable material that at a minimum cover the instep. Ventilation pinholes by the manufacturer are allowed.

Grand Touring

Item 1. Effective11/1/08: Add the new subsections 14 and 15 to section 9.1.2.F.4.b, as follows:

14. GTLite rear wing: The maximum width of the entire single element, flat plane wing assembly is 56.0 inches wide x 8.0 inches chord depth, but no wider than the body width including fender flairs. Wing endplates must fit within a rectangle measuring 8.5 inches long by 3.00 inches tall. Endplates must be flat with no curvature or Gurney tabs. A maximum 1/2 inch wicker-bill may be employed. The wing must be mounted to trunk/deck lid with two (2) mounting brackets. Each mounting bracket must attach to the wing at a point that is at least 2 inches inboard of the endplates. The internal parts of the brackets may protrude through the trunk/deck lid to allow for the two parts of each bracket to be fastened together. The rear wing must be mounted a minimum of 6.0 inches below the peak of the roof. Cars with a wagon-back style body (e.g., Civic, Fiesta, Mini, etc.) may have the wing mounted at the trailing edge of the roof, a maximum of 4.0 inches above the roofline. The mounting position will be measured between the highest points of the roof and wing. In either application, the trailing edge of the wing assembly must be located within an area defined by a point, 6 inches forward of rearmost bodywork and the rearmost bodywork measured at vehicle centerline.

15. GTLite front splitter: A front splitter may be added that is a flat single-plane, with an exposed top surface not more than 2.00 inches. The splitter shall be mounted flat. The splitter must not extend laterally any further than the widest point of the front fenders. The splitter must have no vertical deviations. Additionally, a maximum of four (4) rods or cables may be used to support the front, and/or the sides of the splitter. A single-plane vertical close-out panel may be used to bridge any gaps between the front fascia and splitter.

American Sedan

Item 1. Effective 11/1/08: Change section 9.1.6.D. 1.g.4 as follows:

Rocker arms may be replaced with any ~~individual~~ rocker arm. Shaft mounted rocker arms are ~~prohibited~~ *permitted* unless *otherwise* fitted as standard*, using a minimum of eight shafts*. Valve train stud girdles are allowed.

Item 2. Effective 11/1/08: Change section 9.1.6.D. 9.c as follows:

Fuel cells are mandatory. Cell size is not restricted. It shall be located within twelve (12) inches of the original fuel tank location *or behind the rear axle*.

RECOMMENDATIONS TO THE BoD

None

MEMBER ADVISORIES

The CRB wishes to remind the GT community that 996 Porsche Cup cars will be subject to the standard post race disassembly inspection procedures at the 2008 Runoffs.

NEW CAR CLASSIFICATIONS

None

REFERRED or TABLED

GCR

1. Final Sound manual review (Staff). Tabled for completion of review.
2. Clarify acceptance of licenses and medical forms (Ruse). Tabled for further discussion.
3. Require applicants to attach photos to logbooks (Ruse). Tabled for further discussion.
4. Opposition to prohibition of leaded fuels (Burns). Tabled for further discussion.

Formula

1. FA – Classify the Swift Atlantic 016 (Kloepfer). Tabled to work out details.
2. FC/S2 – Allow alternate camshaft manufacturers (Knapp). Tabled for further research.
3. FC/S2 – Allow an alternate camshaft (Knapp). Tabled for further research.

Grand Touring

GTL – Remove the FP roadster from GTL (Foley). Tabled for further discussion.

NOT RECOMMENDED

GCR

1. Require the driver's name on the front of helmets (Assarito). The current requirement is adequate.
2. Remove fees from the rule book (Ruse). The information is necessary.

Formula

FM – Explore the 6-port motor (Drummond). There is no proven need.

Grand Touring

1. GT2 – Classify the Viper SR-10 (Pintaric). The engine potential is outside the GT2 parameters.
2. GTL – Rescind the 100 lb penalty on 4-valve restricted cars (Foley). The engine is appropriately classified.
3. GTL – Allow the 3-valve Honda head on the EW, D15, and D16 engines (Maloney). These engines did not come with this architecture.

Spec Miata

1. Allow two clamps on the sway bars (Henry). This would increase the performance potential beyond the class parameters.
2. Require the 94-97 cars to use 4.3 rear axle ratio (James). This would increase the performance potential beyond the class parameters.

Previously Addressed

None

No Action Required

GCR

1. Add gas chromatography testing for fuel language to the rule book (Garza). Thank you for your input. The CRB is considering changes to fuel testing.
2. Support for FIA 1986 suits (Miller). Thank you for your input.

Formula/Sports Racer

FF – Question whether my nose conforms to rules (Campbell). The nose design does not meet the spirit of section 9.1.1.D.7.

FF – Clarify the aero issues, define undertrays and Venturi tunnels (Robinson/Campbell). Section 9.1.1.D.7 is adequate as written.

Grand Touring

1. GT1 – Fuel cell height input (Scarallo). Thank you for your input.
2. GTL – Slow the F Production MG (Zekert/Chima). Thank you for your input.

Resumes

None

CLUB RACING TECHNICAL BULLETIN

DATE: August 5, 2008
NUMBER: TB 08-08
FROM: Club Racing Board
TO: Competitors, Stewards, and Scrutineers
SUBJECT: Errors, and Omissions, Competition Adjustments, Clarifications, and Classifications.

All changes are effective 9/1/08 unless otherwise noted.

GCR

1. Correct section 4.4.4.D.3, p. 26, Regional License fee of ~~*$85*~~ $75, payable to SCCA; includes GCR.
2. Correct section 4.4.5.D.3, p. 27, National License fee of ~~$75~~ *$85*, payable to SCCA; includes GCR.
3. Correct GCR Item 2 in July Tech Bulletin to read: Change ~~9.2.1.G.1~~ *9.4.1.G.1* p.104 to read: All formula cars *registered or* homologated with SCCA as of 1/1/1986 must have a front impact attenuation device meeting at lease one of the following criteria:

Spec Miata

1. Add a Sentence to the end of section 9.1.8.C.4.b: In addition, a 3/8" steel hardware washer may be installed between the shock shaft and the bump stop. The washer shall be a maximum of 1/8" thick.

Sports Racer

SRF

1. Replace the first sentence of 9.1.9.C.22.b with the following: Seat modifications, including cutting, re-shaping and padding, are permitted to enhance the comfort and safety of the driver. Moving the location of the seat is not permitted.

Touring

T1

1. Chevrolet Corvette C6 Coupe (05-07), add to the specs as follows: Notes: Alternate GM oil pan #12630477 approved.

T2

1. Nissan 350Z Track/Touring/Standard (03-07), add the 2008 model year.
2. Pontiac Solstice GXP (2007), **(Effective 11/1/08)** add to the spec as follows: Saturn Sky.
3. Porsche Boxster S (00-03), add to the specs as follows: Notes: Porsche brake duct kit part #996-341-117-91 (left) and #996-341-118-91 (right) permitted.

COURT OF APPEALS

JUDGMENT OF THE COURT OF APPEALS
Wids Romeus vs. SOM, COA Ref. No. 08-09-NE
August 12, 2008

FACTS IN BRIEF
At the MARRS II Regional Race held at Summit Point Motorsports Park on June 1, 2008, Assistant Chief Steward Jerry Wannarka issued a Request for Action (RFA) to the Stewards of the Meet (SOM) to investigate a number of reports involving ITS # 21 driven by Wids Romeus. The reports included potential violation of GCR 6.11.2.B. (Yellow Flag), 2.1.4. (Reckless Driving), and 6.8.3. (Established Race Course). The SOM John Nesbitt, Joe Weller, and Walter Michael, Chairman heard witnesses, including Mr. Romeus, issued a 4 race weekend probation to Mr. Romeus, moved him to last in class finishing position, and assigned him a driver mentor. Mr. Romeus is appealing the severity of this decision.

DATES OF THE COURT
The Court of Appeals (COA) Dick Templeton, Fred Cummings (Alternate) and Bob Horansky, Chairman, met on July 31, August 7 and August 14, 2008 to hear, review and render a decision on the appeal. David Nokes, regular Court member, was out of the country and unavailable for all the deliberations.

DOCUMENTS AND OTHER EVIDENCE RECEIVED AND REVIEWED
1. Letter of Appeal from Wids Romeus, received by the COA July 25, 2008, and a video received July 31, 2008.
2. Official Observer's Report and related documents, received July 25, 2008.
3. Email statement from John Nesbitt, received August 4, 2008.
4. Email statement from Jerry Wannarka, received August 4, 2008.
5. Email statement from Walter Michael, received August 6, 2008.

FINDINGS
Mr. Romeus admitted to the SOM that he executed a pass under yellow which was clearly confirmed in the full race in-car video he provided. Mr. Romeus contends that this infraction should have been mitigated by his allowing the cars he passed to go by him. The GCR has no provisions for such self-corrections. The contention that his driving during the race was reckless and that there was metal-to-metal could not be substantiated by the video. The two off-course excursions appeared to be a case of over-driving into the corner, and did not involve or appear to affect any other cars.

DECISION
The Court of Appeals upholds the SOM decision on the pass under yellow, but not the metal-to-metal contact and other cited violations. Therefore, Mr. Romeus' penalty is modified. Mr. Romeus is to be moved down two finishing positions in class from his original finishing position, and put on a four-race weekend probation for the pass under yellow. A new probation letter will be issued citing only violation of GCR Paragraph 6.11.2.B. Mr. Romeus' appeal is well founded, and his appeal fee, less the amount retained by SCCA, shall be returned.

COURT OF APPEALS

JUDGMENT OF THE COURT OF APPEALS
ROBERT HINES VS. SOM, COA REF. NO. 08-10-NE
JULY 31, 2008

FACTS IN BRIEF

At the National Race held at Beaver Run Raceway, June 14-15, 2008, Robert Hines, Car #4 T2 protested Tommy Joe Martins, Car #51 T2 for violation of GCR 6.8.1. A-D (On Course Driver Conduct) and GCR 2.1.4 (Reckless or Dangerous Driving) for contact at Turn 6. Mr. Hines was forced to retire due to suspension damage and Mr. Martins continued.

The Stewards of the Meeting (SOM) Chuck Dobbs, Don Baker, Roy Bergman and Peter Roberts, Chairman, held a hearing, upheld the protest and awarded Mr. Martins the penalty of a Reprimand for his conduct. Mr. Hines is appealing that decision.

DATES OF THE COURT

The Court of Appeals (COA) David Nokes, Dick Templeton and Bob Horansky, Chairman, met on July 24 and 31, 2008, to hear, review, and render a decision on the appeal.

DOCUMENTS AND OTHER EVIDENCE RECEIVED AND REVIEWED

1. Letter of Appeal from Robert Hines, Driver of Car #4 T2, received by the COA July 18, 2008.
2. Official Observer's Report and related documents, received July 18, 2008.
3. Additional material from Peter Roberts, Chairman, SOM, received July 21, 2008.
4. Video Copies received July 29, 2008.

FINDINGS

There is no dispute that the contact between Cars #4 and #51 occurred during their race, and both drivers submitted videos as additional evidence to the SOM. Mr. Hines does not feel that the penalty is severe enough as he was leading at the time of the contact and Mr. Martins won the T2 race. Additionally Mr. Hines cites the document, "2008 Minimum/Standard Penalty Guidelines," being used as reference by stewards of all Divisions. In this document Mr. Hines cites the Rough Driving section which states: "Contact, only one car continues: CSA or RFA excluding the offender."

The SOM conducted an extensive review of Mr. Hines' Protest. They interviewed both drivers and reviewed the videos. Neither driver provided additional witnesses to the SOM and there was no reference to contact between these two cars in the race log by any corner station during their race. After their review, the SOM concluded that Mr. Martins should have exercised better judgment going through Turn 5 and then would have had better control of his car in Turn 6, thus avoiding the contact. They also determined that the evidence showed no intent by Mr. Martins to make contact, the contact was inadvertent and there was no clear evidence of Mr. Martins failing to allow sufficient racing room.

The minimum penalty information sheet presented to the COA by Mr. Hines clearly shows that they are guidelines. In the judgment of the SOM, they believed that in this specific case a reprimand penalty was sufficient to accomplish what the GCR penalty system is intended to do and is within their SOM powers.

DECISION

The Court of Appeals reviewed all of the evidence and documents received and agrees completely with the SOM in their decision. The COA denies Mr. Hines' appeal. The Court finds that his appeal is well-founded and his appeal fee, less the amount retained by SCCA, will be returned.

COURT OF APPEALS

Judgment of the Court of Appeals
Efren Ormaza vs. SOM COA 08-11-SE
August 15, 2007

PRIOR PROCEEDINGS AND FACTS IN BRIEF
On Saturday, June 14, 2008, at the Nashville Superspeedway Double Regional held June 14-15, 2008, a Chief Steward's Action (CSA) was filed penalizing Efren Ormaza, driver of ITC # 03, three finishing positions in class for violating GCR 6.11.2.b. (passing under double yellow) at Turn 5. Mr. Ormaza protested the CSA. The Stewards of the Meet (SOM), Rick Mitchell and Sara Snider, Chairman, held a hearing and after review of all evidence before them, upheld the CSA and denied the protest. Mr. Ormaza is appealing that decision.

DATES OF THE COURT
The National Court of Appeals (COA) Fred Cummings (Alternate), JoAnne Jensen (Alternate) and Dick Templeton, Acting Chairman, met on July 31, August 7 and August 14, 2008 to hear, review, and render a decision on the appeal. Robert Horansky (COA Chairman), having been an event official and Operating Steward for Mr. Ormaza's race, recused himself from participating in this proceeding; David Nokes, regular COA member, was overseas and unavailable to participate.

DOCUMENTS AND OTHER EVIDENCE RECEIVED AND REVIEWED
1. Appeal from Efren Ormaza and accompanying documents received by the COA July 29, 2008.
2. Official Observer's Report from Chairman SOM, received July 29, 2008.
3. Verbal testimony from Bob Horansky, Operating Steward, on July 31, 2008 prior to absenting himself from the COA hearing.
4. Race Control Logs from Clyde Kiser, event Chief Steward, received August 1 and August 2, 2008.
5. Emails from Sara Snider dated July 22 and July 27, 2008.
6. Email from Bill Perry, Steward of the Course, received August 1, 2008.
7. Timing and Scoring data received August 1, 2008.
8. Verbal testimony from SOM Rick Mitchell and Chairman Sara Snider on August 7, 2008.

FINDINGS
Unfortunately, the original Observer's Report for the event was lost in the mail. The original Report included two videos, one from Mr. Ormaza's car and one from Al McPeters, SM #96, the car directly in front of Mr. Ormaza's car; witness statements from both Mr. Ormaza and Mr. McPeters; and witness statements from several crew members and corner workers. The SOM Chairman had retained

a copy of the Report, but had not kept copies of any documents that accompanied the Report, including the videos.

The COA was able to obtain back-up copies of the race control logs, lap charts and results sheets. Accordingly the COA asked the SOM to participate in a conference call to discuss the evidence the SOM reviewed.

Mr. Ormaza's appeal addressed his contentions that:

1. He had been advised by email the following day that he had been penalized. He had been penalized utilizing a video from another car "in a different place on the track."
2. He should not have been penalized as "there was no other car involved" and the penalty "did not affect anybody's position at the end of the race."
3. He felt that having a Steward file the CSA was a conflict of interest, since the Steward is the father of one of Mr. Ormaza's competitors.

Following the race in question, Bill Perry (Steward of the Course/Black Flag Steward) prepared a CSA notifying Mr. Ormaza that he was being penalized by the Operating Steward, Bob Horansky, for passing under the yellow. Mr. Perry's son was a competitor in this race group, but was not involved in any way with the incident which resulted in the penalty given to Mr. Ormaza.

In their review of the videos from both drivers, the SOM determined that there were yellow flags displayed at Turn 5 and Start, along with yellow track signal lights shown in both Mr. Ormaza's and Mr. McPeters' videos. Mr. McPeters' car was directly in front of Mr. Ormaza's. Witness reports from Turn 5 as well as the Starters all confirmed that the passes occurred.

Ms. Snider testified to the Court that Mr. Ormaza left the track prior to the SOM reaching a final decision on the protest. Ms. Snider also testified she had tried to contact. Mr. Ormaza by phone Saturday evening, was unable to reach him, but obtained another phone number for him and did notify him of the SOM decision. He was notified by both email, and by surface mail following the event.

DECISION

The Court of Appeals upholds the decision of the SOM. Mr. Ormaza's contentions are not confirmed and he supplied no new evidence. Mr. Ormaza's appeal is considered not well founded and his appeal fee shall be retained by SCCA

The COA reminds all Stewards to retain copies of all evidence in every action for an event along with all documentation.

SOLO EVENTS BOARD MINUTES

SOLO EVENTS BOARD |SPORTS CAR CLUB OF AMERICA, INC. | *July 23, 2008*

The Solo Events Board met by conference call July 23. Attending were SEB members Dave Whitworth, Tina Reeves, Steve Wynveen, Jason Isley, Erik Strelnieks, and Donnie Barnes; Lisa Noble and Jerry Wannarka of the BOD; and Doug Gill, Brian Harmer, and Nancy Downing of the National Staff. Absent were Ron Bauer, Chris Dorsey, and Rick Myers. These minutes are presented in topical order rather than the order discussed.

Unless noted otherwise the effective date for all rule, class, and listing change proposals herein is 1/1/2009.

GENERAL

o SEB positions will be open at the end of 2008. Interested members are invited to submit their qualifications in writing to the SEB and BOD via the National Office.

o The SEB is seeking nominations for the Driver of Eminence and Solo Cup awards, to be presented at the Tire Rack Solo Nationals in September. Members should submit their nominations and reasoning in writing to the SEB via the National Office.

o Regions are reminded that they can create their own classing structures, since the preparation level rules and class listings are not among the mandatory sections noted in 1.1. Regional programs are encouraged to do this to meet the needs of their constituencies and encourage program growth.

SAFETY

o The MAC has recommended adding a safety requirement for splitter edges. To that end, the following proposal is published for member review:

Add new 3.3.3.B.23: "Bodywork protrusions below the bumper level (e.g. splitters) which extend beyond the outline of the fenders or bumpers when viewed from above, may not have sharp edges; the edges must be rounded, blunted, or taped."

STOCK

o The SAC has recommended publication of the following class change proposal, effective 1/1/2010, for member comment: Move to from GS to HS, Ford Focus SVT (ref. 08-366).

o The SAC has requested that the following, introducing a concept for a rule change proposal which would be incorporated into the rule book effective 1/1/2010, be published for member comment:

"The committee is proposing a sunset rule for stock class cars. The rule book does not include a process where aging cars are retired. These cars usually have limited spare parts availability, spotty or non-existent documentation, and/or a general lack of availability. While they should remain eligible to compete, the SAC believes their eligibility for Divisionals, Tours, and the National Championships should be limited. The limitations would be as follows beginning 2010 and the cars will remain in Appendix A but will be notated as retired: 25 years from model year designation. (Example – a 1985 Corvette would be eligible to compete in contingency events through the 2010 season.)"

o The SAC has advised the SEB that it believes the exclusion list will continue to grow or Solo risks obsolescing some very popular classes. Current participation levels have about 1/3 of stock class entrants in SS and AS. The SAC would like to expand upon these popular platforms. The SAC proposes to expand the performance envelope of Stock Class by effectively shifting classes down. This extends the life of the most popular classes in Solo. The value/performance ratio in the top two classes are unmatched and the SAC would like to see these cars remain competitive. The SAC considered creating a class between SS and AS. The choice was difficult but the SAC believes expanding the performance envelope creates more growth opportunity with minimal disruption. To create this space the SAC has to combine two classes. The addition of a class is not an option. We expect the membership's comments will help refine the proposal over the next 18 months.

The committee would like to propose the following alternatives for member comment. The effective date would be 1/1/2010.

o Option 1: (Split CS to ES/BS)

1. Move the current CS to ES (except for the MX5 '06+ and Solstice)
2. Move the current BS to CS
3. Move the current AS to BS
4. Move the current SS to AS
5. Move the following to SS:
   - Lotus Elise SC
   - Lotus Exige S (all)
   - 911 Turbo (996)
   - 2008 Viper
6. And if/when new/secondary market pricing and/or tire availability is appropriate the following would be considered:
   - 997 GT3
   - Audi R8

- 996 GT2
- Corvette ZR1
- Nissan GT-R
- Nissan GT-R Spec V
- Lotus Eagle

o Option 2: (CS/BS Merger)

1. Move the current BS to CS
2. Move the current AS to BS
3. Move the current SS to AS
4. Move the following to SS:
   - Lotus Elise SC
   - Lotus Exige S (all)
   - 911 Turbo (996)
   - 2008 Viper
5. And if/when new/secondary market pricing and/or tire availability is appropriate the following would be considered:
   - 997 GT3
   - Audi R8
   - 996 GT2
   - Corvette ZR1
   - Nissan GT-R
   - Nissan GT-R Spec V
   - Lotus Eagle

STREET TOURING

o The following reorganization of the class naming conventions in ST is proposed for member feedback:

Rename STS to ST and rename STS2 to STS.

(STX and STU remain unchanged)

STREET MODIFIED

o The following class rename proposal is proposed for member feedback:

Rename SM2 to SSM.

NOT RECOMMENDED

o Toyota X Runner classing (ref. 08-301) Comment: not classed at this time due to SSF-related concerns.
o Mini Cooper S move to DS (ref. 08-313)
o Lotus sport seats (ref. 08-327)
o Honda CRX classing change (ref. 08-333)
o BMW 325ix classing change (ref. 08-338)
o Chevrolet Trailblazer SS classing (ref. 08-385) Comment: not classed at this time due to SSF-related concerns.

TECH BULLETINS

1. Stock: The following new listings, effective immediately upon publication and recommended by the SAC have been approved by the SEB:

   Chrysler 300M ('99-'04) HS (ref. 08-276)

2. Stock: Add to 12.4 as a new second sentence: "Port-installed options provided by the factory are considered to be the same as those installed on the factory production line." *Comment*: 12.4 allows configurations which could verifiably have been ordered, whether they actually were or not, to be used in Stock classes. (ref. 08-239)

3. Street Touring: The following correction to a previously-published item has been noted by the STAC: The item which read as follows:

   Change 14.12.4, under STX, to read: "Rim restriction: maximum width of 9 inches, diameter/offset unrestricted. Tire restriction: max width 265mm for FWD/RWD cars."

   should have read:

   Change 14.12.4, under STX, to read: "Rim restriction: maximum width of 8 inches, diameter/offset unrestricted. Tire restriction: max width 245 mm. For 2WD vehicles (FWD or RWD), these maximums are increased to 9 inches and 265 mm, respectively."

4. Prepared: The PAC has noted that the following item in Appendix A, Prepared Class C, should have been removed: "All vehicles have maximum track per Section 17." (ref. 08-395)

5. Prepared: Per the PAC, in Appendix A, Prepared Class X, Section 1.c should read as follows:

"c. Aerodynamic Aids: Wings may be added, removed, or modified. Non O.E. wings may only be attached to the rear deck/hatch area behind the centerline of the rear axle. The total combined surface area when viewed from the top of the airfoil sections(s) of all wings shall not exceed 8 square feet. The area shall be computed by multiplying the width and depth of the wing without regard to the curvature of the element(s). The number of wing elements is limited to 2 and the area of each must be added separately. Wings, and any component thereof, may not extend beyond the vehicle width, as defined by the outermost portion of the vehicle doors, less mirrors, door handles, rub strips, and trim. In addition, no portion of the wing or its components may be more than 6" forward of the rear axle, more than 0" beyond the rear most portion of the bodywork, or more than 6" above the roofline of the vehicle, regardless of body style. Reinforcements to the wing mounting area may be used, but may serve no other purpose. Wing endplate surface area is limited to 200 square inches each and limited to a maximum of two. For convertibles and roadsters *with no roof and targas with no rear window*, no portion of the wing may be higher than 12 inches above the wing's point of attachment to the body of the vehicle.

Front splitters are allowed and shall be installed parallel to the ground (within +/-3 degrees fore and aft) and may extend a maximum of 6 inches forward of the frond bodywork/fascia as viewed from above. Splitters may not extend rearward past the centerline of the front wheels. No portion of the splitter may extend beyond the widest part of the front bumper as viewed from above."

ROADRALLY BOARD MINUTES

ROADRALLY BOARD |SPORTS CAR CLUB OF AMERICA, INC.| *July 2, 2008*

The *RoadRally* Board (RRB) met via conference call at 7:30 pm Central Time.

Attending were: Kevin Poirier, Chairman; members Rick Beattie, Charles Edwards, Jim Wakemen Jr., and Lois Van Vleet; and Pego Mack, National Office. Duck Allen, Board of Directors was not able to attend. Chairman Poirier called the meeting to order at 7:30 pm CDT.

The final version of the June, 2008, minutes was accepted.

Proceedings

1. Regional event scorekeeping

Discussion: Regional event scorekeeping is a time-consuming task. A proposal to limit the number of single-region events that would be counted would likely impose a very heavy burden on the scorekeeper. Alternatives were discussed and postponed until the August meeting.

2. Combining classes

Discussion: The methold for combining classes that have only one or two competitors at any given event was referred to the Rules Committee for determination of mathematical factors and wording of the rule. The RRB remains reluctant to combine classes on Regional or National events or place a minimum attendance for inclusion in the Championship.

3. RRB Documents

Discussion: The RRB is developing a survey for those members who rally to gain insight into what the active membership wants from a rally experience.

4. Summary of referrals to Rules Committee

Discussion: The RRB has referred consideration of the following items to the Rules Committee: Definition of Opportunity; Definition of At; Combining classes.

5. Upcoming Events

Discussion: The National Rally events to be held in the DC Region is going forward, as are plans for Oktoberally. The USRRC is being written and will include a GTA.

6. Applications for RRB

Discussion: Resumes have been received and are being considered.

7. RRB Liaison

Discussion: The RRB received suggestions to eliminate the RRB Liaison for National Rallies and the usefulness of this proposal will be again discussed.

8. Photo Contest

Discussion: Three judges have been selected and submission of photos will be accepted between August 1 and November 3, 2008.

Next meeting

August 6, 2008, at 7:30 pm CDT via conference call.

The meeting was adjourned at 9:40 pm CDT (Van Vleet/Beattie).

Submitted by Chuck Edwards, Meeting Secretary

ROADRALLY BOARD MINUTES

ROADRALLY BOARD |SPORTS CAR CLUB OF AMERICA, INC.| *August 6, 2008*

The *RoadRally* Board (RRB) met via conference call at 7:30 pm Central Time.

Attending were: Kevin Poirier, Chairman; members Rick Beattie, Charles Edwards, Jim Wakemen Jr., and Lois Van Vleet; Duck Allen, Board of Directors; and Pego Mack, National Office
Chairman Poirier called the meeting to order at 7:30 pm CDT.

The final version of the July, 2008, minutes was accepted.

Proceedings

1. Division RoadRally Stewards Conference Call

Discussion: The conference call meeting went very well with 4 more attendees than previously. Discussion included whether a weekend member can be a rallymaster with the conclusion being Yes. It was noted that the event chairman and the RRSS must be regular members.

2. Upcoming national rallies

Discussion: The Washington DC region Labor Day weekend events have been pre-checked. Oktoberally and Quantum Leap will be long-distance pre-checked by Rick Beattie.

3. 2009 Proposed Rule changes

Discussion: The following items were discussed and approved to be issued for public comment. See published call for public comment memorandum for full details of each item:

A. Regional Events and Combining of Classes
B. Definition of "At"
C. Definition of "Opportunity"
D. Event Duration
E. Separation of Appendices
F. GPS Devices

4. Applications for RRB

Discussion: Resumes have been received and are being considered.

5. Old Business

Discussion: Reviewed status of action items from June RRB meeting, including revised Sanction Application and Safety Steward License Application. The use of SurveyMonkey.com has been approved for use as a means of conducting a survey of rally competitors.

6. New Business

Discussion: Discussed potential applicability of a yearly waiver card, aka Hard Card for RoadRally events.

Next meeting

September 3, 2008, at 7:30 pm CDT via conference call.

The meeting was adjourned at 10 pm CDT.

Submitted by Chuck Edwards, Meeting Secretary

RALLYCROSS BOARD MINUTES

RALLYCROSS BOARD | SPORTS CAR CLUB OF AMERICA, INC. | *July 14, 2008*

Call to order 8:15pm central:

In attendance: John Barnett, Mark Utecht, Mark Walker, Tom Nelson, Jayson Woodruff, Matt Nicols, Howard Duncan and Howard Allen

June minutes not yet complete

Safety Committee

Pending safety meeting to review current RxSS training and licensing program. Define and establish a RxSS Trainer license. Aug or Sept will have something for RXB to review.

New Region Programs – John Barnett

Get Jon O's e-mail. (done)

Rules

Little change from what was sent in July RXB agenda. 2009 rule change review.

Excluding 5.2.E from mandatory sections (accumulative scoring).

Mark U motion
Barnett Second
4-1-1 passed as amended

6.2.c.2.d Tire sizes and tread gap elimination

Mark U motion
Tom second
5-1 passed

6.2.c.13 OEM Spring perch location

Mark U motion
Walker second
6-0 passed

6.2.c.14 Front sway bar allowance (solo crossover)

Mark U motion
Jayson Second
4-0-2 passed as amended

6.2.C.15 Stock Alignment

Mark U motion
Nelson Second
6-0 passed

6.2.d.4.d Allows cat removal

Mark U motion
Jayson Second
4-0-2

6.2.d.14 Carb allowances

Mark U Motion
Matt Second
6-0 passed

6.2.d.15 Prep LSD

Mark U motion
Barnett second
6-0 passed

6.3.N Battery box

Mark U motion
Tom Second
5-0-1 Passed

6.2.d.16 Prep battery and re-location

Mark U motion
Second Walker
6-0 passed

6.2.d.17 Accessory drive pullies
Mark U motion
6-0 passed

6.2.e.6 Windshield replacements
Passed 6-0

6.2.e.10 Body panel clarifications
Mark U motion
Mark W second
5-1 as amended

6.2.e.14 Fuel Systems
Mark U motion
Tom second
6-0 pass

Motion to adjurn – Mark U
Second – Mark W

No issues from Howards

Adjourn at 10pm Central.

Submitted respectfully by Jayson Woodruff

RALLYCROSS BOARD MINUTES

RALLYCROSS BOARD |SPORTS CAR CLUB OF AMERICA, INC.| *August 11, 2008*

Call to order 8:07pm Central.

Mark U, Mark W, Tom Nelson, Jayson Woodruff and Pego Mack

Mark U motion to approve minutes, Nelson second. Pass 4-0

Agenda explained: Committee reports, new business: 2009 officers and chair. National Champs in Tennessee.

Safety Committee (Tom): Trying to get a meeting set up. 24hr conference line is available. At next RXB meeting will present any progress on training program, Safety Steward trainer license and RxSS trainer training program.

New region programs (John not present).

Rules (Mark U): Noted lack of discussion regarding rules on SCCA.com forum after posting anticipated changes. BOD is in progress of reviewing and possibly approving rule changes. Discussions on '09 rules book. Will post on SCCA RX site when approved.

New Business:

Mark W's term is up as chairman. Ask that other members start thinking about what officer positions they want to take or leave.
Current positions: Chair (Mark W), Secretary (Jay W), Rules Committee (Mark U), New Programs (John), Safety/Steward liaison (Tom)

Note Matt N joins telecon

National Championships: Mark U, Mark W, Jayson W, Matt N and John B attending. Tom is a maybe. Townhall with RXB will be Saturday night.

Las Vegas conventions this year: Feb 19-22. Chair report on Thur, seminars Fri-Sat. Town Hall Sat. Meet with BOD on Sunday.

Mark U motion to adjourn. Jay W second. Pass, 8:53pm Central.

Submitted respectfully by Jayson Woodruff

QUICK LINKS

The following items have been removed from regular inclusion in FasTrack News and can be found on SCCA's Web site at the following links:

CLUB RACING

Accredited Driver Licensing Schools: http://www.scca.com/contentpage.aspx?content=39

Forms: http://www.scca.com/contentpage.aspx?content=45

Technical Forms: http://www.scca.com/contentpage.aspx?content=74

Scrutineer's Forms: http://www.scca.com/contentpage.aspx?content=77

Vehicle Homologation Forms: http://www.scca.com/contentpage.aspx?content=79

General Competition Rules (GCR): http://www.scca.com/contentpage.aspx?content=44

2008 Runoffs Home Page: http://www.scca.com/Runoffs

SOLO

Forms: http://www.scca.com/contentpage.aspx?content=60

Rulebook: http://www.scca.com/contentpage.aspx?content=61

2008 Tire Rack SCCA Solo National Championships: http://www.scca.com/event.aspx?hub=6&event=12143

RALLY

Forms: http://www.scca.com/contentpage.aspx?content=49

Rulebook: http://www.scca.com/contentpage.aspx?content=50

SCCA NATIONAL CONVENTION

Event page: http://www.scca.com/event.aspx?hub=6&event=11083

EVENT CALENDAR: http://www.scca.com/events.aspx?hub=10

Fastrack news official SCCA member notification

EFFECTIVE FIRST DAY OF THE COVER MONTH UNLESS OTHERWISE NOTED October 2008

BOARD OF DIRECTORS MINUTES

BOARD OF DIRECTORS' MINUTES | SPORTS CAR CLUB OF AMERICA, INC. | *Sept. 4-6, 2008*

The Board of Directors, Sports Car Club of America, Inc. met in Topeka, September 4, through September 6, 2008. The following members participated: R.J. Gordy, Chairman; Howard Allen; Jim Christian; Philip Creighton; Larry Dent; Bob Introne; Bob Lybarger; Lisa Noble; Andy Porterfield; Mike Sauce; John Sheridan; K.P. Jones and Jerry Wannarka. Jim Julow, President; Jeff Dahnert, Vice President of Finance; Eric Prill, Vice President Marketing and Communications; Peter Lyon, Risk Management; Howard Duncan, Vice President Rally/Solo; Colan Arnold, Vice President Membership and Region Development; Terry Ozment, Vice President Club Racing; Ken Patterson, Chairman of the Stewards; and Bob Dowie, Chairman, Club Racing Board, also participated.

The Secretary acknowledges that these minutes are not in chronological order.

MOTION: To approve the minutes of the August 11th, 2008 meeting. (Allen/Lybarger) PASSED, Unanimous.

CONTENTS

BOARD OF DIRECTORS	**1**
Board of Directors Minutes	1
CLUB RACING	**32**
CRB Minutes	32
Technical Bulletin	40
COURT OF APPEALS	**42**
SOLO	**45**
SEB Minutes	45
RALLY	**NONE**
RoadRally Board Minutes	NONE
RallyCross Board Minutes	NONE
QUICK LINKS	**47**

PRESIDENT'S REPORT

Jim Julow reviewed recent changes in the staff at the National office. He reported on the status of the WC Vision activities. Club Racing entries appear to be down between 5% and 10%. Entries for the Runoffs are at 535, Solo National entries are nearing 1100.

FINANCE AND ADMINISTRATION

KP Jones reviewed budget recommendations from the Budget and Finance committee. Jeff Dahnert presented a financial report as of July 31, 2008.

RISK MANAGEMENT

Peter Lyon presented an overview of the current insurance market.

SOLO/RALLY and SCCA FOUNDATION

Howard Duncan reported on participation trends in the Rally and Solo programs. Participation in some programs are up slightly (Tour and Pro) others are down slightly. He indicated that the location of the 2009 Solo Nationals is still undecided.

MEMBERSHIP and REGION DEVELOPMENT

Colan Arnold reported that membership as of July was 49,906 which is up 294 since January. He also presented an overview of the 2009 annual waiver program, and convention planning activities.

MARKETING and COMMUNICATIONS

Eric Prill covered contingency programs, sponsorship and television agreements, as well as advertising programs.

CLUB RACING

Terry Ozment presented current participation trends. National participation for 2008 (9306 entries) is down 7% from 2007. Regional data is not complete for 2008. She reported on plans for the 2008 Runoffs, the Miata compliance program, the Chief Driver Instructor program, and the status of the GCR rewrite.

EXECUTIVE STEWARDS

Ken Patterson presented a proposal for the restructuring of Stewards Licenses, and reported on proposed revisions to the track review process.

LIASION REPORTS

SOLO EVENTS BOARD LIAISON - Bob Introne, Lisa Noble, Liaison

BoD Vice Chairman, John Sheridan participated in the SEB conference call as the Du Jour or visiting Director in August.

SEB member Rick Myers from Howell, MI has taken the staff position in Region Development beginning September 2.

NATIONALS

Reminder: The SEB Town hall is Monday September 15 from 3:30 to 5:00 and the BoD Town Hall is on Tuesday, September 16 approximately one half hour after competition. Both events are scheduled to be held at the Liebler Pavilion at HPT. SEB Chair, Tina Reeves will be attending the BoD Town Hall.

Howard Duncan will be reporting on site options for the Nationals in 2009 and beyond. Local Topeka business community members may contribute toward the HPT track rental fee to encourage the event to stay in Topeka.

TIRE RACK NATIONAL TOUR and CHAMPIONSHIPS
Howard Duncan presented some draft ideas for the structure of Divisional, National and other Championship tour events. Comments from the SEB were favourable. Talk was that events such as these develop a more cohesive national sport.

MEMBER SERVICE/SATISFACTION
Permanent waivers are coming as are hard cards. Results of the latest member survey on Nationals were discussed. Track surface was number one priority followed by a central location and keeping the event together as opposed to two event locations such as an east/west. Surveyed were participants since 2006, about 75% responding, approximately 3000 members.

SEB STRUCTURE

The current year provides us with an excellent window of opportunity to consider the SEB restructure as we will potentially be losing several of the current SEB as they step down. Departing SEB members will be Ron Bauer, Chris Dorsey, Jason Isley and Rick Myers. This is part of the motivation for proposing the SEB reorganization at this time though the idea has been in the works since last year. The concept for a new SEB structure is in our briefing book. As this would require both an Ops manual and SEB rules change, the SEB hopes to get a general go-ahead from the Board for a buy-in on the concept before spending the time to develop the plan's specifics.

COMMITTEE REPORTS

Committee chairmen were notified that the SEB needs the final review of the 2009 rules in by October 15th.

Discussion of Fastrack proposals out for member input causing confusion as some members take these for the final proposal. The SEB is interested in increasing the transparency of the rule making process. The rules making process flow chart will be published again and these issues will be addressed at the Town Hall.

Tina Reeves comments to the BoD, "I guess I would tell the BoD that some members are prematurely stressed about the proposals we have been publishing. We do however appreciate the input. Let them know we expect to hear the disapproval of the members, it helps us to design better rules for them."

SAFETY

Efforts to develop a direct communication path to solo chairs, publication of articles in both The Safety Belt and SportsCar were talked about as ways to heighten awareness of safety issues for finish line designs.

TIME TRIALS ADMINISTRATIVE COUNCIL LIAISON - Lisa Noble

Director Howard Allen participated in the TTAC conference call as the Du Jour or visiting Director in August.

TTAC has approval from Club Racing VP Terry Ozment to proceed with planning a PDX during the 2009 National Convention in Las Vegas. This would be similar to events we have had in the past such as the Phoenix Convention's Bondurant sessions.

They will also be participating in a Convention seminar about how to mix and match Club racing events. This will focus on helping Regions hold several events in a weekend.

OLD BUSINESS

MOTION: As reflected in the results of the SCCA tire test, to change GCR section 9.1.8.6.c.1 to read "All cars shall use the Hoosier SM6 (205/50R15)." Effective November 1, 2008. And to authorize staff to negotiate a contract between SCCA Inc. and Hoosier tire. (Christian/Noble) FAILED, Abstaining, Sauce, Noble, Lybarger. Not voting, Jones

MOTION: To change GCR section 9.1.8.6.c.1 to read "All cars shall use the Toyo R888 (205/50R15)". Effective November 1, 2008. And to authorize staff to negotiate a contract between SCCA Inc. and Toyo tire. (Gordy/Creighton) FAILED, Voting NO, Christian, Introne, Allen, Dent, Lybarger. Abstaining, Noble, Sauce, Not voting, Jones

MOTION: To change GCR section 9.1.8.6.c.1 to read "All cars shall use either the Toyo R888 (205/50R15) or the Hoosier SM6 (205/50R15)". Effective November 1, 2008. And to authorize staff to negotiate a contracts between SCCA Inc. and Toyo tire and Hoosier Tire. (Introne/Lybarger) FAILED, Voting NO, Gordy, Porterfield, Allen, Dent, Creighton. Abstaining, Wannarka, Sauce. Not voting, Jones

MOTION: To change GCR section 9.1.8.6.c.1 to read "All cars shall use the Toyo R888 (205/50R15)". Effective November 1, 2008. And to authorize staff to negotiate a contract between SCCA Inc. and Toyo tire. (Gordy/Creighton) PASSED, Voting NO, Christian, Introne, Allen. Abstaining, Noble, Sauce, Lybarger. Not voting, Jones

NEW BUSINESS

MOTION: To accept the 2009 Solo Rules changes as submitted by the Solo Events Board.(Noble/Introne) PASSED, Unanimous

GENERAL

ITEM 1) Add a new subsection of 1.3.2:
"Course workers must be standing at all times when any competition cars are on-course during the event."
SCCA Fastrack News March 2008

ITEM 2) Move 2.2.O to 1.3.2 and change the first sentence:
"Cell phones, video cameras, and still cameras are not permitted at course worker positions or other locations within the course area..."

SCCA Fastrack News March 2008

ITEM 3) Change 3.7.H:
"For National championship, National Tour, and Divisional competition, current official SCCA required decals must be displayed on each side of the vehicle in a prominent location. For Divisional, Tour, and National Championship events, one official SCCA-approved National sponsor identification logo must be displayed in an upright position, in a prominent location on each side of the vehicle. Further information is contained in Appendix F."

SCCA Fastrack News October 2007

ITEM 4) Change the first part of Section 4.9:
"If in *three (3)* consecutive years..."

SCCA Fastrack News March 2008

ITEM 5) Replace the first sentence of 12.9:
"The area of a wing element shall be computed by multiplying *the maximum chord (straight line distance from leading edge to trailing edge) by the maximum span (width). Curvature of the element (camber) and angle of attack when mounted on the vehicle will not affect the area measurement. The area for multiple-element wings will be the sum of the individual areas of each of the elements."*

SCCA Fastrack News May 2008

SAFETY

ITEM 6) Replace the contents of Appendix E subsection V.E:
"Effective 1/1/09, following an initial one-year licensing as a SSS, the SCCA Licensing Department shall issue a renewal application every three (3) years, pending completion of the appropriate number of events and continuing education as a Solo Safety Steward. All requests for such renewals shall be made by submitting a renewal application with the appropriate number of events and the continuing education class date recorded in the application. During each three-year licensing period, the SSS must participate in one (1) continuing education seminar and serve as a SSS at five (5) events. The DSS shall be responsible for confirmation of participation in the continuing education process. The renewal date is the same as membership renewal."

SCCA Fastrack News July and August 2008

STOCK CATEGORY

ITEM 7) Add to 13.9:
"Additional battery hold-down hardware may be added. It may serve no other purpose."

SCCA Fastrack News January, March, July, and August 2008

ITEM 8) Move from exclusion to SS:
Lotus Elise SC
Dodge Viper (08+)
Lotus Exige S
Porsche 996 Turbo
Move from DS to BS:
Acura Integra Type R
Move from DS to GS:
Chevrolet Cobalt SS Supercharged
Chevrolet Cobalt SS Turbocharged
Mazdaspeed 3
Move from GS to HS:
Honda Civic del Sol VTEC

SCCA Fastrack News July 2008

ITEM 9) Move from DS to GS as a group:
"Audi TT FWD
Dodge SRT-4
Dodge Caliber SRT-4
Dodge Daytona IROC R/T
Honda Prelude (97+)
Mazdaspeed Protégé
Mitsubishi Eclipse (06+)
Nissan Maxima (04+)
Oldsmobile Calais W41
Saturn Ion Redline
Volvo S60R
Volvo V70R"

SCCA Fastrack News July 2008

STREET TOURING CATEGORY

ITEM 10) Remove 14.1.B, the allowance for removal of non-optional A/C components.

SCCA Fastrack News August 2007

ITEM 11) Change 14.2.F:
"Surface area of all splitters, spoilers, and rear wing (see section 12.9) shall not exceed 5 square feet in sum total."

SCCA Fastrack News June 2008

ITEM 12) Replace Section 14.6.A:
"Cross-drilled and/or slotted brake rotors may be fitted (same size/type/material as standard) provided all such voids are within the disc area, and comprise no more than 10% of that area."

SCCA Fastrack News June, July, and August 2008

ITEM 13) In 14.12.3, remove the word:
"…single…"
Note: This will allow any forced-induction configuration.

SCCA Fastrack News March 2008

Change the last portion:
"…forced induction (turbocharged or supercharged)."

SCCA Fastrack News August 2008

ITEM 14) Change 14.12.4:
"Rims (wheels):
2WD (FWD or RWD):
Width – 9" maximum
Diameter and offset – unrestricted

AWD:

Width – 8”

Diameter and offset – unrestricted

Tires:

2WD (FWD or RWD):

Width – 265 mm maximum

AWD:

Width – 245 mm maximum”

SCCA Fastrack News March and August 2008

ITEM 15) Replace Section 14.12.7:

“Non-standard brake rotors may be used provided they are of equal or larger dimensions (diameter and thickness) and made of ferrous material (e.g. iron). Aluminum rotor hats are allowed. Cars originally equipped with solid (non-vented) rotors may utilize vented rotors. Cross-drilled and/or slotted brake rotors may be fitted provided all such voids are within the disc area, and comprise no more than 10% of that area. Brake calipers and mounting brackets may be replaced provided they bolt to the standard locations and the number of pistons is equal to or greater than standard. Drum brakes may be replaced with disc brakes of a diameter equal to or greater than the inside diameter of the standard drum. Such conversions must be bolted, not welded to the axle/trailing arm/upright. Changes to backing plates/dust shields/brake lines to accommodate these changes are permitted but may serve no other purpose.”

SCCA Fastrack News June, July, and August 2008

ITEM 16) In 14.12.9, remove from the list of excluded cars:

Mazda RX-8

SCCA Fastrack News August 2008

ITEM 17) In 14.13, change second sentence to read:

“…and the maximum tire width is increased to *285* mm for FWD or RWD vehicles…”

SCCA Fastrack News August 2008

ITEM 18) Add from exclusion to class STU:

“BMW M3 (E46)”

SCCA Fastrack News March and August 2008

<u>STREET PREPARED CATEGORY</u>

ITEM 19) Replace 15.2.F with:

“The driver and front passenger seats may be replaced, with the following restrictions: *Seats must be securely mounted per 3.3.3.B.2.* The seating surface must be fully upholstered. *Any replacement seat must be a full back, bucket type automobile seat incorporating a functional headrest. Kart seats & low back dune buggy seats and other similar types of seat are expressly prohibited.* Cars may have no fewer than the standard number of seats. The seat tracks are considered part of the seat and may be substituted. Alternate seat tracks may serve no other purpose. The standard seat belts may be removed to facilitate the installation of alternate restraints complying with safety requirements.”

SCCA Fastrack News July 2008

ITEM 20) Change 15.2.H to read:

“Airbags may be electronically disabled but not removed.”

SCCA Fastrack News June 2008

ITEM 21) Replace 15.6 BRAKES with the following:

“Vehicles may only exceed the allowances of 13.6 as specified herein.

A. Any brake line, single or dual master cylinder, vacuum brake booster, or brake proportioning valves may be used. This does not allow multiple separate cylinders, but does allow for any single, dual-circuit cylinder.

B. “Safety brakers” and units such as the “Brake Guard System” are permitted.

C. ABS braking systems may be disabled, but not removed; brake boosters may be removed, modified, substituted, or added.

D. Alternate brake rotors are permitted, subject to the following restrictions:

1. Rotors must be ferrous metal *except for standard parts. Aluminum rotor hats are allowed.* Rotor dimensions (diameter and thickness) must be equal to or greater than standard parts. Cars originally equipped with solid (non-vented) rotors may utilize vented rotors.

2. Cross-drilled and/or slotted brake rotors may be used. *Slots/holes are permitted only in the braking area of the rotor. Rotors featuring a drum-type parking brake in the hat area of the rotor may not be drilled or slotted in the parking brake area.*

E. Drum brakes may be replaced with disc brakes. Disc brake rotors for such a conversion must be equal to or greater in diameter than the inside diameter of the standard brake drum. Changes to backing plates/mounting brackets/brake lines to accommodate this change are permitted but may serve no other purpose. Drum-to-disc

brake conversions must be bolted, not welded to the axle/control arm/upright.

F. *Air ducts may be fitted to the brakes, provided that no changes are made in the body/structure for their use. They may serve no other purpose. Backing plates and dirt shields may be modified or removed.*

G. *A functional, redundant emergency (parking) brake must be present.*

H. *Brake calipers may be replaced, provided the number of pistons is equal to or greater than the original number of pistons. Caliper mounting brackets may be replaced to accommodate this change, but may serve no other purpose. Alternate caliper brackets must bolt to the original caliper bracket mounting location(s)."*

SCCA Fastrack News July 2008

ITEM 22) Add new section after 15.10.G:

"Camber kits, also known as camber compensators, may be installed. These kits consist of either adjustable length arms or arm mounts that provide a lateral adjustment to the effective length of a control arm. Alignment outside the factory specifications is allowed. The following restrictions apply:

1) On double/unequal arm (e.g. wishbone, multi-link) suspensions, only the upper arms OR lower arms may be modified or replaced, but not both. Non-integral longitudinal arms that primarily control fore/aft wheel movement (e.g. trailing arm(s) or link(s) of a multi-link suspension) may not be replaced, changed, or modified.

2) On arm-and-strut (MacPherson/Chapman) suspensions, the lower arms may be modified/replaced OR other methods of camber adjustment as allowed by paragraphs 15.8.C, D, or G may be used, but not both.

3) On swing or trailing arm suspensions, the main arms may not be modified or replaced, but lateral locating links/arms may be modified or replaced.

4) The replacement arms or mounts must attach to the original standard mounting points. All bushings must meet the requirements of 15.8.C. Intermediate mounting points (e.g. shock/spring mounts) may not be moved or relocated on the arm, except as incidental to the camber adjustment. The knuckle/bearing housing/spindle assembly cannot be modified or replaced.

Note: Many modern suspension designs known by other names actually function as double A-arm designs. These include the rear suspensions on 88+ Honda Civic/Integra, Neon, E36 BMW, and most 'multi-link' and are covered by 15.8.H.1."

SCCA Fastrack News April 2008

ITEM 23) Change 15.10.J to read:

"Engine mounts may be replaced, but must attach in the factory location(s) without additional modification or changes. Engine position may not be changed. Hydraulic shock type rear engine locators, or bobble struts may be replaced by manufacturer's performance part or aftermarket replacement part. This part must retain factory dimensions and attachment points, including factory design. (*Example:* If factory locator/bobble strut is gas or hydraulic piston type, replacement part must be gas or hydraulic piston type.)"

SCCA Fastrack News April and June 2008

ITEM 24) Insert after 15.10.K:

"Engine cooling radiators may be replaced with alternate parts subject to the following restrictions:

1) Radiator core dimensions (width, height, thickness) must be no smaller than the standard part.

2) Radiator must mount to OE radiator mounts.

3) Fluid capacity /_and dry weight_/ of radiator must be no less than that of the standard part. Alternate radiators may serve no other purpose (e.g. to allow a cold air intake passage)."

SCCA Fastrack News January and February 2008

ITEM 25) Move from ASP to BSP:

"BMW M Coupe, M Roadster, and Z3 (6-cyl)" [on a separate line]

SCCA Fastrack News March 2008

"BMW M3 (E46)
Pontiac Solstice GXP and Saturn Sky Redline"

SCCA Fastrack News June 2008

ITEM 26) Consolidate the last two lines of the C4 Corvette listings in BSP into one which would read:

"Corvette C4 (84-96) all"

SCCA Fastrack News January and June 2008

ITEM 27) Move from CSP to DSP:

"Dodge SRT-4 "

SCCA Fastrack News April and June 2008

ITEM 28) Add to DSP:

"Subaru Legacy/Outback (1998-2004) 6-cyl (all)
Subaru Legacy/Outback (2005-present) 6-cyl (all)"

SCCA Fastrack News July 2008

ITEM 29) Move from DSP to FSP:

"Dodge Neon (2000-05)"

SCCA Fastrack News June 2008

"Ford Escort ZX-2"

SCCA Fastrack News January 2008

"Honda Civic (1999-2000)
Nissan Pulsar, NX2000, Sentra, & SE-R (1991-94) all"

SCCA Fastrack News July 2008

ITEM 30) Move from DSP to FSP on separate line:
"Toyota Corolla GTS AE86 ('85-'87 RWD) "

SCCA Fastrack News January, March, and June 2008

ITEM 31) Add in FSP:
"Toyota Corolla GTS AE92 ('90-'91 FWD)"

SCCA Fastrack News January, March, and June 2008

ITEM 32) Combine SOHC and DOHC models in FSP onto a single line:
"Dodge/Plymouth Neon (1994-99) all"

SCCA Fastrack News July 2008

Change the Ford Escort-related listings in FSP to read:
"Ford Escort GT, Escort, & Tracer ('91-'96)
Ford Escort, Tracer, & ZX2 ('97-'02)
Ford EXP, LN7, Escort, & Lynx ('81-'90)"

SCCA Fastrack News April 2008

STREET MODIFIED CATEGORY

ITEM 33) Add new subsection in 16.1:
"OE side mirrors may be replaced by aftermarket units, provided they mount in the same location, perform the same function as the OE mirrors, and have a reflective surface area greater than 15 sq. in."

SCCA Fastrack News March 2008

ITEM 34) Replace 16.1.I:
"Front hoods, *engine covers*, *trunk lids and hatches not containing glass*, front fenders, *rear fenders not part of chassis structure (unibody)*, front & rear facias, and side skirts may be modified or replaced, and may be attached with removable fasteners. Associated hardware including latches, hinges, and window washer nozzles may be modified, removed, or replaced. This does not permit removal of the remainder of the window washer system. Fenders may be flared as per Street Prepared. Non-metallic fender liners may be modified, replaced, or removed."

SCCA Fastrack News March, April, and July 2008

ITEM 35) Change 16.1.L, first paragraph (same as **ITEM 46** for Appendix A, Prepared Class X, item 1.c, first two paragraphs):
Aerodynamic Aids: Wings may be added, removed, or modified. Non-OE wings may only be attached to the rear deck/hatch area behind the centerline of the rear axle. The total combined surface area of all wings shall not exceed 8 square feet as calculated per section 12.9. The number of wing elements is limited to 2.

SCCA Fastrack News June 2008

ITEM 36) Add to 16.2 and Appendix A:
Cars running tires with a rated width of 275 or less on all four wheels may compete at a minimum weight 200 pounds less than their calculated weight per Appendix A.

SCCA Fastrack News March 2008

ITEM 37) In Appendix A, STREET MODIFIED CATEGORY, change subsection 3:
"These units will be classified on the basis of a piston displacement equivalent to *0.9 liters times the number of rotors* plus the volume determined by…"

SCCA Fastrack News March 2008

ITEM 38) Change Appendix A under SM:
"AWD: 1800 lbs + 300 lbs/liter"
Under SM2:
"AWD: 1600 lbs + 300 lbs/liter"

SCCA Fastrack News March and July 2008

PREPARED CATEGORY

ITEM 39) Add to 17.2.F after the third sentence:

"This requires a sealed firewall between engine and passenger compartment. This rule is for driver's safety. Completely sealing all firewall openings is strongly encouraged, but no gap may be larger than 1/8 inch, except around dynamic devices extending through the firewall (e.g. throttle linkage, transmission linkage or other mechanical devices), they should be sealed to the extent that functioning of the device is not impaired."

SCCA Fastrack News March and July 2008

ITEM 40) Change 17.2.I:

"The driver seat may be replaced with a seat of any origin. All passenger seats may be removed or replaced with seats of any origin. *Driver's seat must remain on the stock side of the car and may not cross the centerline of the car. The seat may be relocated fore/aft by up to 12 inches based on the centerline of the original front and rear mounting points. Rear bulkhead of the driver/passenger compartment may not be removed to relocate seat and driver's seat may not extend rearward past the bulkhead."*

SCCA Fastrack News March and July 2008

ITEM 41) Change 17.2.P.2:

"It is a non-production rear spoiler which is mounted to the rear portion of the rear hatch, deck, or trunk lid. The spoiler may extend no more that 10 inches from the original bodywork in any direction. Alternatively in a hatchback, the spoiler may be mounted to the rear hatch lid at or near the top of the hatch in such a configuration the spoiler may extend not more than *7.5* inches form the original bodywork in any direction. The spoiler may be no wider that the bodywork. *The use of endplates is prohibited*. Spoiler endplates are defined as any vertical (or semi-vertical) surfaces attached in front of the spoiler which have the result of capturing and redistributing air (downforce) along all or any portion of the spoiler. The angle of attack is free. The spoiler may not function as a wing."

SCCA Fastrack News March and July 2008

ITEM 42) Change 17.2.S:

"The hood, *hatchback*, deck lid and fenders may be lightened or replaced by ones of alternate material, provided the shape is similar to the original and does not confuse the identity of the vehicle. *Factory bolt-on fenders can be replaced in their entirety. Cars with non-removable fenders can replace the front fender panels going forward from the foremost door opening and the rear fender panels going rearward from the rearmost door opening. Closed cars must not remove stock material above the horizontal line placed at the lowest point of the driver's door window opening.* The approval of alternate body panels does not authorize the use of belly pans forward of the firewall or aft of the front edge of the rear wheel opening. Ground effect tunnels and/or attempts to gain ground effects are also not authorized. Any such elements incorporated in the otherwise approved components must be removes or disabled."

SCCA Fastrack News July 2008

ITEM 43) Change 17.10.D:

"Any throttle linkage may be used. All throttle linkages shall be equipped with more than one system of positive throttle closure. *Any throttle pedal may be used*."

Change 17.10.K.4:

"Any clutch is permitted. *The linkage between the clutch pedal and the clutch housing/clutch actuating mechanism is unrestricted. A mechanical linkage may be replaced with a hydraulic system. Any clutch pedal may be used*."

SCCA Fastrack News March and July 2008

ITEM 44) Change 17.10.Q:

"Transmission

1. The stock transmission without modification may be used
2. Any *mechanical* shift linkage or mechanism for changing gears may be used, including use of lockout mechanisms. The shift lever opening in the body of the car may be altered to allow the installation of alternate shift linkage.
3. If a modified stock transmission, or a transmission from another source is used:
   a. Any non-sequential manual transmission is allowed. Any automatic sequential transmission employing a torque converter is allowed.
   b. *Hydraulic/electric shifting mechanisms may be modified in automatic sequential transmissions employing a torque converter.*
   c. *Pneumatic, hydraulic, or electronically controlled shifting is not allowed for manual transmissions, except for electrically-controlled overdrive manual transmissions in cars which were originally equipped with them.*
   d. *Gear ratios may be modified.*
   e. *A functional reverse gear is not required.*
   f. *The transmission tunnel/cover may be altered to allow the installation of an alternate transmission and/or driveshaft. Cars originally equipped with a removable transmission tunnel/cover may substitute a tunnel/cover of an alternate material."*

SCCA Fastrack News March and July 2008

ITEM 45) Change Appendix A, Prepared Class X, subsection 1.b to:

"Front hoods, engine covers, *trunk lids*, *hatches*, front fenders, *rear fenders not part of chassis structure (unibody)*, front & rear facias, and side skirts may be modified or replaced, and may be attached with removable fasteners. *Associated hardware including latches, hinges, and window washer nozzles may be modified, removed, or replaced.* Fenders may be flared as per Prepared (17.2.L, 17.2.M), non-metallic fender liners may be modified, replaced, or removed. Body panels may be attached with removable fasteners (e.g. Dzus)."

SCCA Fastrack News March and July 2008

ITEM 46) Change Appendix A, Prepared Class X, item 1.c, first two paragraphs (same as **ITEM 35** for Street Modified 16.1.L):

"Aerodynamic Aids: Wings may be added, removed, or modified. Non-OE wings may only be attached to the rear deck/hatch area behind the centerline of the rear axle. The total combined surface area of all wings shall not exceed 8 square feet as calculated per section 12.9. The number of wing elements is limited to 2."

SCCA Fastrack News June 2008

ITEM 47) In Appendix A, Prepared Class C, change the third through sixth paragraphs:

"US-produced *4-cyl*, 6-cyl, and 8-cyl engines are allowed alternate-stroke crankshafts; crank angles must remain stock. US-produced *4-cyl*, 6-cyl, and 8-cyl engines manufactured by a particular corporation may be interchanged with ones of similar configuration from the same corporation (e.g., a Chevrolet engine would be allowed in a Pontiac or a Ford 351W would be allowed in a Fox chassis Mustang). Corporate engine substitutions include induction systems and thus no weight penalty is incurred for using the OE induction from the substituted engine. Similar configuration is defined as having the same number and arrangement (i.e. Dual Overhead). Displacement changes are allowed. Alternate engines for a particular model must locate the bell housing to the block mounting surface in the same plane as the standard part. Alternate iron or aluminum cylinder heads may be use on US-produced *4-cyl*, 6-cyl, and 8-cyl engines. Any alternate cylinder head(s) used shall be of a conventional design (Siamese intake ports, two valves per cylinder, all valves inline) direct replacement type."

SCCA Fastrack News July 2008

ITEM 48) This list of vehicles and the allowances was developed from limited preparation (Level 2) vehicles listed in the GCR under GP and HP. The goal is make these cars less expensive and easier to prepare, but allow them to be fully competitive with the cars currently in G Prepared.

The following vehicles will be classed in GP effective January 2009 with the vehicle preparation allowances as listed below. The listed allowances supersede the Section 17 rules where applicable.

“Make	Model	Disp. (cc)	Solo GP Min Weight	Wheels	Max Valve Size (I/E)	Induction
Fiat	124 Sport Coupe	1592/1608	1590/1610	13x6.5	1.64/1.43	(1) 40 DCNF w/32mm chokes
Ford	Festiva (78-80)	1598	1600	13x7	1.41/1.24	(1) 40 DCN, (1) 40 DCNF, (1) 40 IDF
	Festiva (88-93)	1324	1325	13x7	1.26/1.10	Fuel Inj or Carb
Honda	Civic Si (84-87)	1488	1490	13x6	1.07/1.30	Fuel Inj or Carb
	Civic 1.5 (88-91)	1493	1495	13x6	1.14/0.98	Fuel Inj
	CRX Si (84- 87)	1488	1490	13x6	1.07/1.30	Fuel Inj or Carb
	CRX 1.5 (88-91)	1493	1495	13x6	1.14/0.98	Fuel Inj
Nissan/ Datsun	210 (79-82)	1397/1488	1400/1490	13x6	1.46/1.18, 1.38/1.18	(1) 40 DCNF, DCN, IDF w/28mm chokes
	PL510	1595	1595	13x7	1.65/1.30	(1) 40 DCN, DCNF w/32mm chokes or (1) 36 DCNVH
Porsche	914-4	1795	1795	15x7	1.61/1.34	Fuel Inj
Renault	Alliance/Encore 1.7 (84-87)	1721	1720	15X7	1.50/1.28	Fuel Inj
Suzuki	Swift GA 1.3 (89-94)	1298	1300	13x7	1.42/1.18	Fuel Inj
Volkswagen	Golf (GTI, GT, GL)	1780	1780	15x7	1.57/1.30	Fuel Inj
	Jetta (85-91)	1780	1780	15x7	1.57/1.30	Fuel Inj
	Rabbit (81-84)	1715	1715	14x7	1.34/1.22	Fuel Inj
	Rabbit GTI 8V (83-84)	1780	1780	15x7	1.57/1.30	Fuel Inj
	Rabbit 1588	1588	1590	13x7	1.34/1.22	(1) 40 DCN, DCNF w/32mm chokes or Fuel Inj
	Scirocco (81-84)	1715	1715	14x7	1.34/1.22	Fuel Inj
	Scirocco 8V (83-88)	1780	1780	14x7	1.57/1.30	Fuel Inj
	Scirocco 1457/1471	1471/1457	1470/1460	13x7	1.34/1.22	(1) 40 DCN, DCNF, IDF w/32mm chokes or Fuel Inj
	Scirocco 1588	1588	1590	13x7	1.34/1.22	(1) 40 DCN, DCNF w/32mm chokes or Fuel Inj.

Make	Model		Max. track F/R
Fiat	124 Sport Coupe	Comp. Ratio limited to 11.0, valve lift to .425"	56.7/55.4
Ford	Festiva(78-80)	Comp. Ratio limited to 11.0, valve lift to .450"	56.0/55.5
	Festiva(88-93)	Comp. Ratio limited to 10.5, valve lift to .450"	60.1/59.5
Honda	Civic/SI (84-87)	Comp. Ratio limited to 11.0, valve lift to .390"	58.8/59.1
	Civic/1.5 (88-91)	Comp. Ratio limited to 11.0, valve lift to .390"	59.8/60.0
	CRX/SI (84-87)	Comp. Ratio limited to 11.0, valve lift to .390"	58.8/59.1
	CRX/1.5 (88-91)	Comp. Ratio limited to 11.0, valve lift to .390"	59.8/60.0
Nissan/ Datsun	210 (79-82)	Comp. Ratio limited to 10.5, valve lift to .450" Alt. Diff assembly H165	56.0/54.7
	PL510	Comp. Ratio limited to 12.0, valve lift to .450"	54.5/54.5
Porsche	914-4	Comp. Ratio limited to 10.5, valve lift to .420" Cyl. barrels of alt. Mat. allowed	56.5/58.2
Renault	Alliance/Encore 1.7 (84-87)	Comp. Ratio limited to 10.5, valve lift to .450"	58.7/56.3
Suzuki	Swift GA 1.3 (89-94)	Comp. Ratio limited to 11.0, valve lift to .450"	58.4/57.4
Volkswagen	Golf (GTI, GT, GL)	Comp. Ratio limited to 11.5, valve lift to .420"	58.8/58.2
	Jetta (85-91)	Comp. Ratio limited to 11.5, valve lift to .420"	58.8/58.2
	Rabbit (81-84)	Comp. Ratio limited to 11.0, valve lift to .450"	58.9/57.2
	Rabbit GTI 8V (83-84)	Comp. Ratio limited to 12.0, valve lift to .420"	58.9/57.2
	Rabbit 1588	Comp. Ratio limited to 11.0, valve lift to .450"	58.9/57.2
	Scirocco (81-84)	Comp. Ratio limited to 11.0, valve lift to .450"	58.9/57.2
	Scirocco 8V (83-88)	Comp. Ratio limited to 12.0, valve lift to .420"	58.9/57.2
	Scirocco 1457/1471	Comp. Ratio limited to 11.0, valve lift to .450" only 1457 may use Fuel Inj	58.9/57.2
	Scirocco 1588	Comp. Ratio limited to 11.0, valve lift to .450"	58.9/57.2

1. Drivetrain Component Modification

A. General

1. Stock and permitted alternate components of the drivetrain can be modified by any mechanical or chemical means. Modification of a drive train component does not permit relocation of that component.
2. No material or mechanical extension can be added to any stock or alternate component unless specifically authorized by these rules. Repairs to a stock or alternate component are permitted provided the repair serves no prohibited function.
3. Stock and permitted alternate components of the drivetrain can have thermal barrier and friction altering coatings applied.

B. Induction System

1. All inducted air must pass through the venturi(s) of the carburetor(s). All single-carbureted cars may fit a permitted optional carburetor. Permitted optional carburetors are:
   a. Weber 32 DGV/DGAV/DGEV
   b. Weber 32/36 DGV/DGAV/DGEV
   c. Weber 32/36 DFV/DFAV/DFEV
   d. Weber 34 DAT/DATR/DATRA/DMTR
   e. Holley-Weber 5200

   The stock or permitted alternate carburetor must not be modified. Carburetor jets needles, metering rods and needle valves are unrestricted. Choke mechanisms, plates, rods, and actuating cables, wires, or hoses can be removed. The number of carburetors must not be changed from stock.
2. Stock or permitted alternate sidedraft carburetor(s) can use an adaptor plate and/or a spacer in addition to any stock spacer, between the carburetor(s) and the intake manifold. Material for the adaptor plate and spacer is unrestricted. No adaptor plate or spacer can serve any purpose other than to space out and/or mate the carburetor(s) to the permitted intake manifold. The adapter or spacer cannot create a plenum or change the carburetor(s) orientation. The maximum thickness for the adapter, spacer, stock spacer or combination of all is 1.25". For the purpose of these rules an isolator is a spacer.
3. Stock or permitted alternate downdraft carburetor(s) can use an adaptor plate and/or a spacer in addition to any stock spacer, between the carburetor(s) and the intake manifold. Material for the adaptor plate and spacer is unrestricted. No adaptor plate or spacer can serve any purpose other than to space out, or mate the carburetor(s) to the permitted intake manifold. The adapter or spacer cannot change the carburetor(s) orientation. Adaptors and spacers can have a bore larger than the throttle bore of the stock or permitted alternate carburetor(s). The maximum thickness for the adapter, spacer, stock spacer or combination of all is 1.25". For the purpose of these rules an isolator is a spacer.
4. Fuel Injection: All inducted air must pass through the throttle body and be subject to control by the throttle butterfly. The stock throttle body casting/housing must be retained. The inside dimensions of the throttle body casting/housing and all dimensions of the throttle butterfly must remain stock. The throttle butterfly shaft must not be relocated. The outside diameter of the portion of the throttle butterfly shaft located in the throttle body bore must be no smaller than stock. The contour of the interface between the throttle butterfly shaft and the butterfly must remain stock. The throttle butterfly and any throttle butterfly to shaft screws/bolts can be attached to the throttle butterfly shaft by any means including welding or brazing. Holes or slots can be created in the throttle butterfly for purposes of idle adjustment only. The number of injectors must remain stock. The mounting position and injection point must be stock. The original type of fuel injec-

tion must be maintained (electronic, mechanical, electro-mechanical). In all other respects the fuel injection system is unrestricted.

5. All carburetors must retain the stock method of fuel distribution. Utilization or modification of a carburetor's components to effect an annular discharge configuration is prohibited.
6. The intake manifold may be port matched on the port mating surface to a depth of no more than one inch. Balance pipes or tubes on all intake manifolds can be plugged or restricted. The intake manifold cannot otherwise be modified.

C. Cylinder head

The Cylinder Head can only be modified as follows:

1. To install an alternate camshaft, and/or adjustable cam gears.
2. To port match on the port mating surface to a depth of no more than one inch.
3. To facilitate the installation of permitted alternate components provided the modification serves no other function.
4. To achieve the maximum specified compression ratio by the machining of the deck surface.
5. To completely plug the holes resulting from the removal of EGR valves and air nozzles. The plugs must serve no other purpose.
6. To completely plug the stock fuel injection ports in the cylinder head, if the stock fuel injection is removed and carburetors are utilized. The plugs must serve no other purpose.
7. To utilize O-rings to replace or supplement a cylinder head gasket.
8. To fit valve seats. Valve seats are unrestricted. Valve seat angles are unrestricted. The valve seat insert can be no taller than one half inch.

D. Camshaft and Valve Gear

1. Camshafts are unrestricted. Any lifters, tappets/cam followers of the same type and diameter as stock are permitted. The interchange of hydraulic and solid lifters is permitted.
2. Camshaft timing chains, gears, belts, and sprockets are unrestricted provided that they are of the same type, and outside diameter as fitted stock. Single row or double row timing chains can be used. Adjustable timing gears are permitted.
3. A timing chain/belt tensioner can be added to an engine where a tensioner is not fitted as stock, provided that it acts upon the portion of the chain/belt that travels from the final cam sprocket/gear to the crankshaft. The timing belt cover can be removed.
4. Any ferrous (including stainless steel) material valves meeting the specified head and stock stem diameter can be used. Any ferrous valve springs of the same type as stock, can be used. Valve retainers, Spring retainers, lash Pads, valve keepers, seals and adjustment shims are unrestricted.
5. Pushrods are unrestricted. Rocker shafts when utilized in the same stock system can be replaced by an alternate shaft, and is unrestricted. Valve rocker arms, cam followers, rocker ratios and rocker/follower ratios must be stock.
6. Valve guide material is unrestricted, but must have stock external dimensions.
7. Where maximum valve lift is specified, valve lift is measured at the valve with zero lash or clearance.

E. Block and Cylinders

1. The block can be re-bored no more than 1.2mm (.0472 in) larger than the maximum dimension given on the specification line for that make, model, and displacement. A cylinder block from any model from the same manufacturer, which is of the same material and dimensionally identical throughout, except for non-critical bosses, is permitted. Oil passages can be re-routed, enlarged, restricted or plugged.
2. Cylinders or cylinder sleeves of any material can be fitted to the block.
3. Crankshaft main bearing caps and main bearing cap bolts are unrestricted.
4. The block can be machined to utilize o-rings to replace or supplement a cylinder head gasket.
5. Crankshaft oil seal(s) are unrestricted.

F. Pistons and Connecting Rods

1. Pistons, pins, clips and/or pin retainers and piston rings are unrestricted. Pistons must be constructed of metal.
2. Stock connecting rods are required, but can be lightened and balanced.
3. Connecting rod bolts and nuts are unrestricted.

G. Crankshaft and Flywheel

1. Stock crankshafts are required. The Crankshaft can be lightened and balanced. Journal diameters can be a maximum undersize of 0.045 from stock diameter.
2. The direction of the crankshaft rotation must remain stock.
3. The use of any external crankshaft vibration dampener is permitted.
4. Any flywheel of stock diameter or larger can be used, provided it attaches to the standard or permitted alternate crankshaft at the stock location. Additional fasteners can be used. The diameter of the flywheel includes the diameter of the starter ring. Cars that are permitted a specific alternate transmission on the specification line can use a flywheel of stock diameter or larger for that alternate transmission.
5. Clutch assemblies, clutch linkage and release bearings are unrestricted. Carbon clutch components are prohibited.

H. Oiling System

1. Any mechanically driven oil pump can be used. Chassis components can be modified to allow installation of the oil pump. Dry sump systems are prohibited.

2. The oil pan/sump, scraper(s), baffle(s), windage tray(s), oil pickup(s), pressure accumulator(s) and oil filter(s) are unrestricted. The filter(s) and pressure accumulator(s) must be securely mounted within the bodywork. Oil lines are unrestricted. Oil Lines can pass through the driver/passenger compartment.
3. Breather vents are unrestricted.
4. No part of the oiling system can be connected to the exhaust system.

I. Exhaust System
1. The exhaust header and exhaust system is unrestricted. Floor pans can be altered only to recess mufflers. No modifications can be made to the bodywork to fit any other part of the exhaust system.

J. Other Engine Components
1. The use of alternate engine components which are normally expendable and considered replacement parts, such as fasteners, gaskets, seals, bearings, water pumps, etc., is permitted. Electrically driven water pumps are prohibited.
2. Bushings can be installed where none are fitted as stock, provided they are concentric, and that the centerline of the bushed part is not changed.
3. The addition of alignment aides, such as dowels, bolts or keys can be added to engine components.
4. Other than the limitations in 9.1.5.E.1.f.2, engine drive pulleys are unrestricted.
5. Engine steady bars are unrestricted.
6. Engine mounts of alternate design and/or material can be used, but there can be no change to the engine's fore, aft or vertical location except as permitted in 9.1.5.E.1.o.6. Engine mounts must attach to the engine in their stock location.

K. Transmission
1. The Transmission is unrestricted, providing that it is fit in the same basic location as stock. Sequential shifting transmissions are prohibited. Pneumatic, hydraulic or electric actuation of the gearshift mechanism is prohibited.
2. All transmissions must have a reverse gear that is operable by the driver from his normal seated position and capable of sustained movement of the car, under its own power, in the reverse direction. A driver-operated device for locking out the reverse gear can be added, provided it does not prevent prompt engagement of reverse in an emergency situation.
3. Shift linkage is unrestricted. The shift linkage opening in the transmission tunnel or tunnel cover can be modified to allow the installation of the alternate shift linkage.
4. The transmission tunnel and tunnel cover can be altered to allow the installation of an alternate transmission and/or drive shaft. Cars equipped with a removable transmission tunnel cover as stock, can substitute the stock transmission tunnel cover with one of an alternate material.
5. There is no weight penalty for the use of a stock transmission utilizing stock case, gear ratios and synchromesh style gear engagement. An alternate transmission that uses stock type, circular, beveled synchronizers, imposes a 2.5% weight penalty. An alternate transmission that uses a gear engagement mechanism different than stock type, circular, beveled synchronizers imposes a 5% weight penalty.

L. Final Drive
1. Drive shaft(s) are unrestricted.
2. Final drive ratio is unrestricted.
3. Internal differential components are unrestricted. Electric control of the differential is prohibited.
4. Substitution of the differential housing is only permitted on front engine/front drive or rear engine/rear drive cars through the use of an alternate transaxle.
5. Axle shafts, bearings, bearing carriers, hubs, and universal joints/CV joints are unrestricted.
6. Transverse engine cars can rotate the engine about the crankshaft centerline to align axle shafts/constant velocity joints. On rear engine/rear drive cars the engine/drivetrain can be relocated vertically upward, to a maximum of one inch, to allow alignment of suspension and driveline components.

2. Suspension and Steering

A. Ride height is unrestricted.

B. Suspension Components
1. Suspension control arms are unrestricted, provided the quantity of these items remains as stock.
2. Suspension bushings, bearings and ball joints are unrestricted.
3. Any anti-roll bar(s) and rear axle traction bar(s), rear axle panhard rod and watts linkage can be added or substituted, provided its/their installation serves no other purpose. The mounts for these devices can be welded or bolted to the car. These devices and their mounts cannot be located in the trunk or driver/passenger compartment unless fitted as stock. Rear axle traction bar(s) used to control axle housing rotation must be solid bar or tube.
4. When a car's anti-roll bar also acts as a suspension locating device, the bar's attachment points and pivot points on the chassis and suspension control arms must remain in the stock location.
5. Bump stops and bracketry are unrestricted.

C. Suspension Mounting Points
1. Cars equipped with a McPherson strut/Chapman strut suspension can adjust camber and caster at the upper strut mounting point. The upper strut mounting point must remain on stock chassis structure. Slotted adjusting plates at the upper mounting point are permitted. The slotted plates must be located on the stock chassis structure. Material can be removed or added to the top of the strut tower to facilitate installation of the slotted adjuster plate, provided it serves no other purpose.

2. All forms of suspension can adjust camber and caster by the use of shims.
3. Rear independent suspension mounting holes can be slotted within the limits of the stock structure for the sole purpose of camber and/or toe adjustment.
4. Suspension cross member/sub frame mounting bushing material is unrestricted.
5. Suspension pickup/pivot axis points can be reinforced but must remain in the stock location.

D. Springs and Shock Absorbers

1. Any springs or torsion bars can be used, provided the quantity and type of these items remains as stock. Springs and torsion bars must be installed in the stock location using the stock system of attachment. The use of tender springs is permitted, provided the tender springs are completely compressed when the car is at static ride height. Static ride height will be determined with the driver seated in the normal driving position.
2. Shock absorbers are unrestricted, provided the quantity and type (i.e. tube, lever) of these items remains as fitted stock. Shock absorbers must be installed in the stock location using the stock system of attachment. The mounting of the remote reservoir of a remote reservoir shock absorber is unrestricted. No shock absorber can be capable of adjustment by the driver while the car is in motion, unless fitted as stock.
3. MacPherson/Chapman struts must be installed in the stock location using the stock system of attachment. Remote reservoir strut dampeners are permitted. The mounting of the remote reservoir of a remote reservoir is unrestricted. No MacPherson/Chapman strut can be capable of adjustment by the driver while the car is in motion, unless fitted as stock.
4. MacPherson/Chapman strut:
   A. MacPherson/Chapman strut suspensions that are a two-piece spindle/bearing carrier and bolt on damper design, can replace the bolt on damper portion of the MacPherson/Chapman strut with any replacement damper.
   B. MacPherson/Chapman strut suspensions that are a one-piece spindle/bearing carrier and strut tube design, can modify the stock strut tube in order to fit a replacement damper, coil spring and perch. The spindle/bearing carrier portion of the strut can be modified in order to fit an alternate strut tube and any replacement damper. One-piece design MacPherson/Chapman strut suspensions can gusset between the tube and spindle/bearing carrier portion of the strut for the sole purpose of strengthening the strut tube.
   C. MacPherson/Chapman strut suspensions that are a one-piece spindle/bearing carrier and strut tube design that also incorporates an integral steering arm must retain the stock steering arm in its stock location.
   D. MacPherson/Chapman struts that are a bearing carrier, cannot modify or replace the bearing carrier under the unrestricted bearing carrier rule in section 9.1.5.E.2.o.5.
5. All types of suspensions can modify the brake caliper mounting portion of the spindle/bearing carrier, if necessary to fit an approved alternate brake caliper.
6. Shackles or spacers/lowering blocks can be used with leaf springs to adjust ride height.
7. Spacers and threaded sleeves with adjustable spring seats can be used with coil springs. Coil-over threaded body shocks/struts are permitted if coil-over shocks/struts were fitted as stock.
8. Bump stops are unrestricted.

E.Steering

1. Steering system components can be reinforced by the addition of material and/or the addition of support to the stock component.
2. Bushings locating or retaining any steering system components can be replaced by bushings of any material. The alternate bushing cannot relocate the component it retains.
3. The outer tie rod end can be replaced by a rod end. The rod end can be coupled to the steering system by a rod or threaded tube of unrestricted origin and material. The tapered hole in the steering arm on the outboard side of the tie rod (rod end) can be drilled or reamed to allow a bolt to be used to retain the rod end to the steering arm. The rod end can be moved up or down by the installation of spacers for the sole purpose of reducing bump steer.
4. The steering column is unrestricted. A collapsible type steering column is strongly recommended. The driver's normal seated position must not be relocated.
5. Cars equipped with power steering as standard equipment can modify, substitute, disable and/or remove the power pump, related hoses and mounting brackets..

3. Brakes

A. Stock calipers must be retained. Cars fitted with integral hat brake rotors can convert to a two piece design hat and brake rotor. The alternate design hat must be made of ferrous or aluminum material. Alternate discs can be used, but must be made of ferrous material. Alternate drums can be used, but must be made of a ferrous or aluminum material. Alternate discs and drums must be the stock diameter, width and design. Brake rotors can not be cross drilled or slotted unless fitted as stock.

B. Cars fitted with rear drum brakes, can convert to rear disc brakes. When converting from rear drum brakes to rear disc brakes:

1. Rear brake rotors can be no larger in diameter than the largest permitted front brake rotor. Rear brake rotors must be solid and made of a ferrous material. Rear brake rotors can not be cross drilled or slotted.
2. Rear brake rotor hats can be made of a ferrous or aluminum material.
3. Rear calipers and mounting brackets are unrestricted but must be made of a ferrous or aluminum material.

The standard and alternate brake listings on a vehicle's specification line, does not prohibit a car that was fitted with rear drum brakes as stock from converting to rear disc brakes under this rule.

C. Dual braking systems are required. Any dual brake master cylinder(s) and pedal assembly can be fitted. Pressure equalizing and proportioning valve devices are unrestricted.
D. Servo assists are unrestricted.
E. Drum brake wheel cylinders are unrestricted.
F. Brake pads and brake linings are unrestricted.
G. Brake lines are unrestricted.
H. The hand brake and its operating mechanism can be removed.
I. Brake Ducting
   1. Brake air ducts can be fitted.
   2. The front brake duct inlet(s) must not extend to the side beyond the centerlines of the front wheels, or forward of the forward most part of the front of the body or front air dam.
   3. Rear brake duct inlet(s) must face forward, they must be located no more than 24" forward of the rear axle centerline and must not extend to the side beyond the centerlines of the rear wheels.
   4. Backing plates and dust shields are unrestricted."

SCCA Fastrack News June 2008

MODIFIED CATEGORY

ITEM 49) Add new subsection A.7.14 to Section 18, Modified Category, Safety Rules:

"An attenuation structure as stated in and mandated by GCR 9.4.5.F. is not required in Solo Modified Category vehicles."

SCCA Fastrack News January 2008

ITEM 50) Incorporate into Section 18, wording from Section 12.9 (in conjunction with the change to 12.9, **ITEM 4**):

"The area of a wing shall be computed by multiplying the width and depth of the wing without regard to the curvature of the wing. Any airfoil shadowed by another airfoil with more than six inches between them will have its own projected area added to the wing area calculation. Any diffuser-type aerodynamic device under the car which is used in downforce generation is not included in the wing area calculation."

Also add:

"Section 12.9 does not apply."

SCCA Fastrack News May 2008

ITEM 51) Replace 18.1.E Aerodynamic Aids:

"1. These classes are restricted downforce classes. No aerodynamic tunnels, wings, or sealing skirts may be added. No bargeboards, ramps, vanes, wickerbills, or other aerodynamic devices are allowed except as specified.
2. The hood, tub, roof, rear fenders, and rear deck are not permitted to be reshaped to achieve downforce. The front of the car may be reshaped to accommodate the construction of spoilers, air dams, and splitters, *and may be widened to rear body width as specified in E.4.c below. Ramps joining the front fender flares to the splitter/spoiler/airdam assembly which are included as part of a SCCA-approved GT-1 front bodywork package are allowed.*
3. *Front Aero*
   a) The standard O.E. or a non-standard front spoiler or air dam may be used. A non-standard front spoiler is not permitted to protrude forward beyond the overall outline of the car as viewed from above, or aft of the forward-most part of the front fender opening, and shall not be mounted more than four inches above the horizontal centerline of the front wheel hubs.
   b) The spoiler may cover the normal grille opening at the front of the car. Cooling duct openings are permitted. If the front radiator is removed or relocated, no aerodynamic use of the unobstructed front radiator pathway may be made. The front spoiler may be attached to the original bodywork, or it may replace the bodywork it would otherwise cover.
   c) The front spoiler may be no wider than the rear bodywork, measured as in E.4.c. below. The front spoiler may not function as a wing, and therefore must be installed such that air does not pass both over and underneath it. This may be accomplished by ensuring that the upper edge of the spoiler is in complete continuity with the bodywork above the spoiler. *New bodywork may be added to close the gaps between the fenders, nose, and spoiler/splitter/airdam assembly on cars with open or irregular front bodywork such as the Model T Ford, MG-TD, Morgan, and Lotus Seven. When these or similar vehicles use a full-width front spoiler, the car's spoiler/airdam is required to be vertical (between 80-100 degrees) for the lower 8" of its extent. The change in top view outline caused by these bodywork changes is allowed.*
   d) *Front splitters are allowed but must be installed parallel to the ground (within +/- 3/16 inches fore to aft). For safety considerations, splitter edges shall be rounded for safety and be a minimum of 1/4" thick. Splitters may not be wider than, nor extend more than 6 inches forward of the top-view outline of the car.*
4. Rear spoilers
   a) If a rear spoiler is used, it shall be mounted to the rear hatch, deck, or trunk lid, *and mount* no further forward than the base of the rear window. *The spoiler extension for the whole spoiler is set by one measurement at the lateral midpoint of the car. At that point,* the spoiler may not extend more than 10 inches from the *attachment point out to the outer or free edge. This sets the maximum height above ground at all other locations on*

the spoiler. The result may be a flat topped rather than contoured spoiler. Alternatively, the spoiler may be mounted at the rear of the roof, or to the rear hatch lid at or near the top of the hatch; in such a configuration the spoiler may extend no more than 4 inches from the original bodywork, measured as described above.

b) The spoiler may not be wider than the rear bodywork, measured as the maximum distance between the outside edges of the wheel well openings or fender flares at axle height.

c) Aerodynamic aids permitted in subsection E shall not function as wings. Therefore, the spoiler may not overhang the bodywork such that air passes both over and underneath it. If the rear spoiler overhangs the side of the car, the lower edge of the spoiler shall be supported by bodywork that will prevent air from passing underneath the spoiler. This may be accomplished by extending the spoiler to join the bodywork or wheel opening/fender flare beneath the overhang.

5. Diffusers are allowed at the rear of the car only and shall have no more than 25 inches front to back of expanding chamber. Vanes or strakes are allowed inside the diffuser. A diffuser is defined as an expanding chamber between the vehicle and the ground for the purpose of accelerating air ahead of it to develop low pressure. *The diffuser may protrude rearward beyond the top view outline of the car.* Closed undersides or belly pans (lower surface) are permitted. The entire length of the underbody may be closed off to permit proper airflow to a rear diffuser or to smooth the underside of the car. The belly pan shall *be flat within* 1 inch total deviation. *No tunnels or other underbody aerodynamic features are permitted. Chassis rake is free.* Additionally, no side skirt or body side, etc., may extend more than 1 cm below this lower surface anywhere on the car to the rear of the front axle unless specifically permitted by these rules. Diffuser sideplates and strakes may extend below the diffuser surface as long they do not attain a definite seal with the ground on level ground.
6. If the factory production car was supplied with tunnels or wings, they may remain, but they must be blocked in a safe manner to prevent them from functioning to provide downforce. For example, foam or sheet metal may be firmly attached in tunnels or on wings to ruin their shape or to stop airflow.
7. The use of front and rear spoiler endplates is allowed. *Allowed area for each endplate is 100 sq in for rear trunk spoiler, 16 sq in for roof spoiler, and 36 sq in for front spoiler/splitter assembly.* The spoiler angle of attack is free."

SCCA Fastrack News July 2008

KART CATEGORY

ITEM 52) Change 19.1.D.1.f.2 to "20 lbs" instead of 30 lbs for non-OE ignition.

SCCA Fastrack News March and June 2008

Change 19.1.D.2 to "Add 35 lbs" for ICC motors.

SCCA Fastrack News March 2008

SOLO TRIALS

ITEM 53) Appendix D (Solo Trials rule change package)

Section II – Concept

Add new 1st and 2nd sentences:

> "The Solo Trials Rules specified within this Appendix are an extension of the Solo Rules. They are exception or additions to those rules and as such, if a subject matter is not specific herein, the Solo Rules governing that matter shall also govern a Solo Trials event."

Section III – Procedure for SCCA Sanction

Eliminate "numbers"; change 1st sentence of current #1:

> "Submit to the National Office an event site approval and request for sanction which includes…"

Add:

> "All new sites are required to have an inspection to determine suitability for this program. Prior approved sites do not need any subsequent inspections as long as there have been no changes to the surface or other safety-related criteria has changed since the initial inspection. Sanction will be ranted after successful completion of course site inspection."

Delete paragraph #2.

Section VI – Event Officials

Change 1st and 2nd sentences:

"The Chief Steward and Safety Steward shall be appointed by the Solo Chairman of the host Region but may be subject to review by the DSS and/or the DSSS if there is a need. All other officials may be appointed by the host Region without review."

Section X – Vehicle Safety Equipment Requirements

Change X.b:

"All drivers in SCCA-sanctioned Solo Trials events in which a roll bar or roll cage is installed shall utilize either a five-, six-, or seven-point restraint harness meeting the following specifications. A 7-point restraint harness is recommended. Arm restraints are required on all open cars including open targa-tops, sunroofs, and T-tops. The restraint system installation is subject to approval by the Chief Technical and Safety Inspector.

A. A 5-point system for use in automobiles where the driver is seated in an upright position consists of:
   1. A 3-inch seat belt or an FIA or SFI 16.5 certified 2-inch seat belt.
   2. An approximately 3-inch shoulder harnesses or FIA or SFI 16.5 certified 2-inch shoulder harnesses only if the HANS Device is used by the driver. Should the driver at anytime not utilize the HANS Device, 3-inch shoulder harnesses are required.
   3. An approximately 2-inch anti-submarine strap.

A 5-point harness is considered a minimum restraint system. 6- or 7-point systems are highly recommended in all cars including automobiles where the driver is seated in an upright position.

B. A 6- or 7-point system recommended for use in all automobiles consists of:
   1. A 3-inch seat belt or an FIA or SFI certified 2-inch seat belt.
   2. An approximately 3-inch shoulder harness or FIA or SFI 16.5 certified 2-inch shoulder harness only if the HANS Device is used by the driver. Should the driver at anytime not utilize the HANS Device, 3-inch harnesses are required.
   3. 2 or 3 approximately 2-inch leg or anti-submarine straps.

C. The shoulder harnesses shall be the over-the-shoulder type. There shall be a single release common to the seat belt and shoulder harnesses. When mounting belts and harnesses, it is recommended that they be kept as short as reasonably possible to minimize stretch when loaded in an accident. The shoulder harness shall be mounted behind the driver and supported above a line drawn downward from the shoulder point at an angle of 20 degrees with the horizontal. The seat itself or anything added only to the seat shall not be considered a suitable guide. Guides must be a part of the roll bar/cage or part of the car structure. Only separate shoulder straps are permitted (Y-type shoulder straps are not allowed). H-type configuration is allowed.

D. The single anti-submarine strap of the 5-point system shall be attached to the floor structure and have a metal-to-metal connection with the single release common to the seat belt and shoulder harnesses.

E. The double lag straps of the 6- or 7-point system may be attached to the floor as above for the 5-point system or be attached to the seat belt so that the driver sits on them, passing up between his/her legs and attaching either to the single release common to the seat belt and shoulder harnesses or attaching to the shoulder harness straps. It is also permissible for the let straps to be secured at a point common to the seat belt attachment to the structure, passing under the driver and up between his/her legs to the seat belt release or shoulder harness straps. All straps shall be free to run through intermediate loops or clamps/buckles.

F. Each seat belt and shoulder strap of the harness (5-, 6-, or 7-point) shall have an individual mounting point (i.e., 2 for each seat belt and 2 for each shoulder strap minimum). 6- or 7-point system anti-submarine straps may share a mounting point with one or both seat belts. The minimum acceptable bolts used in the mounting of all belts and harnesses are SAE Grade 5. Where possible, seat belts, shoulder harnesses, and anti-submarine straps should be mounted to the roll structure or frame of the car. Where this is not possible, large diameter mounting washers or equivalent should be used to spread the load. Bolting through aluminum floor panels, etc., is not acceptable.

G. Unless specifically mentioned herein, compliance with all driver restraint systems that comply with SFI 16.1, SFI 16.5, or FIA 8853/98 is highly recommended.

H. Harness threading must be assembled in accordance with the manufacturer's instructions. Tech Inspectors are cautioned to inspect all belts and harnesses for wear, looking for abrasions, rips, tears, or other issues which would make a belt/harness of questionable value for its intended purpose. Vehicles with such issues will be prohibited from these events."

Change X.3.c:

"A hand-held fire extinguisher adhering to the following standards is highly recommended.

1. Halon 1301 or 1211; 2-pound minimum capacity by weight.
2. Dry chemical; 2-pound minimum with a positive indicator showing charge. Chemical: 10BC UL rated – potassium bicarbonate (Purple K) recommended; 1A-10BC UL rated multipurpose – ammonium phosphate and barium sulfate or Monnex.
3. The fire extinguisher shall be securely mounted in the cockpit. All mounting brackets shall be metal and of the quick-release type."

Change X.4:

> "125cc shifter karts are permitted with the appropriate driver safety gear as specified in the Solo Rules. However, depending upon surface irregularities of the site, the DSSS may prohibit these karts. Junior karts are not permitted."
>
> *SCCA Fastrack News August 2008*

Proposals under consideration – STOCK

ITEM A) The proposals submitted for member input to move current exclusion list cars to SS for 2009 (see the July Fastrack) will be further considered in light of this year's National Championship results. The intent is to place those cars into SS should results show that the class has become faster due to an existing SS car rising to class dominance. Introducing the new cars would help to maintain competitive balance.

SCCA Fastrack News August 2008

MOTION: To approve the concept of Solo Events Board restructuring. (Introne/Wannarka) PASSED, Voting NO, Gordy, Sauce, Lybarger, Porterfield, Allen. Not voting, Jones

Concept Proposal - SEB Restructure

- Requesting approval of concept; specific supporting rule changes to come by the December BOD meeting.
- Concept Overview
  - Select SEB members from a national pool of members based on needed skills and experience, rather than by Division.
  - Reduce size of SEB from 9 to 7.
  - Divisional Solo Stewards will serve as the representatives from each of their respective Divisions as members of an Advisory Group to the SEB.
- WHY??
  - Only SCCA program board selected in this manner.
  - Solo is a national activity with a national Solo Community that has ready access to the SEB
  - SEB members have not been serving as representatives of their particular Division, but rather for the benefit of the program as a whole.
  - Solo Rules are written to support the National program with Region option for local needs.
  - Limits pool of candidates to fill vacancies.
  - Limits the use of advisory committees as a training ground for serving on the SEB.
  - Current size can be cumbersome; not always as efficient and effective as possible.
- WHY NOW??
  - 5 vacancies coming up for 2009, so the disruption would be minimized.

MOTION: Effective January 1, 2009, to add a new paragraph to "Reimbursement of expenses" the Directors Handbook, to read Outgoing Director in good standing shall receive reimbursement for reasonable travel expenses, and up to three days per diem, for actual attendance at the next scheduled National Convention. (Lybarger/Noble) PASSED, Abstaining, Porterfield, Dent, Jones

MOTION: To approve the following GCR and Operations Manual changes (Stewards Licenses) as proposed (by the Chairman of the Stewards. (Lybarger/Wannarka) PASSED, Not Voting, Jones

C. Steward

1. Steward-in-training
2. Regional
3. Divisional
4. National
5. Senior

~~2. Divisional~~

~~3. Divisional Chief~~

~~4. National~~

~~5. National/Divisional Chief~~

~~6. National Chief~~

~~7. National Series Chief~~

~~8. Senior~~

Page 22

5.1.3. Minimum Grades of Licenses

At the following events the listed minimum license grades are mandatory:

A. National Championship Events - National License minimum for Chief of Emergency Services, Chief of Flagging and Communications, Chief Registrar, Chief Starter, Chief Timer and Scorer, Chief Scrutineer, Chief of Grid, and Chief of Pit. The Chief Steward shall be a National ~~Series Chief~~ Steward, approved by the Chairman of the Stewards Program.

B. Regional Events - Divisional License minimum for all *the Chiefs of* specialties listed in Section 5.1.3.A. The Chief Steward shall hold a Divisional ~~Chief, National Chief,~~ or *National* ~~Series Chief~~ Steward License.

Page 32

C. Driver Schools - National License minimum for all *Chiefs of specialities* listed in 5.1.3.A, except Timing and Scoring. The Chief Steward shall be a National ~~*Chief or National Series Chief*~~ Steward.

D. For all racing events - The Stewards of the Meeting must include, at a minimum, a Chairman and one other licensed steward in addition to any Stewards-in-Training. *The minimum license grade the Chairman of the Stewards of the Meet for a national race is National Stewards License or higher. The minimum license grade for the Chairman of the Stewards of the Meet for all other events is a Divisional Stewards License or higher.* The Assistant Chief Steward-Safety shall be at least a Divisional Steward.

Page 33

5.1.3. Minimum Grades of Licenses

A. National Championship Events - The Chief Steward shall be a National ~~Series Chief~~ Steward, approved by the Chairman of the Stewards Program.

B. Regional Events - the Chief Steward shall hold a Divisional ~~Chief, National Chief,~~ or National ~~Series Chief~~ Steward License.

C. Driver Schools - The Chief Steward shall be a National ~~Chief~~ Steward.

Page 144

Steward Licensing Proposal

Required Changes to the SCCA Operations Manual

5.3 Chairman of the Stewards

Appointment: The Chairman of the Stewards Program shall be appointed at the August board meeting by the Board of Directors with input from the senior executive in charge of Club Racing. Term begins November 1.

Duties: The Chairman of the Stewards will have authority over and responsibility for the Club Racing Stewards program.

The Chairman of the Stewards shall designate a sufficient number of National ~~Series Chief~~ Stewards for each Division to serve as Chief Stewards of National Races, from nominees of the Executive Stewards for the following calendar year. Designations shall be made no later than ~~October 31~~ November 1st of the year prior.

5.4 Divisional Field Staff

5.4.1. Executive Stewards

Appointment: One per Division, selected by the Area Director(s) for each Division, upon advice from the Chairman of the Steward's Program and final acceptance by the Board of Directors at their November meeting. Term to begin January of the following year.

Duties: Those set forth in the SCCA Club Racing General Competition Rules, and responsible to the Chairman of the Stewards Program as follows:

Maintain close liaison with Chairman of the Stewards Program in the supervision, training and licensing of Stewards within his/her Division, and in the implementation of national level programs.

Maintain a roster of Senior, National, Divisional, Regional and Stewards-In-Training ~~and National Series Chief~~ Stewards in his/her Division.

Page 17

5.4.1. Executive Stewards

Maintain full responsibility for licensing all Stewards in their Division, except National ~~Series~~

~~Chief~~ Stewards.

Nominate a sufficient number of National ~~Chief~~ Stewards in their Division to serve as Chief Stewards of National Races. ~~be National Series Chief Stewards~~. Nominations shall be made no later than September 1st ~~October~~ of the year prior to effective date, and shall be made to the Chairman of the Stewards Program.

Page 18 (Top of Page)

B. CLUB RACING AWARDS

1. Kimberly Cup

FIRST PRESENTED 1954

NOMINATIONS: Submitted by the Club Racing Board.

APPROVED BY: The Club Racing Board at their December meeting.

PRESENTED TO: The most improved driver in SCCA Club Racing during the year.

2. Val D. Scroggie Memorial Award

FIRST PRESENTED 1962

NOMINATIONS: Submitted by SCCA members to the Divisional Medical Directors by November 1.

APPROVED BY: The Medical Advisor by December

PRESENTED TO: An SCCA race physician who has made the greatest contribution to the sport.

3. Martin W. Tanner Trophy

FIRST PRESENTED 1963

NOMINATIONS: Submitted by the Chairman of the Stewards, Stewards of the Meeting, Chief Steward, or the Chief of Specialty to the Club Racing Board by November 1.

APPROVED BY: The Club Racing Board at their December meeting.

PRESENTED TO: The SCCA field corner worker in an Interdivisional, National, or Regional SCCA speed event showing unusual courage under exposure to danger.

4. John McGill Award

FIRST PRESENTED 1975

NOMINATIONS: Submitted by the Divisional Executive Stewards, Regional Executives and Regional Competition Chairmen to the Club Racing Board by October 1.

APPROVED BY: The Vice President of Club Racing and the Club Racing Board at their December meeting.

PRESENTED TO: The SCCA member who has made a significant contribution to the SCCA Club Racing Program.

5. David Morrell Memorial Award

FIRST PRESENTED 1981

NOMINATIONS: Submitted and approved by the National Administrator of Stewards, Chairman of the Stewards Program and the Executive Stewards by December 1.

PRESENTED TO: An active National~~, National Chief Steward or National Series Chief~~ Steward who has exhibited outstanding performance, dedication to the sport, and the highest principles. The purpose of this award is to encourage continued participation in the Steward's Program.

MOTION: To approve the following changes (Track Review) to the Operations Manual as proposed by the Chairman of the Stewards. (Lybarger/ Allen) PASSED, Not Voting, Jones

5.12 Track Review Process

The SCCA Track Review process is coordinated by the Executive Stewards, working with the National Staff designee. The program is comprised of three categories as follows:

- Existing track and/or configurations will be reviewed annually by the Executive Stewards using a check-list provided by the National Office.
- New track and/or configurations will be reviewed by a track reviewer selected from a list approved by the SCCA at the expense of the region and/or track. The reviewer will use a checklist provided by the National Office.
- Previously approved/decommissioned track and/or configurations will be addressed on a case-by-case basis under a. or b. above at the discretion of the National Office.

5.4.1. Executive Stewards

Appointment: One per Division, selected by the Area Director(s) for each Division, upon advice from the Chairman of the Steward's Program and final acceptance by the Board of Directors at their November meeting. Term to begin January 1 of the following year.

Duties: Those set forth in the SCCA Club Racing General Competition Rules, and responsible to the Chairman of the Stewards Program as follows:

- Maintain close liaison with Chairman of the Stewards Program in the supervision, training and licensing of Stewards within his/her Division, and in the implementation of national level programs.
- Maintain a roster of Senior, National, Divisional, Stewards-In-Training and National Series Chief Stewards in his/her Division.
- Monitor the condition of each racing facility in the Division and work with the National Office to coordinate track reviews for the Division, ensure that current disaster plans are on file at the National Office for each facility that an event is conducted on.
- Review and pre-approve Supplemental regulations, race schedules, and entry forms for race sanction requests prior to submission to the Club Racing Department.
- Assign all Stewards and approve other key officials for each National, Regional, Driver's School, or Restricted Event held in the Division in accordance with the GCR.
- Delegate any or all duties of the Executive Steward to Deputy Executive Steward(s).
- Serve as advisory resource for Club Racing Board on GCR operational issues.
- Maintain full responsibility for licensing all Stewards in their Division, except National Series Chief Stewards.
- Nominate a sufficient number of National Chief Stewards in their Division to be National Series Chief Stewards. Nominations shall be made no later than October 1 of the year prior to effective date, and shall be made to the Chairman of the Stewards Program.

MOTION: To approve the following changes to the GCR as proposed by the Club Racing Board. (Wannarka/Christian) PASSED Voting NO on GCR #14 Sauce and Creighton, Abstaining on Formula #8 Noble and Lybarger
GCR item 10, and Formula item 5 were sent back to the CRB for further clarification 5.

GCR

Item 1. Effective 11/1/08: Change section 5.10.3.B.4 as follows:
The driver information shall include: driver's full name, hometown, state, region of record, car number, *and* car make and model, ~~and car year as required per GCR~~. It is required that the competition license number be included in the driver information.

January 8 minutes, published February FasTrack, amended March 4 minutes, published April FasTrack

Item 2. Effective 11/1/08: Delete section 5.5.4.D in its entirety.

~~D. Equipment~~
~~Each corner station should be equipped with at least the following:~~
~~1. Device for communicating immediately, privately, and without interference with the Central Control Station, other corner stations, and other stations as appropriate.~~
~~2. The following flags or signaling paddles: Yellow (2), yellow and red striped, white, blue with a yellow stripe, black, and red.~~
~~3. One dry chemical type fire extinguisher of at least 20 pound size although two (2) 10 pound extinguishers are recommended.~~
~~4. Pry bar of sufficient length (4-5 feet).~~
~~5. Broom (push type).~~
~~6. Oil/gasoline absorbent material.~~
~~7. Blanket or fire sheet.~~
~~8. Vest or arm band to distinguish the Corner Captains.~~
~~9. Pair of Day-Glo orange re-entry gloves.~~
~~10. 20 foot length of half inch rope.~~
~~11. Flame/Heat resistant gloves.~~
~~12. Each black flag station shall additionally be equipped with black and mechanical black flags, plus a blackboard or other means of displaying simultaneously the affected car's number or the word "ALL."~~

January 8 minutes, published February Fastrack

Item 3. Effective 11/1/08: Change section 5.7 as follows:

5.7.1. Sound Control Chief

The Sound Control Chief shall be responsible for monitoring racing vehicles at sound-controlled events in accordance with the GCR ~~and the SCCA Sound Control Manual~~. Specifically, he or she shall:
A. ~~Review or establish~~ *Ensure that the* sound ~~meter~~ monitoring ~~location~~ *equipment is located at an official certified site*.
B. ~~Establish how~~ *Ensure that* reading~~(s)~~ shall be made *in accordance with the GCR*.
C. Advise the Chief Steward of the readings.
D. Submit post-race reports to the Chairman of the SOM.
E. Monitor weather and ambient conditions throughout the day.
F. Perform field calibration *of the equipment* in accordance with the GCR ~~Sound Control Manual for sound meter, microphone, or other instruments~~.
G. ~~Obtain~~ *Ensure that* yearly calibration of *the* equipment *has been performed by the* ~~from~~ manufacturer or ~~qualified~~ *a certified* laboratory.
5.7.2 General Procedures and Requirements
~~This Section shall establish SCCA test procedures, instrumentation, and environmental requirements for determination of race vehicle sound emissions.~~
Competitors carry sole responsibility to determine that their vehicles comply with Sound Control Regulations at each event. Mufflers may be required.
Sound Control will be in effect for all events. All cars will be monitored and readings will be posted for competitors' information. A driver registering a single sound level reading over ~~103dB~~ *the maximum for the event* shall not be black flagged. If a driver is black flagged due to sound, the car shall not re-enter the course until corrective steps are taken.

5.7.3 Standards
A sound level instrument (meter) that meets American National Standards Institute (ANSI) S1.40-2006 Class 2 or better shall be used.
The primary *maximum* ~~standard~~ for SCCA Sound Control shall be a sound pressure level of 103dB~~b~~ "A" frequency weighted (dBA~~ba~~) measured on the fast response setting at 50 feet (+/- 2 feet) from the edge of the track pavement, and/or artificial markers indicating track edge. *Lower maximum levels may be imposed at specific venues or events. These lower levels shall be noted in the Supplemental Regulations. All sound readings* shall be truncated to the lower whole number. (Anything after the decimal point is ignored.)

Proper location and use of all test instrumentation is essential to obtain valid measurements. Operating manuals or other manufacturer's literature should be referenced for both recommended operation and precautions to be observed.
1. Acoustic calibration procedures should include extension cable influence.
2. Field calibration shall be done at least every four (4) hours while in the operating mode.
3.The microphone shall be 3.5 feet (minimum) above the ground surface, 2.0 feet (minimum) above the level of the roadway, no more than 6 feet above the level of the roadway, and two hundred (200) feet or more away from any tunnel or overpass through which the target vehicle passes. Whenever possible it is recommended (but not mandatory) that the microphone shall be located on the outside of the track between the race car and the outside perimeter of the racing facility, aimed into infield areas.
4. Weather conditions should be recorded every hour when conditions are unstable, or otherwise every two (2) hours. Meteorological instruments to support sound readings include a barometer (capable of reading 0.1 inches of mercury recommended) and a thermometer, accurate to +/- 1 degree Fahrenheit ~~(wet-bulb thermometer recommended)~~.

June 3 minutes, published July Fastrack

Item 4. Effective 11/1/08: Change section 5.9.4.C.2 as follows:
Use at the track of ~~certification~~ *calibration* weights, ~~minimum 250 pounds~~ *totaling 100 pounds up to 250 pounds total as recommended by the scale manufacturer or minimum 250 pounds total if no recommendation is provided by the scale manufacturer* for individual wheel scales*;* ~~and~~ minimum 750 pounds total for platform scales. *Where applicable, the calibration recommendation by the scale manufacturer (e.g., a manual or letter from the manufacturer) must be available at all times during an event where the scales are in use."*

January 8 minutes, published February Fastrack

Item 5. Effective 11/1/08: Change section 5.12.2.C.5 as follows:
At his or her discretion and without necessarily receiving a request to do so, order *(or request the SOMs order)* disassembly and inspection of any entered car to ascertain its conformance with the GCR. If the car is found to be eligible for the competition in which it is entered, the race organizers shall stand the expense of the disassembly, inspection, and reassembly. If it is not eligible, the entrant shall bear the expense, in addition to whatever penalties *the Chief Steward may assess or* the SOM may direct after receiving the Chief Steward's report. *A representative of the race organizers authorized to approve financial expenditures must formally approve the bond established for such a teardown before disassembly may begin. If handled solely as a Chief Steward's Action, the Chief Steward is directly responsible for monitoring all facets of the process until such time as the impounded parts are either retained by SCCA or returned to the competitor, as the Chairman SOM does in the case of a protest or RFA.*

January 8 minutes, published February Fastrack

Item 6. Effective 11/1/08: Change section 7.4.E as follows:
AUTOMATIC PENALTIES
Refusal to permit disassembly (tear down) in a Protest/Request for Action*/Chief Steward's Action* is an automatic penalty of disqualification, six (6) month suspension, and two-hundred-fifty dollars ($250.00) fine.

January 8 minutes, published February Fastrack

Item 7. Effective 11/1/08: Change section 9.2.1.I as follows:
If a car is *protested or inspected during an event and* found to be illegal, the results *of this protest or inspection* shall be noted by the Chairman SOM, or delegated to another official, such as the Chief Scrutineer. (See 8.3.3.)

January 8 minutes, published February Fastrack

Item 8. Effective 11/1/08: Change section 8.3.3.F as follows:
Preservation of Evidence Any recorded evidence such as technical data or inspectors' reports or measurements shall be forwarded to the Club Office with the tear down bond (See 8.3.3.A.). The Chairman SOM *(or Chief Steward, in the case of a Chief Steward's action)* shall accept any parts tendered by the owner for safekeeping pending appeal. The SOM *(or Chief Steward, in the case of a Chief Steward's action)* shall have the authority to impound parts. *All impounded parts will be uniquely and identifiably marked upon their removal from the car and will remain in the direct control of a licensed Scrutineer or Steward designated by the Chairman SOM or Chief Steward (depending upon the type of action in progress) until such time as they are returned to the competitor or are delivered to and under the direct control of a courier service providing shipment by insurable and traceable means to the National Office for inspection and either retention or subsequent return to the competitor.*

January 8 minutes, published February Fastrack

Item 9. Effective 11/1/08: Add the following to section 6.2.2.J.2:
Note: If a car leaves the course during the pace lap(s), all drivers in the column behind that car shall close up behind the cars in front of them to satisfy 6.2.2.G. Moving up under these circumstances is not considered as improving position or passing under yellow.

February 6-10 minutes, published March Fastrack

Item 10. NOT APPROVED Effective 11/1/08: Change the fuel standard table in section 9.3.25.A and add a new introductory paragraph as follows:
Competitors in all classes except those in the Showroom Stock may choose any fuel that complies with the fuel standards table. Showroom Stock competitors must use a fuel that allows vehicles to remain EPA compliant.

~~Classes~~	Type	DC max	Reagent A
~~All Prepared, FB, FE, SS, SM, T, IT, SRF, and Old SR, and Elan spec DP 02 running as CSR~~	~~Gasoline w/no added oil~~	~~15~~	~~N/A~~
~~All other classes (incl. 2 cycle w/oil injection)~~	~~Gasoline w/no added oil~~	~~0~~	~~No pos.~~
~~All 2-cycle w/o oil injection~~	~~Gasoline w/oil mixture~~	~~2~~	~~No pos.~~
~~All rotary engines~~	Gasoline w/ or w/o oil mixture	15	~~N/A~~

Compounds	*Examples*	*Maximum Percentage By Weight Allowed*
Aldehydes	*Acetaldehyde, Acrolein, Formaldehyde*	*1.0*
Benzene		*2.0*
Cyclic ethers	*1,4 Dioxane, Furan, Tetrahydrofuran*	*0.05*
Dienes(Diolefins)	*1,3 Butadiene, Isoprene*	*1.0*
Ethanol		*10.0*
Epoxides	*Ethylene oxide, Propylene oxide*	*0.05*
Methanol		*1.0*
Metals	*Manganese, Boron and Chromium*	*0.05 gm/gal*
Lead	*TML, TEL*	*5.0 gm/gal*
Organic Nitrogen Compounds	*Nitromethane, Nitroethane. Nitropropane, and all aromatic nitrogen compounds such as Nitrobenzene*	*0.05*
Basic Nitrogen Compounds	*Ammonia, Amines and their salts, Aniline, Hydrazine, Pyridine, Pyrrole, Benzidine*	*0.05*
Styrene		*1.0*
Sulfur Compounds	*Dimethylsulfoxide, Thiophene*	*0.05*

February 6-10 minutes, published March Fastrack

Item 11. Effective 11/1/08: Change section 9.3.25.B Fuel Sample Acquisition as follows:

~~All cars shall be equipped with an easily accessible sampling valve/port located between the fuel tank and the carburetor(s) or fuel injectors to facilitate acquisition of fuel samples. To avoid fuel spillage, the fuel sampling valve/port shall not consist of removing a fuel line from any fuel system component unless a dry break fitting has been installed. A capped and/or sealed "T" may be fitted inline, or a capped and/or sealed auxiliary sample port may be fitted to a fuel system component (carburetor, fuel rail, etc.) without using a dry break fitting. Under no circumstances is siphoning of fuel from the fuel tank/ cell acceptable.~~
~~If possible, the sampling valve/port should not be located in the engine compartment. Cars equipped with a factory fuel pressure test port (e.g. fuel injected SS, T, IT, SRF, etc.) or competitors having factory fuel pressure test equipment available, are not required to have an additional fuel sampling port. On all other cars, to avoid fuel spillage it is recommended that a valve or dry break fitting be installed in the fuel line. In all cases competitors shall provide the appropriate tooling necessary to safely obtain the fuel sample. A manned fire extinguisher shall be present whenever fuel samples are being acquired.~~

All cars shall be equipped with an accessible sampling port/valve/device located in a fuel line between the fuel tank or fuel cell and the carburetors or fuel injection system or in an unused carburetor port to allow safe acquisition of a fuel sample. If possible, the port/valve/device should be located outside the engine compartment. The sampling port/valve/device will be installed and used by the competitor to obtain the sample without fuel leaking, spraying or squirting. Siphoning of fuel directly from the fuel tank or fuel cell or removing a hose or line is not allowed.

Competitors whose cars are equipped with a factory fuel pressure test port or who have factory fuel pressure test equipment available are not required to have an additional fuel sampling port, providing the test port is accessible and the competitor obtains the sample without fuel leaking, spraying or squirting.
Competitors will provide all the necessary and appropriate tools to obtain a fuel sample.
A tech observer and manned fire extinguisher will be at the car at the time the sample is taken and the competitor will name the fuel brand and type for notation on the sample bottle label.

February 6-10 minutes, published March FasTrack, amended April 1 minutes, May FasTrack

Item 12. Effective 11/1/08: Change section 9.4.D as follows:
Two side tubes connecting the front and ~~rear~~ *main* hoops across both door openings are mandatory. NASCAR-style side protection or one bar bisecting another to form an "X" is permitted. Door side tubes may extend into the *front* door…

February 6-10 minutes, published March Fastrack

Item 13. Effective 11/1/08, change section 9.3.41 to read as follows:
Steering wheel lock devices shall be removed *or disabled* (except Showroom Stock and Touring).

Delete section 9.1.3.D.10.a in its entirety and reletter subsequent sections:
~~Steering lock mechanisms shall be removed.~~

Delete the last sentence of section 9.1.4.L.14 as follows:
~~Steering lock mechanism must be removed.~~

Change section 9.1.6.D.9.b to read as follows:
~~Steering lock mechanisms and a~~ *A*irbags / passive restraint systems shall be removed.

Change section 9.1.7.D.9 to read as follows:
Steering lock mechanisms may be removed *or disabled.*

Delete section 9.1.8.C.9.a in its entirety and reletter subsequent sections:
~~Steering lock mechanisms shall be removed. See GCR section 9.3.41.~~

Change section 9.1.10.D.10.a to read as follows:
Steering column locks may be removed *or disabled.*

March 4 minutes, published April Fastrack

Item 14. Effective 11/1/08: Add subsection C and D to section 3.1.2 as follows:

C. The practice sessions for both Nationals may be combined into a single session.
D. Time for the combined practice and qualifying session must be a minimum of 70 minutes

April 26-27 & May 6 minutes, published June Fastrack

Item 15. Effective 11/1/08, change section 9.3.19.A as follows:
Driving suits that effectively cover the body from the neck to the ankles and wrists. One piece suits are highly recommended. All suits shall bear an SFI 3.2A/1 or higher certification label or FIA *8856-1986 or* 8856-2000 homologation. Underwear of fire resistant material shall be used except with suits carrying FIA standard *8856-1986 or* 8856-2000 or SFI 3-2A/5 or higher (e.g., /10, /15, /20) Certification Patch.

April 26-27 & May 6 minutes, published June Fastrack

Item 16. Effective 11/1/08, change section 9.4.F.5 as follows:

Either an inspection hold between 3/16 and 1/4 inch diameter must be drilled in a non-critical area of the front and rear hoops, as well as one of the supplemental braces to facilitate verification of wall thickness*; or alternatively, wall thickness may be determined by non-invasive means and noted in the log book as inspected by such means.*

Change section 9.4.5.E.4.d as follows:
Either an inspection hole at least 3/16 inch diameter, but no greater than 1/4 inch diameter shall be drilled in a non-critical area of the front and rear hoop as well as one of the supplemental braces to facilitate verification of wall thickness*; or alternatively, wall thickness may be determined by non-invasive means and noted in the log book as inspected by such means.*. Formula Cars and Sports Racers with alternate roll structures are not required to have inspection holes, the wall thickness will be indicated on the back of the homologation certificate.

April 26-27 & May 6 minutes, published June Fastrack

Item 17. Effective 11/1/08: Change recommended item 3 as published in the February Fastrack with 5.7.3 as follows (5.7.1 and 5.7.2 remain as published in the February Fastrack):

Moved to and included in item 3

Item 17. Item 2. Effective 11/1/08: Change section 3.7.2 as follows:
The organizing region will send Official Race Results to the National Office Results *(printed or photocopied or via email)* within five (5) days of the event. Additionally, for national races, the organizing region will send one (1) copy *(printed or photocopied or via email)* to the appropriate Divisional Pointskeeper (including qualifying) within five (5) days of the event. Additionally, the organizers shall provide Official Race Results (printed or photocopied) for each entrant ~~either~~ during the event, or shall either mail photocopied results at the organizer's expense *or e-mail results (at the entrant's option)*, within seven (7) days after the conclusion of the event.

June 3 minutes, published July Fastrack

Item 18. Effective 11/1/08: Change section 6.7.4.B as follows:
If the checkered flag is not displayed at the scheduled end of the race (in other words, if a race is one or more laps longer than scheduled), the race shall be scored as if it had ended at the scheduled length*. If the starter becomes aware that one or more cars have passed the finish line after the scheduled end of the race, the starter, with the concurrence of Timing and Scoring and the Operating Steward, may show the checkered flag immediately.*

June 3 minutes, published July Fastrack

Item 19. Effective 11/1/08: Change section 8.4.8 as follows:
For all National Races held less than ~~31~~ *28* days prior to the commencement of the Runoffs,

August 5 minutes, published September Fastrack

Item 20. Effective 11/1/08: Change section 5.9.2.A and B as follows:

A. Annual Inspection

A full and complete Technical and Safety Inspection shall be performed by a Licensed Scrutineer (Divisional/National) on each car once a year (12 months). If the car passes Annual Technical Inspection, the tech inspector shall enter the date of the safety harness expiration in the logbook, the logbook shall be stamped with the "official" inspection stamp, dated, and signed.
~~Driver Safety Equipment shall comply with Section 9.3.19., Driver's Safety Equipment. The scrutineer performing the inspection shall affix a dated, non removable sticker or decal to helmets that comply with Section 9.3.19.B.. This sticker or decal and the other drivers' safety equipment which must be worn may be checked by Grid or Scrutineering personnel on the starting grid.~~ *Driver's safety equipment is not required to be inspected at the time of annual inspection for the car.*

B. Minimum Event Safety Inspection/Tech Sticker

Minimum Safety Inspection—Minimum inspection for each event thereafter shall consist of reviewing the Vehicle Logbook. If it is in order, a Tech sticker shall be issued. *Driver's safety equipment is not required to be presented at this inspection.*

The participant agrees that the participant bears the ultimate responsibility at all times to ensure the safety of participant's vehicle~~,~~ *and* equipment, ~~and clothing~~ and compliance with all SCCA rules, regulations, and agreements, including but not limited to those contained in the GCR. Moreover, in the case of technical violations, the participant acknowledges, understands, and agrees that the participant is charged with full knowledge of every component of participant's vehicle and that even if a third party (for example, an engine builder) has caused the participant's vehicle to be noncompliant, the participant will still be responsible for and charged with any applicable violation and penalty.

August 5 minutes, published September Fastrack

Item 21. Effective 11/1/08: Add a sentence to the first paragraph of section 9.3.18 as follows:

Arm restraint clarification

9.3.18. DRIVER'S RESTRAINT SYSTEM

All drivers in SCCA sanctioned speed events shall utilize either a five, six or seven point restraint harness meeting the following specifications. A seven-point restraint harness is recommended. Arm restraints are required on all open cars including open Targa tops, sunroofs and T-tops. *Arm restraints shall not be worn in a manner which limits the ability of the driver to provide visible signals to other competitors while on the track.* The restraint system installation is subject to approval of the Chief Technical and Safety Inspector.

August 5 minutes, published September Fastrack

Item 22. Effective 11/1/08: Add new subsection A and B to section 9.3.19, and renumber items under the newly numbered subsection C as follows:

9.3.19. DRIVER'S SAFETY EQUIPMENT

All required driver's safety equipment must be worn at all times while on the track.

The participant agrees that the participant bears the ultimate responsibility at all times to ensure the safety of participant's driver's safety equipment, and compliance with all SCCA rules, regulations, and agreements, including but not limited to those contained in the GCR.

A. Annual Inspection

At the first event of the calendar year, all driver's safety equipment will be inspected by a licensed scrutineer. The scrutineer performing the inspection shall affix a dated, non-removable sticker or decal the left side of helmets that comply with Section 9.3.19.B., to indicate that all driver's safety equipment has been inspected and is in compliance with this section. This sticker or decal, which shall be placed on the helmet in a manner such that it is visible from outside the car with the driver seated and belted in the normal driving position, may be checked by grid or scrutineering personnel on the starting grid. The presence of other externally visible driver's safety equipment (gloves, balaclava, and suit) may also be checked by grid or gcrutineering personnel on the starting grid.

B. Reinspection

Throughout the racing season, a check of the condition and legality of driver's safety equipment should periodically be done by scrutineers in impound by group or class with the concurrence of the Chief Steward.

C. *Required Equipment*

The following required equipment shall be in good condition and free of defects, holes, cracks, frays, etc.

Note... Approved item 15 inserted as item 1

~~A~~ *1.* Driving suits that effectively cover the body from the neck to the ankles and wrists. One piece suits are highly recommended. All suits shall bear an SFI 3.2A/1 or higher certification label or FIA *8856-1986 or* 8856-2000 homologation. Underwear of fire resistant material shall be used except with suits carrying FIA standard *8856-1986 or* 8856-2000 or SFI 3-2A/5 or higher (e.g., /10, /15, /20) Certification Patch

~~B~~ *2.* Crash helmets approved by the Snell Foundation with Snell sticker 2000 or later Special Application (SA2000), or by the SFI with a SFI Sticker 31.1a for open faced helmets and a SFI sticker 31.2a for closed faced (if purchased prior to 12/31/04), SFI 31.1 (if purchased after 1/1/05), or by the FIA standard 8860-2004. The back of each driver's helmet shall be labeled with a minimum of the driver's name. The use of a head and neck support system is highly recommended. Accident damaged helmets should be sent by the driver or his or her representative to the Snell Memorial Foundation, 3628 Madison Ave., North Highland, CA. 95660 (ph) 916-331-5073 (attn. Edward B. Becker). Details of the accident should be included. Freon based total loss helmet cooling systems are not allowed.

~~C~~ *3.* Gloves made of leather and/or accepted fire resistant material containing no holes.

~~D~~ *4.* Socks made of accepted fire resistant material.

~~E~~ *5.* Face coverings (balaclavas) of accepted fire resistant material for drivers with beards or mustaches. Hair protruding from beneath a driver's helmet shall be completely covered by fire resistant material. As an alternative to balaclavas, a full helmet skirt of accepted fire resistant material may be used. Double-layer balaclavas are recommended. If balaclavas are used voluntarily, they shall be of accepted fire resistant material.

~~F~~ *6.* Goggles or face shields, preferably made of new impact resistant materials, for drivers of open cars.

~~G~~ *7.* A driver's restraint system meeting SCCA standards (See Section 9.3.18.) shall be used at all times while on the track.

~~H~~ *8.* Shoes, with uppers of leather and/or nonflammable material that at a minimum cover the instep. Ventilation pinholes by the manufacturer are allowed.

August 5 minutes, published September Fastrack

Formula

Item 1. (FE) Effective 1/1/09, change the name of Formula SCCA (FE) to Formula Enterprises (FE).

March 4 minutes, published April Fastrack

Item 2. (FC) Effective 11/1/08: Change section 9.1.1.B.4.b as follows:

Pistons, crankshaft, and rods may be replaced only with standard original Ford replacement parts. The crankshaft may ~~not~~ be ground

or polished *for the purpose of installing oversize main or rod bearings* ~~in any way and must have stock dimensioned main and rod bearing journals~~. The rod journals must remain stock and the rods may not be bored or remanufactured in any way. The rod and crankshaft bearings may be replaced only with original *or over*sized Ford bearings. ~~Oversize bearings are not permitted.~~ The required *original* crankshaft main bearing journal dimension is 2.282-2.283 inches and the required *original* crankshaft rod journal dimension is 1.846-1.847 inches. *The corresponding main journal dimensions for oversized bearings are either 2.273-2.274 inches or 2.263-2.264 inches; the corresponding rod journal dimensions for oversized bearings are either 1.837-1.838 inches or 1.827-1.828 inches.*

February 6-10 minutes, published March Fastrack

Item 3. (FC) Effective 11/1/08: Change the third paragraph of section 9.1.1.B.1 as follows:
It is not permitted to construct any suspension member in the form of an *asymmetrical* airfoil or to incorporate a spoiler in the construction of any suspension member. *Symmetrical streamlining of suspension members is permitted.*

April 26-27 & May 6 minutes, published June Fastrack

Item 4. (FV) Effective 11/1/08: Change selected portions of section 9.1.1.C.2 as follows:
Track, rear: ~~*49 13/16 1/8" + 7/8" - 5/8" 50 3/4" maximum*~~ *49.125 " minimum, 50.750" maximum (no spacers allowed)*

February 6-10 minutes, published March Fastrack

Item 5. (FF) SENT BACK TO CRB FOR FURTHER CONSIDERATION

Effective 11/1/08: Remove section 9.1.1.D.2.s.10 and renumber subsequent paragraphs:
~~Exhaust Outlets~~
~~Exhaust outlets on cars registered after January 1,1986 shall not extend more than 60cm (23.60") behind the centerline of the rear axle and shall be positioned between 30mm (11.8") and 60cm (23.6") from the ground, measured to the bottom of the exhaust pipe.~~

December 4 minutes, published January Fastrack

Item 6. (FF) Effective 11/1/08: Change selected portions of section 9.1.1.D.2.e, amended in *Technical Bulletin 08-02*, as follows:
Minimum weight with rings and pin: ~~525~~ *485* grams

April 1 minutes, published May Fastrack

Item 7. (FB) Effective 11/1/08: Add new paragraph J to section 9.1.1.H.4 as follows:

J. The stock chain tensioner may be replaced with any mechanical chain tensioner.

December 4 minutes, published January Fastrack

Item 8. Effective 1/1/09: Add new subsection I to section 9.1.1 as follows:
1. Definition

1.1. Formula First is a class for single seat racing cars based on components from the standard Volkswagen Types 1 sedan, as originally manufactured by Volkswagen from 1966 to 2004. Since it is a restricted class, all allowable modifications are stated herein. The purpose of the Formula First class is to emphasize driver ability and to encourage the participation of owner/builders and owner/preparers while using proven Volkswagen components (or exact replicas). Homologation is required for all cars registered after January 1, 1983. Homologation for FS classification is required on all Formula First cars.

Specs deleted from this document. Available if needed

Grand Touring
Item 1. Effective 11/1/08: Change the first sentence of section 9.1.2.F.4.e.10 as follows:
Any readily available manual transmission having no more than *six (6) forward speeds in GT2 and* five (5) forward speeds *in GT3 and Lite* and an functional reverse speed may be used, provided that it is fitted in the same basic location used in the standard production automobile.

February 6-10 minutes, published March Fastrack

Item 2. Effective 11/1/08: Change section 9.1.2.E.1.a.1 as follows:
~~All cars shall use a single Holley Model 4150 carburetor, restricted to~~ *Any modular 4bl carburetor may be used with a maximum of a* one and eleven-sixteenths (1-11/16) inch throttle bore *and 1-1/2" SAE bolt pattern*, unless alternate carburetion and/or dimensions are specified in the GTCS.

April 1 minutes, published May Fastrack

Item 3. Effective 11/1/08: Change section 9.1.2.F.4.b.12 as follows:
A spoiler may be fitted to the font of the car. It shall not protrude beyond the overall outline of the car as viewed from above except *as follows:*

- GT2: ~~where~~ a front splitter may extend up to *three* (*3*) inches.
- *GT3: a front splitter may extend up to two (2) inches.*
- In all classes, the spoiler shall not extend aft of the forward most part of the front fender opening (cutout), and shall not be mounted ...

April 1 minutes, published May Fastrack

Item 4. Effective 11/1/08: Change section 9.1.2.F.4.b.13 as follows (portions omitted remain unchanged):

A spoiler or a Club Racing specified rear wing for GT2 *and GT3* may be fitted to the rear of the car. Note: O.E.M. rear spoilers and wings are note permitted unless specifically listed on the vehicle's specification form.
If a spoiler is used, it shall be contiguous with the bodywork and shall comply with the following:
(Existing sections 9.1.2.F.4.b.13.a-d)
If a Club Racing specified wing is used (GT2 *and GT3* only), it shall comply with the following:

E. Specifications: Unmodified single element Liebeck airfoil #1LD104E scaled to a chord length of 10.75 inches.
- The maximum cross-sectional tolerance of the wing profile is 0.060 inch.
- *In GT2 only, a* maximum 0.50 inch Gurney tab is allowed at the trailing edge of the wing element. The tab must be mounted 90 degrees to the upper wing surface. No air may pass between the tab and the wing.
- The wing end plates must fit within a rectangle measuring 11.00 inches long by 4.00 inches tall. No portion of the wing element or tab may extend beyond the perimeter of the endplate. The endplates must be mounted parallel to the vehicle centerline, and must be perpendicular to the ground. Endplates must be flat, with no curvature or Gurney tabs.
- *GT2:* The maximum width of the entire wing assembly (wing element, endplates, Gurney tab *(GT2)*, and mounting hardware) is 68.00 inches but no wider than the rear body width including fender flares.
- *GT3: The maximum width of the entire wing assembly (wing element, endplates, and mounting hardware) is 64.00 inches but no wider than the rear body width including fender flares.*

F. Wing mounting:
- *GT2:* The entire wing assembly must be mounted below the highest point of the roof or roll cage main hoop whichever is higher measured at the highest point.
- *GT3: The entire wing assembly must be mounted at least 4.00 inches below the highest point of the roof or roll cage main hoop whichever is higher measured at the highest point.*
- *GT2 and GT3:* The trailing edge of the wing assembly must be located within an area defined by a point; 6" forward of rearmost bodywork and the rearmost bodywork measured at vehicle centerline.
- Two wing mounting posts must be used, with each one located between 8"-20" inboard from end of wing. The exposed portion of the wing mounting posts shall not exceed 85 square inches each. Curved brackets will be measured as if they're in a flat plane as viewed from the side. Mounting brackets are to be included in measurement.
- The maximum wing angle from horizontal is 30-degrees.

April 1 minutes, published May FasTrack, amended April 26-27 & May 6 minutes, published June Fastrack

Item 5. Effective 11/1/08: Add the new subsections 14 and 15 to section 9.1.2.F.4.b, as follows:

14. GTLite rear wing: The maximum width of the entire single element, flat plane wing assembly is 56.0 inches wide x 8.0 inches chord depth, but no wider than the body width including fender flairs. Wing endplates must fit within a rectangle measuring 8.5 inches long by 3.00 inches tall. Endplates must be flat with no curvature or Gurney tabs. A maximum 1/2 inch wicker-bill may be employed. The wing must be mounted to trunk/deck lid with two (2) mounting brackets. Each mounting bracket must attach to the wing at a point that is at least 2 inches inboard of the endplates. The internal parts of the brackets may protrude through the trunk/deck lid to allow for the two parts of each bracket to be fastened together. The rear wing must be mounted a minimum of 6.0 inches below the peak of the roof. Cars with a wagon-back style body (e.g., Civic, Fiesta, Mini, etc.) may have the wing mounted at the trailing edge of the roof, a maximum of 4.0 inches above the roofline. The mounting position will be measured between the highest points of the roof and wing. In either application, the trailing edge of the wing assembly must be located within an area defined by a point, 6 inches forward of rearmost bodywork and the rearmost bodywork measured at vehicle centerline.

15. GTLite front splitter: A front splitter may be added that is a flat single-plane, with an exposed top surface not more than 2.00 inches. The splitter shall be mounted flat. The splitter must not extend laterally any further than the widest point of the front fenders. The splitter must have no vertical deviations. Additionally, a maximum of four (4) rods or cables may be used to support the front, and/or the sides of the splitter. A single-plane vertical close-out panel may be used to bridge any gaps between the front fascia and splitter.

August 5 minutes, published September Fastrack

Improved Touring

Item 1. Effective 1/1/09, change section 9.1.3.C by deleting the fifth paragraph as follows:

The Vehicle Identification Number (VIN) shall correspond with the automobile classified, and will determine the model and type for competition purposes. A minimum of two (2) VIN plates and/or stampings is required.

November 2-3 minutes, published December Fastrack

Item 2. Effective 1/1/09: Reclassify the Stratus to ITB at 2,870 lbs

March 4 minutes, published April Fastrack

Item 3. Effective 1/1/09, reclassify the 1985-89 Toyota MR2 to ITB at 2,525 lbs.

April 26-27 & May 6 minutes, published June Fastrack

Production

Item 1. Effective 11/1/08, change section 9.1.5.E.11.a as follows:
The use of a fuel cell is required unless the stock fuel tank is located between the axle centerlines and within the main chassis structure (i.e. frame rails, etc.). ~~Fuel cells are required on all Production Category cars, unless the car uses a **stock** plastic (non **metal**) fuel tank which installed in its **stock** location, has the centerline of the fuel tank located between the axle **centerlines** of the car and between the frame rails.~~ When the **stock** fuel tank is retained, it must be installed in its **stock** location, **additional** retention straps and other protection can be mandated on a car-by-car basis. Fuel cell mounting, location and fuel cell or **stock** fuel tank filler cap and vents, must meet the **specifications** of the GCR section 9.3.26.

April 26-27 & May 6 minutes, published June Fastrack

American Sedan

Item 1. Effective 11/1/08: Change section 9.1.6.D.1.g.1 as follows:
Cam timing, timing chains, ~~gears,~~ woodruff keys, dowel pins, and sprockets are unrestricted. Double row chains may be substituted for single row chains. *Timing belts and timing gears are prohibited, unless fitted as original equipment.*

April 1 minutes, published May Fastrack

Item 2. Effective 11/1/08, change section 9.1.6.D.7.h as follows:
Underhood bracing on stock hoods may be modified or removed. *Fiberglass hoods, including cowl hoods up to 3 " may be used. Otherwise, the external profile of the hood shall remain stock. Ram air openings and rear openings must be blocked off to prevent passage of air.*

April 26-27 & May 6 minutes, published June Fastrack

Item 3. Effective 11/1/08: Change section 9.1.6.D. 1.g.4 as follows:
Rocker arms may be replaced with any ~~individual~~ rocker arm. Shaft mounted rocker arms are ~~prohibited~~ *permitted* unless *otherwise* fitted as standard*, using a minimum of eight shafts*. Valve train stud girdles are allowed.

August 5 minutes, published September Fastrack

Item 4. Effective 11/1/08: Change section 9.1.6.D. 9.c as follows:
Fuel cells are mandatory. Cell size is not restricted. It shall be located within twelve (12) inches of the original fuel tank location *or behind the rear axle*.

August 5 minutes, published September Fastrack

Showroom Stock

Item 1. Effective 11/1/08: Add new section 32 to section 9.1.7.E as follows:
32. Cosmetic plastic engine covers may be removed.

January 8 minutes, published February Fastrack

Item 2. Effective 11/1/08: Add new section 24 to section 9.1.7.E and renumber subsequent sections:
24. Stock replacement brake rotors may be obtained from sources other than the manufacturer provided they are the exact equivalent of the stock rotors.

January 8 minutes, published February Fastrack

Item 3. Effective 11/1/08, change section 9.1.7.B as follows:

~~Cars eligible for competition in a given year are those classified by the Club Racing Board by December 31st of the previous year. The Club Racing Board may reclassify cars during their first year of competition, effective the following year. Cars classified will be approved by ARB, EPA and DOT for sale in the United States. They shall be models intended to be available to the general public for purchase.~~

~~Current model year cars will be eligible for classification consideration if they are available to the general public through the normal dealer network by March 1st of the model year.~~
~~To be considered for classification a factory workshop manual or its equivalent and a Motor Vehicle Manufacturers Association (MVMA) "Manufacturers Motor Vehicle Specifications" form or equivalent, the Official SCCA Vehicle Technical Sheet (VTS), shall be on file with the Club Racing Department. Should the factory workshop manual not be available by December 31st of the year of classification, the official SCCA VTS shall be considered sufficient for the purposes of classification and shall be supplanted by the factory workshop manual or its equivalent (See TCS Section 9.1.10.B) when it becomes available. Copies of the official SCCA VTS sheets may be acquired from the SCCA National Office Technical Department.~~

~~If the manufacturer certifies that there are no technical changes between model years of a previously classified car, the factory workshop manuals or equivalent and the Official SCCA VTS on file at the National Office shall be considered sufficient for classification and compliance purposes. The certification shall become a permanent record of the classification in the National Office Technical Department.~~

Only those cars listed each year are eligible to compete. No updating or backdating of cars, models, specifications, and/or components thereof shall be permitted. Additions and deletions of automobiles shall be at the discretion of the SCCA. ~~Automobiles sold by~~

~~the Manufacturer/Distributor that are designated not for public use or cannot be licensed are not allowed in SS classes.~~ The vehicle identification number (VIN) shall correspond with the model automobile classified. VIN plates or stampings shall remain in place. There must be a minimum of two (2) VIN plates or stampings that correspond with the model automobile classified. The tenth (10) position letter of the VIN determines the model year of the car ("W" = 1998, "X" = 1999, "Y" = 2000, "1" = 2001, "2" = 2002, "3" = 2003, etc.).

April 26-27 & May 6 minutes, published June Fastrack

Spec Miata

Item 1. Effective 11/1/08: Change the second paragraph of section 9.1.8.C.7.i as follows:
To improve driver exit through the window area, the driver vent window and ~~vertical~~ vent window supporting *frame* may be removed as a pair. If removed, ducting may be in the passenger side vent window only.
(April 1 minutes, published May Fastrack)

Item 2. Effective 11/1/08: Change section 9.1.8.C.6.d.m as follows:
The front track shall not exceed 1450mm. The rear track shall not exceed 1465mm for the 90-97 model years and 1475mm for the 99-05. ~~Track may be changed to accommodate larger tires, provided that there is safe tire/fender/chassis clearance under all conditions of steer, bump, and rebound.~~ Aftermarket wheel studs, lug nuts, and wheel spacers are permitted. *If spacers are used they shall be no greater than 13mm and equal on all four corners (i.e., no offset stagger side to side).*
(April 1 minutes, published May Fastrack)

Sports Racing
Item 1. (CSR) Effective 1/1/09, change the name of Sports Racer SCCA to Enterprises Sports Racer.
(March 4 minutes, published April Fastrack)

Touring
Item 1. Effective 11/1/08: Add new section 6 to section 9.1.10.D.6.a. as follows:
6. Stock replacement brake rotors may be obtained from sources other than the manufacturer provided they are the exact equivalent of the stock rotors.
(January 8 minutes, published February Fastrack)

Item 2. Effective 11/1/08, change section 9.1.10.C.3 as follows:

~~Cars eligible for competition in a given year are those classified by the SCCA Club Racing Board by December 31 of the previous year. Cars classified shall have been approved by the ARB, EPA, and DOT for sale in the United States, and shall be models intended to be available to the general public for purchase.~~

~~a.~~ The Club Racing Board may classify any particular model of a car, and may permit specific factory options for that car. Such options shall be listed on the Specification Line for that vehicle. No unlisted models or factory options are eligible. If no specific model or options are listed on said line, the classified car shall be the base model with no options. Converting a car delivered with an automatic transmission to a manual transmission is allowed as long as all components which differ, including, but not limited to, radiator, springs, engine management systems, final drive ratio, etc., are converted to manual transmission specification.

~~b. To be considered for Classification, a factory workshop manual and a Motor Vehicle Manufacturers Association (MVMA) "Manufacturers Motor Vehicle Specifications" form, or its equivalent, the official SCCA Vehicle Technical Sheet (VTS), shall be on file with the Club Racing Department. Should the factory workshop manual not be available by December 31st of the year of classification, the official SCCA VTS shall be considered sufficient for the purposes of classification and shall be supplanted by the factory workshop manual or its equivalent (See TCS 9.1.10.B) when it becomes available. Copies of the official SCCA VTS may be acquired by the SCCA National Office Club Racing Technical Services Department.~~

~~If the manufacturer certifies that there are no technical changes between model years of a previously classified car, the factory workshop manuals or equivalent and the official SCCA VTS on file at the National Office shall be considered sufficient for classification and compliance purposes. The certification shall become a permanent record of the classification in the National Office Club Racing Technical Services Department.~~

> *a* ~~c~~. Only those cars listed each year are eligible to compete. Additions and/or deletions of automobiles shall be at the discretion of the SCCA.
>
> *b* ~~d~~. "Special Performance" specifications from the manufacturer which go beyond those listed in the Touring Specifications book will not be considered valid. Any manufacturer determined to be supplying false specifications to competitors or to the SCCA may be advised that said specifications may be withdrawn or the eligibility of the car(s) involved shall be terminated. The Club Racing Board is authorized to implement these terminations on an immediate basis without the approval of the Board of Directors.
>
> *c* ~~e~~. In the case of service circulars, recalls, etc., the burden of proof of validity shall be upon the competitor.

April 26-27 & May 6 minutes, published June Fastrack

MOTION: To waive the provisions of GCR Section 3.9.2.a, to allow Terry Biner to compete in the 2008 Runoffs. (Christian/Sauce) FAILED, Voting Yes, Sauce, Christian, Not Voting Jones

MOTION: To waive the provisions of GCR Section 3.9.2.a, to allow Ken Payson to compete in the 2008 Runoffs. (Introne/ Sauce) FAILED, Voting Yes, Introne, Sauce, Not Voting, Jones

MOTION: To retain Ken Patterson as Chairman of the Stewards for 2009. (Noble/Sauce) PASSED, Unanimous, Not Voting, Jones

MOTION: To allow Kyle Baker to change his Division of record from Southern Pacific to MiDiv. (Noble/ Christian) PASSED, Not Voting, Jones

MOTION: That the Board of Directors not grant waivers to allow future National Races prior to January 1, of the competition year. Effective 1/1/09. (Creighton/Sauce) PASSED Voting No, Christian, Allen, Abstaining, Porterfield, Not Voting, Jones

MOTION: That the Club Racing Board use existing procedures, to implement changes to the GCR, as required, such that:
Effective January 1, 2009, change GCR section 5.7.2 paragraph 3, to read "Sound control ~~will~~ may be in effect for all events. All cars .....information. A Driver registering a single sound level reading over ~~103db~~ that allowed, shall not be black flagged. If a driver....." (Porterfield/Christian) PASSED, Abstaining, Allen, Lybarger, Introne. Not Voting, Jones

MOTION: That the Club Racing Board use existing procedures, to implement changes to the GCR, as required, such that:
Effective January 1, 2009 add to GCR section 9.3.28.A "The numeral '1' shall be reserved for the current National Champion in each class". In the event two or more National Champions are entered in the same run group the first to register shall have preference. (Christian/Sauce) PASSED Voting NO, Noble, Creighton, Lybarger. Not Voting, Jones

MOTION: That the Club Racing Board use existing procedures, to implement changes to the GCR, as required, such that:

1. over a five year period starting in 2009,
2. minimum participation for classes to retain National status, gradually increases from 2.5 to 3.5,
3. that only classes that meet the required minimum are invited to the following year Runoffs,
4. the current "incubator" classes continue their existing exemption

(Christian/Sheridan) FAILED, Voting Yes, Christian, Sheridan, Not Voting, Jones

MOTION: To adjourn. (Porterfield/Allen) PASSED.

Respectfully submitted,

Jim Christian
Secretary

CLUB RACING BOARD MINUTES

CLUB RACING BOARD |SPORTS CAR CLUB OF AMERICA, INC. | *Sept. 2, 2008*

The Club Racing Board met by teleconference on September 2, 2008. Participating were Bob Dowie, Chairman; Chris Albin, Stan Clayton, Dave Gomberg, Peter Keane, and Russ McHugh. Also participating were Jim Christian and Jerry Wannarka, BoD Liaisons; KP Jones, BoD Guest; John Bauer, Technical Manager, Club Racing; Kevin Yaghoubi, Technical Coordinator, Club Racing; and Lauri Burkons, CRB Secretary.

In addition to those items covered in Technical Bulletin 08-10, the following decisions were made:

SUBMITTED TO BoD FOR APPROVAL

The following subjects will be referred to the Board of Directors for approval. Address all comments, both for and against, to the Club Racing Board. Comments may be e-mailed to crb@scca.com.

GCR

Item 1. Effective 11/1/08: Add new section 9 to section 9.4.5.E as follows:

Cars may compete with FIA homologated cages provided the cage was built by the manufacturer or a manufacturer-designated shop/team and approved for use.

Prepared

Item 1. Effective 11/1/08: Add the following sentence section 9.1.4.E.3:

Engines may be bored to a maximum of .040 inch over standard bore size.

Item 2. Effective 11/1/08: Change section 9.1.4.E.15 as follows:

The intake and exhaust ports may be ported*, unless otherwise noted*. The valve guide may be machined as part of this porting. *The intake manifold may be port matched to the head(s), provided no material is removed further than one inch in from the manifold to head mounting surface(s).*

Item 3. Effective 11/1/08: Add the following paragraph to section 9.1.4.E.18:

Unless otherwise noted, the follow restrictions apply to turbochargers. Turbocharging is permitted only with a factory turbo/engine combination. The inlet restrictor (if required) shall be positioned in the compressor inlet housing. Turbochargers may not be added to engines that did not originally come equipped with one. Swapping of turbochargers between engine makes and models is prohibited. Supercharged cars may be approved on a case-by-case basis. Contact the Club Racing Technical Office for details.

Item 4. Effective 11/1/08: Add the following sentence to section 9.1.4.F.3:

The number, type, and location of intercoolers are free.

Item 5. Effective 11/1/08: Add new subsection 3 to section 9.1.4.H as follows:

3. Cars with sequential shift transmissions shall increase the required minimum weight by 100 lbs.

Item 6. Effective 11/1/08: Add the following sentence to section 9.1.4.L.9:

Cars with live axle RWD may reduce the minimum weight by 50 lbs.

Item 7. Effective 11/1/08: Add new subsection 16 to section 9.1.4.L as follows:

16. Front wheel drive cars may reduce their minimum weight by 50 lbs. Front wheel drive cars with a strut type front suspension may reduce their minimum weight by an additional 50 lbs.

Item 8. Effective 11/1/08: Delete section 9.1.4.1.A.3.f in its entirety:

~~f. Weight Requirements-All cars shall meet the required minimum weight of 3100 lbs. Cars with sequential shift transmissions shall meet the required minimum weight of 3200 lbs.~~

Item 9. Effective 11/1/08: Replace section 9.1.4.1.B.1 as follows:

~~1. Intake Requirements~~

~~a. All cars shall use a Single Inlet Restrictor system as defined in Appendix B, unless noted ootherwise.~~

~~b. The following restrictors shall be used:~~

~~2 valve engine—42mm SIR~~

~~4 or more valve engine—40mm SIR~~

~~Rotary engine—44mm SIR~~

~~c. Supercharging/Turbocharging is permitted with an SIR as listed above. The SIR shall be positioned upstream of the compressor inlet.~~

~~d. Carburetors are permitted with an SIR as listed above.~~

1. Intake Requirements: All cars shall use the stock or approved air metering device (e.g., carburetor, throttle body, etc.) and intake manifold for the installed engine, unless noted otherwise.

Item 10. Effective 11/1/08: Add new subsection F to section 9.1.4.1 as follows:

The following car and engine combinations are approved in BP. Contact the Club Racing Technical Office to add additional cars.

BP	Engine Displacement	Minimum Weight	Restrictor	Notes
Cadillac CTS-V	6000	3300		
Chevrolet Corvette	5700	3135		
Chevrolet Corvette	6000	3300		
Chevrolet Camaro	5700	3135		
Chevrolet Camaro	5000	2750		
Dodge Viper	8000	3135	60mm Flat Plate	
Dodge Viper	8300	3300	60mm Flat Plate	
Dodge Neon SRT-4	2400	3000		Alternate turbo permitted
Ford Mustang	5800	3190		
Ford Mustang	5400	2970		
Ford Mustang	5000	2750		
Ford Mustang	4600	2530		
Mitsubishi/DSM	2000	3000		Alternate turbo permitted
Mitsubishi/DSM	2400	3000		Alternate turbo permitted
Pontiac GTO	6000	3300		
Pontiac GTO	5700	3135		
Pontiac Solstice	2000	3000		Alternate turbo permitted
Porsche 996	3600	2808		
Porsche 997	3600	2808		
Saleen SR	5800	3190		

Item 11. Effective 11/1/08: Delete section 9.1.4.2.A.4 in its entirety:

~~4. Weight Requirements~~

~~All cars shall meet the required minimum weight *of 2700 lbs. Cars with sequential shift transmissions shall meet the required mini-*~~

~~*mum weight of 2800 lbs.*~~

Item 12. Effective 11/1/08: Replace section 9.1.4.2.B as follows:

~~B. Engine/Intake Requirements~~

~~1. Engines up to 3000 cubic centimeters are permitted.~~

~~2. Intake Requirements- All cars shall use a Single Inlet Restrictor system as defined in section Appendix B, *unless noted otherwise.*~~

~~3. The following restrictors shall be used:~~

~~2 valve engine - *31mm SIR*~~

~~4 valve engine - *30mm SIR*~~

~~Rotary engine - *33mm SIR*~~

~~4. Turbocharging/Supercharging is permitted with an SIR as listed above, and shall use the factory original unit (no aftermarket turbo/superchargers). The SIR shall be positioned upstream of the compressor inlet. Factory turbo/superchargers may not be converted to models that did not originally come equipped with forced induction. Swapping of turbo/superchargers between makes and models is prohibited.~~

B. Engine/Intake and Weight Requirements

1. Engines up to six cylinders and 3000 cubic centimeters factory displacement are permitted.

2. Intake requirements. All cars shall use the installed engine's stock air metering device (e.g., throttle body) and intake manifold, unless noted otherwise.

3. Minimum weights for cars with normally aspirated piston engines will be determined by 1.1 lbs/cc displacement for the installed engine (see following table). Displacement is determined by the factory displacement for the installed engine. For weight assignment purposes engine displacement will be rounded to the nearest 100cc (e.g., 2150cc = 2200cc or 2149cc = 2100cc).

Factory Engine Displacement (cc)	*Minimum Weight*
1600	*1760*
1700	*1870*
1800	*1980*
1900	*2090*
2000	*2200*
2100	*2310*
2200	*2420*
2300	*2530*
2400	*2640*
2500	*2750*
2600	*2860*
2700	*2970*
2800	*3080*
2900	*3190*
3000	*3300*

4. The Mazda 13b and Renesis rotary engines are permitted at 2600 lbs. The 13b may be street ported. The Renesis shall remain unported.

5. All turbocharged engines shall use a compressor inlet restrictor/weight combination from the following table.

Inlet Restrictor (mm)	*Minimum Weight*
33	*2200*
35	*2475*
37	*2770*
39	*3100*

Item 13. Effective 11/1/08: Change section 9.1.4.A. as follows:

No model years older than 19~~90~~*85* will be permitted.

Grand Touring

Item 1. Effective 11/1/08: Change section 9.1.2.D.8.2.E. as follows:

A ~~Unmodified~~ single element, *single plane* ~~Liebeck~~ airfoil ~~#1LD104E~~ scaled to a chord length of 10.75 inches *is permitted*. ~~The maximum cross sectional tolerance of the wing profile is 0.060 inch.~~

Item 2. Effective 11/1/08: Change section 9.1.2.F.4.b.13.E. as follows:

A ~~Unmodified~~ single element, *single plane* ~~Liebeck~~ airfoil ~~#1LD104E~~ scaled to a chord length of 10.75 inches *is permitted*. ~~The maximum cross sectional tolerance of the wing profile is 0.060 inch.~~

RECOMMENDATIONS TO THE BoD

The CRB would like the BoD to consider the following proposal in place of GCR Item 10 on the current Recommended Rule Changes list. This proposal provides a protest-based mechanism for doing laboratory testing for prohibited substances. It also includes an expanded list of prohibited substances compared to our current fuel standards. (This proposal provides the details of the general plan presented to you by our liaisons as published in the June Fastrack.) Also, you will find at the end a change to GCR 8.3.3 that is needed to avoid a conflict between 8.3.3 and this proposed change to 9.3.25.A.

1. This fuel testing proposal is the result of consultation with various persons familiar with fuel properties and fuel blending. Several other approaches to fuel control were considered and rejected (e.g., spec fuels, track fuels) for reasons of practicality.

2. The use of gasoline carries some inherent safety risks. The purpose of the testing described in the proposal is to decrease the health and safety risks to all participants (racers, officials, and crew) associated with certain compounds sometimes used in racing fuels. It was not our primary intent to level the playing field. Nonetheless, some fuels in use today may not be compliant under this proposed fuel testing regime because they rely upon compounds that appear in the prohibited substances list.

3. A laboratory has been identified to do the testing. Fuel samples will be taken at the track by Tech. Tech will be supplied with test kits consisting of vials, pipettes and packaging for transport. The package will be sent to the laboratory. The laboratory will provide test results within 3-5 days after receipt of the samples. The cost of each test is approximately $350. This includes the testing, the sample kit and shipping.

9.3.25. FUEL

All cars shall use fuel, as defined below, unless a specific exemption is made in the provisions for a specific category/class.

A. Permitted Fuel

Permitted fuel is herein defined as gasoline *meeting specified dielectric constant standards and not containing any prohibited substance in excess of stated limits.* Gasoline is a mixture of refined hydrocarbons. Gasoline is an electrical insulator and its relative effectiveness as an insulator is represented by its dielectric constant (D.C.). The ~~average~~ D.C. of gasoline, ~~as~~ *will be* measured by an SCCA Fuel Check Meter (High Desert Engineering HDE-1)~~, is defined as "0.0"~~. *The "0.0" calibration of the SCCA Fuel Check Meter is set against reagent or laboratory grade cyclohexane.* Gasoline may be tested and certified at SCCA events by the determination of the dielectric constant using the SCCA Fuel Check meter and through the application of various chemical analyses ~~(e.g., Reagent "A").~~ *If a competitor's fuel is not compliant with the fuel standards below, the Chief Steward shall take appropriate action (Chief Steward's Action or Request for Action). In addition, fuel may be subject to laboratory testing.*

Any participant may protest the fuel in any car to determine compliance with the provisions of these fuel rules. In addition to the standard protest fee, a bond shall be collected from the protestor and the driver or entrant of the protested car. The bond covers the cost of laboratory testing of the fuel sample(s) and transportation costs. The laboratory testing shall be limited to determining the presence of any prohibited substance in excess of the allowed amount. If the test is negative, the protestor's bond will be used to pay the laboratory fees and transportation. If the test is positive (any banned substance present in excess of the stated limits), the protested driver's or entrant's bond will be used to pay the laboratory fees and transportation costs. The unused bond will be returned. In the case of a CSA or RFA resulting in laboratory testing, the organizing Region shall take the role of the protestor. If the laboratory results

show that the protested fuel is non-compliant, the Chief Steward or the SOM shall assess appropriate penalties.

~~SCCA Approved Fuel Meter: High Desert Engineering Model G-01~~
~~SCCA Approved Reagent Test(s) Germane Engineering Reagent "A"~~
~~use of propylene oxide, ethylene oxide, paradioxane, and basic nitrogen or sulfur bearing compounds (i.e. pyridine, aniline, pyrrole, dimethylsulfoxide, etc.) is prohibited~~.

~~Fuel Standards~~			
~~Classes~~	~~Type~~	~~DC max~~	~~Reagent A~~
~~All Prepared, FB, FE, SS, SM, T, IT, SRF, and Olds SR, and Elan spec DP-02 running as CSR~~	~~Gasoline w/ no added oil~~	~~15~~	~~N/A~~
~~All other classes (incl. 2-cycle w/ oil injection)~~	~~Gasoline w/ no added oil~~	~~0~~	~~No pos.~~
~~All 2-cycle w/o oil injection~~	~~Gasoline w/ oil mixture~~	~~2~~	~~No pos.~~
~~All rotary engines~~	~~Gasoline w/ or w/o oil mixture~~	~~15~~	~~N/A~~
Fuel Standards			
Classes	***Type***	***DC max***	
SSB, SSC	*EPA-compliant fuel meeting the manufacturer's requirements as stated in the owner's manual*	*15*	
All other classes	*Gasoline with or without added oil*	*15*	

The use of any substance in the following table in excess of the stated limit is prohibited.

Chemical Compounds Prohibited or Restricted in SCCA Race Fuels

Compounds	***Examples***	***Maximum Percentage By Weight Allowed***
Total Aldehydes	*Acetaldehyde, Acrolein, Formaldehyde*	*1.0*
Benzene		*2.0*
Total Cyclic ethers	*1,4 Dioxane, Furan, Tetrahydrofuran*	*0.05*
Total Dienes(Diolefins)	*1,3 Butadiene, Isoprene*	*1.0*
Ethanol		*10.0*
Total Epoxides	*Ethylene oxide, Propylene oxide*	*0.05*
Methanol		*1.0*
Total Metal Compounds	*Lead (e.g.,TML, TEL), Manganese (e.g. MMT), Boron and Chromium*	*5.0 gm/gal*
Total Nitrogen Compounds	*Nitromethane, Nitroethane. Nitropropane, and all aromatic nitrogen compounds such as Nitrobenzene, Ammonia, Amines and their salts, Aniline, Hydrazine, Pyridine, Pyrrole, Benzidine*	*0.05*
Styrene		*1.0*
Total Sulfur Compounds	*Dimethylsulfoxide, Thiophene*	*0.05*

8.3.3 Add a new sentence to the end of the first paragraph.

Any participant may protest the fuel used in any car in a competition as specified in 9.3.25.

MEMBER ADVISORIES

In accordance with GCR 9.12.B, the CRB has dispersed all GP cars to FP and HP. Effective 1/1/09, delete G Production in 9.1.5 and remove the GP specification pages.

NEW CAR CLASSIFICATIONS

None

REFERRED or TABLED

Forumla

FA – Maintain the 25 lb FI penalty (4 letters). Tabled for further input.

Improved Touring

1. ITB – Re-evaluate the 88-91 Honda Civic DX hatchback/sedan specifications (Giles). Tabled for further research.
2. ITB – Reduce the weight of the 1979 BMW 320i (Engleman). Tabled for further research.
3. ITR – Allow V8s (Elmer). Tabled for further research.
4. ITS – Classify the 1999+ Mk IV VW Golf and Jetta VR6 (Alphin/Ellis-Brown). Tabled for VTS sheet.

Production

HP – Reduce the weight of the FP chassis/LP motor Spridgets (Larsen). The car will be included in the year-end review of HP.

Touring/Showroom Stock

1. T1 – Allow an alternate dry sump system for Corvettes (Aquilante). There is no proven need.
2. T1 – Help the C5 Corvette (Buttermore). Tabled for further research.
3. T1 – Allow an alternate shock mount for all T1 cars (Ingle). Tabled for further research.
4. T2 – Allow brake duct kit for the Solstice (Ziegler). Tabled for receipt of parts.
5. T3 – Help the Lotus (Aubuchon). Tabled until the BoD decides what will happen to T3 for the 2009 Runoffs.

NOT RECOMMENDED

Grand Touring

1. GTL – Classify the Lotus 7 body (Foley). There is no direct link manufacturer to manufacturer.
2. GTL – Allow the Toyota 1600 cc, 2-valve, non-crossflow a 27 mm SIR (Bacon). The SIR size is determined by engine architecture.

Improved Touring

1. IT – Allow alternate bolt patterns (Alphin). You must purchase he correct wheels for the vehicle.
2. IT – Allow 15x7 wheels in all classes (Alphin). This would cause an unnecessary cost increase.
3. IT – Allow cars with power steering racks to convert to manual steering racks (Ellis-Brown). This would create a model that was not built.
4. IT – Dual classify the MR2 in ITA and ITB (Watney). Dual classification is contrary to class philosophy.
5. IT – Allow adjustable upper and lower control arms (Nebuda). This is “rules creep.” The change is allowed in Production, not IT.
6. IT – Allow removal of the following: anti-theft/security/vehicle immobilization system; power door locking system; cruise control system; windshield wiper rain sensor system; electronic stability control system, electronic differential locking system; hood, rear hatch, and trunk gas spring supports; steering column switch assembly (Ellis-Brown). The rules are adequate as written.
7. ITR – Classify the 1995 BMW M3 (Ambivero). The car has too much potential for the class.
8. ITR – Reduce the weight of the RX8 (Marcus). The car is accurately classified at its current weight.

Production

1. P – Allow alternate roll cage designs (Haynes). The roll cage rules provide a set of minimal parameters for the design.
2. EP/FP – Correct the Volvo P1800, 1800S/E/ES transmission specs (Rose). The 4-speed will stay in FP.

Touring/Showroom Stock

SSC – Allow the 02-03 Civic Si a 225/50/15 (Jones). The car is classified correctly.

Previously Addressed

Addressed in Technical Bulletin 08-09 or the September 2008 FasTrack:

GCR – Safety equipment classification (Dean).

SRF – Head clearance issues (Wright).

EP – Correct the BMW Z3 classification – block material (Sirota).

T2 – Classify the Saturn Sky (Kleeman).

Addressed in Technical Bulletin 08-05 or the May 2008 FasTrack:

GT3/GTL – Allow wings and splitters (4 letters).

Addressed in the BoD minutes:

IT – Remove the VIN requirement (Alphin).

P – Allow the 83-89 Scirocco the use of the stock fuel tank (Trainer).

No Action Required

GCR

1. Opposition to prohibition of leaded fuels (Burns). Thank you for your input.
2. Opposition to combined practice times for double national weekends (McCarthy). Thank you for your input.
3. Sound input (Staveley). Thank you for your input.
4. Support for FIA 1986 suits (Walthew). Thank you for your input.

Grand Touring

Disallow fuel cooling devices (Lentz). Fuel cooling devices are not currently permitted.

Improved Touring

1. IT – Are switches considered instruments (Ellis-Brown). Switches are not instruments.
2. ITA – Support for reclassifying the MR2 to ITB (Jaso/Hummel). Thank you for your input.
3. ITA – Opposition to reclassifying the MR2 to ITB (Watney). Thank you for your input.
4. ITR – Combine the SH and non-SH Prelude spec lines (Uhlinger). Thank you for your input.

Production

1. P – Consolidation input (8 letters). Thank you for your input.
2. P – Support for stock fuel tanks (Haywood/Lyle). Thank you for your input.
3. P – The competition adjustment formula is wrong (Haynes). Thank you for your input.
4. P – Can uprights, spindles, and other attachment points be modified (Lamkin). The rules are adequate as written. Spindle modifications are not permitted.

Touring/Showroom Stock

1. T3 – Support for classification of the BMW Z4 Coupe 3.0 (Brecht). Thank you for your input.
2. T3 – BMW Z4 3.0 input (Leithauser). Thank you for your input. The process weight is 3,300 lbs.
3. SSB – Opposition to Solstice penalties (Moore/Wolverton). Thank you for your input.

Resumes

F/SR – Jim Downing. Thank you for your interest. We will keep your resume on file.

P – Al Seim. Thank you for your interest. We will keep your resume on file.

SM – Sam Henry. Thank you for your interest. We will keep your resume on file.

SM – Yusuf Mohamed. Thank you for your interest. We will keep your resume on file.

SM – Karl Zimmerman. Thank you for your interest. We will keep your resume on file.

CLUB RACING TECHNICAL BULLETIN

DATE: September 2, 2008
NUMBER: TB 08-10
FROM: Club Racing Board
TO: Competitors, Stewards, and Scrutineers
SUBJECT: Errors and Omissions, Competition Adjustments, Clarifications, and Classifications.

All changes are effective 10/1/08 unless otherwise noted.

Grand Touring
GT3

1. Engines – TOYOTA , p. 309, classified in the TB 08-07, **effective 11/1/08**, change the 4AG specs as follows: Weight (lbs): (~~1950~~ *2000* w/ alt. stroke).

GTL

1. Cars – SUZUKI, p. 324, correct the specs as follows: Years: ~~98~~ *95-01*, Wheelbase: ~~89.2~~ *93.1.*
2. *Cars – SUZUKI, p. 324, add to the specs as follows: Model: Swift, Years: 89-94, Body Style: 4dr; Driveline: FWD, Wheelbase: 93.1.*
3. *Engines – TOYOTA , p. 325, correct the 4A-C/L/LC specs as follows: Head Type: Alum,* ~~*Crossflow*~~ *Non-Crossflow.*

Improved Touring
ITR

1. Classify the 03-05 BMW Z4 2.5 in ITR.

Effective 1/1/09, Add new spec line to ITCS, p. 343, BMW Z4 2.5 (03-05). Engine Type: 6 Cyl DOHC, Bore x Stroke(mm) / Displ.(cc): 84.0 x 75.0 / 2494, Valves IN & EX(mm): (I)33.0 (E)30.5, Comp. Ratio: 10.5, Wheelbase(in): 98.2, Wheel Dia.(in): 16, Gear Ratios: 4.23, 2.52, 1.66, 1.22, 1.00, Brakes Std.(mm): (F)286 Vented Disc (R)280 Solid Disc, Weight(lbs): 2795.

2. Classify the 74-77 Porsche 911/911S/911 Carerra in ITR.

Effective 1/1/09, Add new spec line to ITCS, p. 344, Porsche 911/911S/911 Carerra (74-77), Engine Type: 6 Cyl SOHC, Bore x Stroke(mm) / Displ.(cc): 90.0 x 70.4 / 2687, Valves IN & EX(mm): (I)46.0 (E)44.0, Comp. Ratio: 8.5, Wheelbase(in): 89.4, Wheel Dia.(in): 15, Gear Ratios: 3.18, 1.83, 1.26, 1.0, 0.82, Brakes Std.(mm): (F)282.5 Vented Disc (R)290 Solid Disc, Weight(lbs): 2400

Production
EP

1. BMW Z3 2.5L (97-00), classified in the TB 08-03, correct the specs as follows: BMW Z3 ~~2.5L~~ *2.8L* (97-00), Brakes Std.(mm): (F)~~300~~ *286* Vented Disc (R)~~294~~ *272* ~~Vented~~ *Solid* Disc.
2. Volvo P-1800, 1800S, 1800E, 1800ES Sports Coupe, p. 430-431, add to the specs as follows: Trans. Speeds: *or 5*.

FP

1. Classify the Saturn SL2 in FP with Level 1 prep.

Effective 11/1/08, Add new spec line to PCS, p. 442-443, Saturn SL2 91-95, Prep. Level: 1, Weight(lbs): 2360, Engine Type: 4 Cyl DOHC, Bore x Stroke(mm): 82.0 x 90.0, Displ.(cc): 1901, Block Mat'l: Aluminum, Head Mat'l: Aluminum, Valves IN & EX(mm): (I)32.3 (E)27.4,Wheelbase(mm): 2601, cpe:2514, Track (F&R)(in): 56.8 / 56.0, Wheels(max): 15 x 6, Trans. Speeds: 5, Brakes Std.(mm): (F)251X18 Vented Disc (R) 245 X 11 Solid Disc or 200 X 30 Drum, Notes: Compression Ratio limited to 9.5 :1.

2. Volvo P-1800/E/S/1800ES Sports Coupe, p. 444-445, correct the notes as follows: Allow ~~B20-E~~ *B20-E* engine assembly

HP

1. Reinstate the Renault LeCar/R5 in HP with Level 2 prep.

Effective 11/1/08, Add new spec line to PCS, p. 442-443, Renault LeCar/R5 76-82, Prep. Level: 2, Weight(lbs): 1830, Engine Type: 4 Cyl OHV, Bore x Stroke(mm): 76.0 x 77.0, Displ.(cc): 1397, Block Mat'l: Iron, Head Mat'l: Alum, Valves IN & EX(mm): (I)34.2 (E)30.3, Carb. No. & Type: (1) 40 DNC, DCNF, IDF,w/ 32mm venturis, (2) 32/36 DGV / DGAV, Wheelbase(mm): 2433(L), 2402(R), Track (F&R)(in): 52.7 / 51.8, Wheels(max): 13 x 6, Trans. Speeds: 4, Brakes Std.(mm): (F)228 Disc (R)180 Drum, Notes:

2. BMW 1600 (68-71), classified in TB 08-01, **Effective 11/1/08,** change the specs to read as follows: Weight(lbs): ~~2100 *2153 **2205~~ *1950 *1999 **2048, Notes:* (2) 40 DCOE sidedraft carbs w/30mm chokes permitted @ 2050 *2101 **2153.

Showroom Stock
SSB

1. Mazda6 s (03-07), p. 492, **Effective 11/1/08**, add to the notes as follows: Rear sway bar Mazdaspeed #GRMS-8M-L06-R permitted. Front sway bar Mazdaspeed #GRMS-8M-L06-F permitted.
2. Classify the Nissan Sentra Spec-V in SSB.

Effective 11/1/08, add new spec line to SSCS, p. 492, Nissan Sentra Spec-V (07-08), Bore x Stroke(mm) / Displ.(cc): 89.0 x 100.0 / 2488, Wheelbase(mm): 2535, Track F&R(mm): 1466/ 1446, Wheel Size(in) / Mat'l: 17 x 7 Alloy, Tire Size(stock): 215/45, Gear Ratios: 3.15, 1.94, 1.39, 1.06, 0.81, 0.63, Final Drive: 4.13, Brakes(mm): (F)305 Vented Disc (R)278 Solid Disc, Weight(lbs): 3290, Notes:

3. Pontiac Solstice (06-07), **(Effective 11/1/08)** add to the spec as follows: Saturn Sky.

SSC

1. Ford Focus ZX-3 (00-03), p. 494, change the specs to read as follows: Weight(lbs): ~~2630~~ *2464*.
2. Classify the Mitsubishi Lancer GTS in SSC.

Effective 11/1/08, add new spec line to SSCS, p. 496, Mitsubishi Lancer GTS (2009), Bore x Stroke(mm) / Displ.(cc): 88.0 x 97.0 / 2360, Wheelbase(mm): 2635, Track F&R(mm): 1530 / 1530, Wheel Size(in) / Mat'l: 18 x 7 Alloy, Tire Size(stock): 215/45R18, Gear Ratios: 3.538, 1.913, 1.33, 0.972, 0.775, Final Drive: 4.235, Brakes(mm): (F)294 Vented Disc (R)302 Solid Disc, Weight(lbs): 3150, Notes:

Touring

T1

1. Chevrolet Corvette C6 (05-07), p. 575, **effective 11/1/08**, add to the Notes as follows: *GM power steering cooler P/N 15925777 is permitted.*
2. Chevrolet Corvette Coupe C6 (2008), p. 575, **effective 11/1/08**, add to the Notes as follows: *GM power steering cooler P/N 15925777 is permitted.*
3. Chevrolet Corvette Coupe C6 (2008), p. 575, **effective 11/1/08**, add to the Notes as follows: *GM radiator P/N 25999103 is permitted. GM radiator baffle P/N 25953429 is permitted. GM engine oil cooler (2 per car) P/N 15803358 is permitted.*

T2

1. Acura TL Type S (07-08), classified in the TB 08-01, **Effective 11/1/08**, add to the notes as follows: Rear sway bar (24mm) Progressive Technology #62.0110 permitted. Front spring (1027lb/in) H&R #180-60-180 permitted. Rear spring (1827lb/in) H&R 120-60-320 permitted.

T3

1. BMW 325i (2006), p. 583, **effective 11/1/08**, change the specs to read as follows: Weight(lbs): ~~3200~~ *2950*.
2. Honda S2000 (00-07), p. 583, **effective 11/1/08**, add to the notes as follows: Updating and backdating of flywheel is not permitted.
3. Classify the Lotus Elise in T3.

Effective 11/1/08, add new spec line to TCS, p. 584, Lotus Elise (2005), Bore x Stroke(mm) / Displ.(cc): 82.0 x 85.0 / 1796, Wheelbase(mm): 2301, Wheel Size(in): 16 x 6.5 (F) 17 x 7.5 (R), Tire Size: 195/50 (F) 225/45 (R), Gear Ratios: 3.12, 2.05, 1.48, 1.17, 0.96, 0.82, Final Drive: 4.53, Brakes(mm): (F)288 Vented Disc (R)288 Vented Disc, Weight(lbs): 2410.

4. Classify the Lotus Exige in T3.

Effective 11/1/08, add new spec line to TCS, p. 584, Lotus Elise (2005), Bore x Stroke(mm) / Displ.(cc): 82.0 x 85.0 / 1796, Wheelbase(mm): 2301, Wheel Size(in): 16 x 6.5 (F) 17 x 7.5 (R), Tire Size: 175/55 (F) or 195/50 (F) 225/45 (R), Gear Ratios: 3.12, 2.05, 1.48, 1.17, 0.96, 0.82, Final Drive: 4.53, Brakes(mm): (F)288 Vented Disc (R)288 Vented Disc, Weight(lbs): 2410.

ST

1. Chevrolet Corvette C6 Z06 (06-07), p. 586, **effective 11/1/08**, add to the Notes as follows: *Lingenfelter Performance Engineering thermostat #L310055204 permitted*.

COURT OF APPEALS

JUDGMENT OF THE COURT OF APPEALS
Jacek Mucha vs. SOM COA 08-13-NE
August 28. 2008

PRIOR PROCEEDINGS AND FACTS IN BRIEF

At the North American National race held at Mosport International Raceway, June 28-29, 2008, Jacek Mucha (Car #07, C/SR) was shown on the race results as a Did Not Finish (DNF), having completed only 8 of 19 laps in Race Group 4. Mr. Mucha protested the results, claiming that he had completed 9 laps. The Stewards of the Meeting (SOM), Bish Hines, Bob Thomas, A. G. Robbins and Roy Bergman, Chairman, met by phone conference and disallowed the protest, citing GCR 8.3.2.B.4. (Time limits to protest results of a competition). Mr. Mucha is appealing their decision.

DATES OF THE COURT

The National Court of Appeals (COA) Fred Cummings (Alternate), Dick Templeton and Robert Horansky, met on August 7 and August 14, 2008, to hear, review and render a decision on the appeal. David Nokes, regular member of the COA, was overseas and unavailable to participate.

DOCUMENTS AND OTHER EVIDENCE RECEIVED AND REVIEWED

1. Letter of Appeal from Jacek Mucha and accompanying documents, received July 29, 2008.
2. Official Observer's Report from Chairman, SOM, received July 29, 2008.
3. Emails from Marie Sheehe, Chief Timing and Scoring, Roy Bergman, Chairman, SOM, A. G. Robbins, SOM, Bob Thomas, SOM, Dean Croucher, Operating Steward for Race Group 4, Dave Perlman, Race Chairman, and Peter Klein, Chief Steward, received between August 4 and 9, 2008.
4. Copies of manual T&S lap charts received from Marie Sheehe, August 9, 2008.

FINDINGS

Mr. Mucha had a breakdown on course during his race in the Turn 5-6 area and was towed back to the pits by an Emergency Services tow vehicle. In defense of his filing of his protest at 6:02 pm (the official race results were posted at 3:50 pm), Mr. Mucha stated that the building where Timing and Scoring and other race officials are located was closed during the SCCA Group 5 race due to a medical emergency. In addition, he stated that the Timing and Scoring facility is located on the other side of the track from the paddock and the time to get from one area to the other is considerable.

Provisional race results were posted at approximately 3:20 pm, and became final at 3:50 pm. Mr. Mucha first contacted the Chief of Timing and Scoring about his issue between 30 and 60 minutes after the race results were official, per information received from the Chief of T&S, Marie Sheehe. She also confirmed to the COA that a comparison was made of both manual and the electronic systems charts before posting and all showed Car 07 had only completed 8 laps. Both provisional and final race results are posted outside the Timing and Scoring building and entry into the building is not required to view race results. The building also is accessible by a bridge over the track.

The SOM determined that the protest was not filed in a timely manner, nor were there any circumstances that fell within the provisions of GCR 8.3.2.B.7. (Time limit extension), and disallowed the protest.

DECISION

The Court of Appeals upholds the decision of the SOM. Mr. Mucha did not submit information to them or the COA that would cause a time period extension to file his protest. The results were available to him and all competitors in the usual place. He or a member of his crew merely needed to check the provisional results within the usual time period to determine if there were any problems. Mr. Mucha's appeal is not well founded and his appeal fee shall be retained by SCCA.

COURT OF APPEALS

JUDGMENT OF THE COURT OF APPEALS
Jonathan Pressman vs. SOM, COA Ref. No. 08-14-NE
September 1, 2008

FACTS IN BRIEF

At the Washington DC Region MARRS VI Regional Race at Summit Point Motorsports Park on Sunday, August 3, 2008, Michael Collins,

entrant of car SSM #56, driven by Ed York, filed a protest against Jonathan Pressman, driver of car SSM #87, citing violation of GCR Sections 6.8.1.A, B, and D (On Course Driver Conduct). The Stewards of the Meeting (SOM) John Nesbitt, Joe Willer, Tom Hoffman, and Steven Keadle, Chairman, heard testimony, reviewed witness statements, observed in-car videos, and upheld the protest. Mr. Pressman was penalized two positions in class and assessed three penalty points. Mr. Pressman is appealing that decision.

DATES OF THE COURT

The Court of Appeals (COA) David Nokes, Richard Templeton, and Robert Horansky, Chairman, met on August 21 and 28, 2008 to hear, review and render a decision on the appeal.

DOCUMENTS AND OTHER EVIDENCE RECEIVED AND REVIEWED

1. Letter of Appeal from Jonathan Pressman received August 17, 2008.
2. Official Observer's Report and related documents, received August 18, 2008.
3. Copies of videos reviewed by the SOM as well as a new video supplied by Mr. Pressman, received August 25, 2008.
4. Email statement from Steve Keadle, Chairman SOM, received August 25, 2008.
5. Email statement from John Nesbitt, SOM, received August 25, 2008
6. Email statement from Tom Hoffman, SOM, received August 25, 2008.

FINDINGS

In his appeal Mr. Pressman contended that Mr. York slowed unexpectedly and he was unable to brake soon enough to avoid contact with Mr. York's car.

All written reports and all videos, including Mr. Pressman's new evidence video from his car, confirmed the following scenario. During Lap 10 of the race Ed York, SSM #57, was in the lead going down the front straight heading into right hand Turn 1, followed by Jonathan Pressman SSM #87, and then Chris Windsor SSM #38. All three cars approached a slower lapped car holding the normal racing line on the left side of the track prior to the turn. Mr. York passed the slower vehicle on driver's right just before the turn, and immediately rejoined the racing line in front of the passed car. In doing so, he drove deeper into the corner, and set up for a slightly later apex at the turn. Mr. Pressman attempted an even later pass to the right of the lapped car and in doing so was unable to brake sufficiently to avoid contacting Mr. York's car in the right rear. Mr. Windsor, SSM #38, was unable to avoid the incident before him, and lightly contacted the rear of Mr. Pressman's car. Mr. York's car spun, lost positions in the race, and all vehicles continued.

DECISION

The Court of Appeals upholds the decision of the SOM in its entirety. Mr. Pressman's appeal is well founded and the appeal fee, less the administrative amount retained by SCCA will be returned.

COURT OF APPEALS

JUDGMENT OF THE COURT OF APPEALS
Giuseppe Evola vs. SOM, COA Ref. No. 08-15-SE
August 28, 2008

FACTS IN BRIEF

At The Daytona Double – Double SARRC Races at Daytona International Raceway on August 10, 2008, Bob Coward (SM #68) protested Giuseppe Evola (SM #62) for violating GCR 6.8.1. (On Course Driver Conduct – Racing room and passing). On the first lap of their race, contact between the cars of Mr. Coward and Mr. Evola in the Turn 7 chicane caused Mr. Coward to spin off course. Both cars continued. The Stewards of the Meeting (SOM) Norm Esau, Martyn Eastwood (SIT), and George Harper, Acting Chairman, conducted a hearing, reviewed the evidence, heard witnesses, and placed Mr. Evola on a six race weekend probation, which carries 3 automatic penalty points. Mr. Evola is appealing the decision and the severity of the penalty.

DATES OF THE COURT

The Court of Appeals (COA) Dick Templeton, David Nokes, and Robert Horansky, Chairman, met on August 28, 2008, to hear, review, and render a decision on the appeal.

DOCUMENTS AND OTHER EVIDENCE RECEIVED AND REVIEWED

1. Letter of Appeal from Giuseppe Evola, received August 22, 2008.
2. Official Observer's Report and related documents, received August 22, 2008.
3. Race Results, received August 22, 2008.
4. Email statement from SOM George (Smokey) Harper, received August 24, 2008.
5. Email statement from Chief Steward Leland Miller, received August 25, 2008.

FINDINGS

Mr. Evola acknowledges the contact between his car and Mr. Coward's car; and that the contact caused Mr. Coward to spin. He asserts that the contact was light and was incidental. However, the SOM found significant damage on the rear bumper of Mr. Coward's car and on the right front of Mr. Evola's car.

While the Court finds that the SOM acted properly in their investigation and process, it questions the penalty, as it is inconsistent not

only with other penalties imposed at that event, but also with the published Penalty Guidelines.

DECISION

The Court of Appeals upholds the SOM, but modifies the penalty. Mr. Evola is penalized two finishing positions, which carries an automatic penalty of 3 points. The Court finds that Mr. Evola's appeal is well founded and his appeal fee, less the amount retained by SCCA, will be returned.

SOLO EVENTS BOARD MINUTES

SOLO EVENTS BOARD |SPORTS CAR CLUB OF AMERICA, INC.| *Aug. 27, 2008*

The Solo Events Board met by conference call August 27th. Attending were SEB members Dave Whitworth, Tina Reeves, Steve Wynveen, Jason Isley, Erik Strelnieks, Chris Dorsey, Rick Myers, Ron Bauer, and Donnie Barnes; Lisa Noble, Bob Introne, and John Sheridan of the BOD; and Doug Gill, Howard Duncan, Brian Harmer, and Nancy Downing of the National Staff. These minutes are presented in topical order rather than the order discussed.

Unless noted otherwise the effective date for all rule, class, and listing change proposals herein is 1/1/2009.

RECOMMENDATIONS TO THE BOD

- The following previously-published items have been reviewed by the applicable subcommittees and the SEB, and are recommended to the BOD for an effective date of 1/1/2009:
  - ITEM 1) In Street Modified, rename SM2 to SSM (approved by the SMAC following publication for member feedback).
  - ITEM 2) In Street Prepared, add a new subsection 15.10.I, regarding radiators, as follows:

    "15.10.I Engine cooling radiators may be replaced with alternate parts subject to the following restrictions:

    1) Radiator core dimensions (width, height, thickness) must be no smaller than the standard part.
    2) Radiator must mount to OE radiator mounts.
    3) Fluid capacity /_and dry weight_/ of radiator must be no less than that of the standard part.

    Alternate radiators may serve no other purpose (e.g. to allow a cold air intake passage)."
  - ITEM 3) In Street Touring, rename STS to ST and STS2 to STS.

GENERAL

- SEB positions will be open at the end of 2008. Interested members are invited to submit their qualifications in writing to the SEB and BOD via the National Office.
- The SEB discussed a proposal for restructuring the Divisional and National Tour programs.
- Rick Myers has accepted a position with the National Office and will be stepping down from the SEB. The board thanks him for his service to the Club in this capacity.

STOCK

- Members are reminded that the previously-published concepts for Stock class re-organization are just that; preliminary concepts, published to elicit member input. No decisions regarding this type of action have been made.
- The SAC continues to seek feedback regarding the following, which introduces a concept for a rule change proposal which would be incorporated into the rule book effective 1/1/2010:

  "The committee is proposing a sunset rule for stock class cars. The rule book does not include a process where aging cars are retired. These cars usually have limited spare parts availability, spotty or non-existent documentation, and/or a general lack of availability. While they should remain eligible to compete, the SAC believes their eligibility for Divisionals, Tours, and the National Championships should be limited. The limitations would be as follows beginning 2010 and the cars will remain in Appendix A but will be notated as retired: 25 years from model year designation. (Example – a 1985 Corvette would be eligible to compete in contingency events through the 2010 season.)"

  NOTE: this proposal would only affect the Stock classes.

STREET TOURING

- The 2009 Mitsubishi Ralliart is under consideration for the STX exclusion list, but will still be eligible in 2009 for STU regardless.
- The STAC recognizes the performance potential of the new Cobalt SS Turbo and plans to gather more data for future discussion on classing. It should be noted that the SEB officially classed this car in the July 2008 Fastrack (Tech Bulletin #8).

STREET PREPARED

- Per the SPAC, the following class listing change proposals, with an effective date of 1/1/2010, are published here for member feedback:
- Consolidate the listings for the Honda Civic ('88-'91) and Honda CRX ('88-'91) onto one line in CSP. (ref. 08-331)
- Consolidate the listings for the Datsun 240Z, 260Z, 280Z, and 280ZX turbo onto a single line in BSP. (ref. 08-321)

- The SPAC is seeking member feedback on moving the following cars from CSP to DSP, effective 1/1/2010:

  Acura RSX (all)
  Audi Quattro (NOC)
  Mercedes 190 ('84-'93 all)

- The SPAC would like member feedback on the following potential moves of cars from DSP to FSP, effective 1/1/2010:

  Audi
    4000 (all)
    80 (all)
    90 (all)
  BMW
    318i/is (E30)
    318i/is & 318ti (E36)
    put 2002tii on same line as 2002/1602
  Volkswagen
    Golf/Jetta 16v (A2)
    Scirocco 16v
  Saturn
    SC1/SC2 16v
  Acura
    Integra ('86-'89)

NOT RECOMMENDED

- ST emissions proposal (ref. 08-325)
- ST oil pan proposal (ref. 08-457 and 08-458)
- ST fog light deletion (ref. 08-471)
- SP bumper covers (ref. 08-239)
- SP reclass, RX7TT to BSP. *Comment*: the SPAC believes this car has performance parameters which are a good fit for ASP.

TECH BULLETINS

1. Street Touring: Per the STAC, For the 2002-2007 Subaru WRX, the heat shield attached to the turbo is a turbo heat shield and not part of the exhaust, and is therefore not subject to 14.10.D.

2. Street Prepared: In reference to letter 08-432 pertaining to the installation of an air filter relocation kit and subsequent removal/modification of a plastic shroud, the SEB/SPAC does not see this as a legal modification.

   15.10.C.1 allows the replacement/modification of carburetors, fuel injection systems and intake manifolds, with some limitations. It also specifies that brackets that were utilized by the stock induction system may be removed if unbolted.

   15.10.E simply states "Air cleaner(s) may be changed or removed, velocity stacks may be added." The intake system in question is a "cold air kit," with a long tube to relocate the air cleaner ahead of the radiator. The tube may be considered a "velocity stack" or part of the "intake manifold." Either way, it is clearly an allowed replacement.

   However, on the NC MX-5 Miata, a plastic shroud (PN 56-181L) interferes with the routing of the tube; the plastic shroud is not an "air cleaner," nor is it part of the "intake system."

   Mazda calls this piece a "PLATE, SEAL-RAD. SHROUD." Mazda does not include it within the air-intake system in their factory documentation, and the (SEB/SPAC) agrees. It may well divert airflow in a manner which affects the stock airbox/air horn, but so does the bumper, radiator, etc.

   It is the SEB/SPAC's opinion that this piece may not be removed or modified to facilitate the installation of an intake kit.

3. Street Prepared: Per the SPAC, 15.10.C.4.e is clarified to read as follows:

   "e) Compressor bypass valves (CBVs) are considered part of the air intake system, and may be *added*, replaced or updated/ backdated independently of the other components of a forced induction system."

4. Street Prepared: The following new listings, effective immediately upon publication, have been recommended by the SPAC and approved by the SEB:

Chevrolet Cobalt SS naturally aspirated ('05-'07)	DSP
Chevrolet Cobalt SS supercharged ('05-'07)	DSP
Chevrolet Cobalt SS turbocharged ('08+)	DSP
HHR SS turbocharged	DSP
Nissan GTR	ASP (ref. 08-310)
Saturn Ion Redline	DSP (ref 08-334)
Volkswagen Jetta/Golf 1.8t (Mk4) ('99-'05)	DSP (ref 08-341)

QUICK LINKS

The following items have been removed from regular inclusion in FasTrack News and can be found on SCCA's Web site at the following links:

CLUB RACING

Accredited Driver Licensing Schools: http://www.scca.com/contentpage.aspx?content=39

Forms: http://www.scca.com/contentpage.aspx?content=45

Technical Forms: http://www.scca.com/contentpage.aspx?content=74

Scrutineer's Forms: http://www.scca.com/contentpage.aspx?content=77

Vehicle Homologation Forms: http://www.scca.com/contentpage.aspx?content=79

General Competition Rules (GCR): http://www.scca.com/contentpage.aspx?content=44

2008 Runoffs Home Page: http://www.scca.com/Runoffs

SOLO

Forms: http://www.scca.com/contentpage.aspx?content=60

Rulebook: http://www.scca.com/contentpage.aspx?content=61

2008 Tire Rack SCCA Solo National Championships: http://www.scca.com/event.aspx?hub=6&event=12143

RALLY

Forms: http://www.scca.com/contentpage.aspx?content=49

Rulebook: http://www.scca.com/contentpage.aspx?content=50

SCCA NATIONAL CONVENTION

Event page: http://www.scca.com/event.aspx?hub=6&event=11083

EVENT CALENDAR: http://www.scca.com/events.aspx?hub=10

Fastrack news official SCCA member notification

EFFECTIVE FIRST DAY OF THE COVER MONTH UNLESS OTHERWISE NOTED November 2008

CLUB RACING BOARD MINUTES

CLUB RACING BOARD | SPORTS CAR CLUB OF AMERICA, INC. | *Oct. 13, 2008*

The Club Racing Board met by e-mail on October 13, 2008. Participating were Bob Dowie, Chairman; Chris Albin, Stan Clayton, Dave Gomberg, Peter Keane, and Russ McHugh.

In addition to those items covered in Technical Bulletin 11-08, the following decisions were made:

SUBMITTED TO BoD FOR APPROVAL

The following subjects will be referred to the Board of Directors for approval. Address all comments, both for and against, to the Club Racing Board. Comments may be e-mailed to crb@scca.com.

CONTENTS

BOARD OF DIRECTORS	**NONE**
CLUB RACING	**1**
CRB Minutes	1
Technical Bulletin	4
COURT OF APPEALS	**5**
SOLO	**8**
SEB Minutes	8
RALLY	**NONE**
QUICK LINKS	**10**

Formula

Item 1. Effective 1/1/09: Revise section 9.1.1.D.2.s.10 as follows:

Exhaust outlets on cars registered after January 1,1986 shall not extend more than 60cm (23.60”) behind the centerline of the rear axle ~~and shall be positioned between 30mm (11.8”) and 60cm (23.6”) from the ground, measured to the bottom of the exhaust pipe~~.

Item 2. Effective 1/1/09: Delete 9.1.1.D.10.d as follows:

~~d. Wheel covers, wheel fans, or any device to fair in the wheel is prohibited.~~

Sports Racer

Item 1. Effective 1/1/09: Based on member input, to better balance the performance potential of different power-train configurations in CSR, delete section 9.1.9.A.2.a.6. DSR cars will still be welcome in CSR, but will have to run at the appropriate weight for their engine as classified in CSR.

~~Cars prepared to DSR specifications may compete in CSR at their current DSR weight.~~

Grand Touring

Item 1. Effective 1/1/09: Change section 9.1.2.F.4.b.12 as follows:

A spoiler may be fitted to the front of the car. It shall not protrude beyond the overall outline of the car as viewed from above except *as follows:*~~in GT2 where a front spoiler may extend up to two (2) inches~~.

- GT2 front spoiler may extend up to *3* inches.
- *GT3 front spoiler may extend up to 2 inches.*
- *GTLite front spoiler may extend up to 2 inches.*

In all classes, the spoiler shall not extend aft of the forward most part of the front fender opening (cutout), and shall not be mounted more than four (4) inches above the horizontal centerline of the front wheel hubs. The spoiler shall not cover the normal grill opening at the front of the car. An intermediate mounting device may be used on cars whose front bodywork is above the four (4) inch minimum. Openings are permitted for the purpose of ducting air to the brakes, radiator, airbox and/or oil cooler(s); equal openings may be placed in the standard lower front panel directly behind openings placed in the spoiler. When bumpers are retained, the spoiler and bumper shall appear to be two separate parts. The spoiler ”pan” area forward of the leading edge of the front wheel openings shall be flat and follow, but not exceed, the line of the front fender/spoiler bottom.

Item 2. Effective 1/1/09: Add new subsection 14 to section 9.1.2.F.4.b as follows:

14. GTL Wing Rules

A. The maximum width of the entire single element, flat plane wing assembly is 56.0 inches, but it may be no wider than the bodywork including fender flairs. The maximum chord is 8.0 inches. Wing endplates must fit within a rectangle measuring 8.5 inches wide by 3.0 inches high. Endplates must be flat, with no curvature or Gurney tabs. A maximum 0.5-inch wicker-bill may be employed.

B. The wing shall be mounted to the trunk/deck lid with two brackets. Each mounting bracket shall attach to the wing at least 2.0 inches inboard of the endplates. The brackets may protrude through the trunk/deck lid to allow the brackets to be fastened together beneath the lid.

C. The wing shall be mounted a minimum of 6.0 inches below the highest point of the roof as measured between the highest points of the roof and the wing.

D. The trailing edge of the wing assembly must be located between 6.0 inches forward of the rearmost bodywork and the rearmost bodywork as measured along the vehicle longitudinal centerline.

E. Cars with a wagon or hatch back style body must have the entire wing positioned between 6.0 and 28.0 inches of the rearmost bodywork as measured along the vehicle longitudinal centerline, and a maximum of 4.0 inches above the highest point of the roof.

A wagon-back style body is a car in which the rear edge of the roofline is no more than 28.0 inches forward of the rearmost bodywork as measured along the vehicle longitudinal centerline.

Spec Miata

Item 1. Effective 1/1/09: Change section 9.1.8.C as follows:

The following items represent the only modifications and safety items permitted and/or required on Spec Miata automobiles other than safety items as required in Section 9. No permitted component/modification shall additionally perform a prohibited function. No updating or backdating of cars, models, specifications, and/or components thereof shall be permitted except as specifically authorized in these specifications.

A Shop Manual for the specific make, model, and year of automobile is required to be in the possession of each entrant. The manual is intended to aid Scrutineers in identifying parts and the configuration of the automobile.

~~All adjustments shall be at the manufacturer's specification and/or within the manufacturer's specified tolerances except as permitted within the SMCS.~~

~~Stock replacement parts may be obtained from sources other than the manufacturer provided they are the exact equivalent of the original parts. The intent of this rule is to allow the competitor to obtain replacement parts from standard industry outlets, e.g., auto parts distributors, rather than from the manufacturer. It is not intended to allow parts that do not meet all dimensional and material specifications of new parts from the manufacturer.~~

All engines and internal components used in rebuilding or refurbishment must have been offered for sale by Mazda in the US for the correct year and VIN of car, except as otherwise provided for in these rules. The intent of this rule is to prohibit aftermarket parts or Mazda parts of incorrect specification or application.

Assembly, rebuild, and refurbishment procedures, and all associated dimensions, shall adhere to the published factory service procedures, except as otherwise provided for by these rules. No components may be added or omitted from those specified by the published factory service procedures. All components must be standard dimensions.

Any water pump and timing belt of original equipment manufacture design, dimensions, and specification may be used.

The application and/or use of any painting, coating, plating, or impregnating substance (~~i.e.~~ *e.g.,* anti-friction, thermal barrier, oil shedding coatings, chrome, anodizing, etc.) to any internal engine surface, transmission, differential, internal or external surfaces of the exhaust manifold or downtube~~,~~ is prohibited.

Item 2. Effective 1/1/09: Change section 9.1.8.C.4.b as follows:

All cars may use the *Fat Cat Motorsports bump stop kit (p/n FCM-MT-KIT-SM) or the* unmodified Mazdaspeed bump stop (p/n 0000-04-5993AW) in conjunction with the 1999-up stock upper mount assembly consisting of the upper mount (p/n: NC10-28-340C), the upper mount bushing (p/n: NC10-28-776) and the upper mount washer (p/n: NC10-28-774), *and shock body spacer over the shock shaft (p/n 1234-56-789-AW).* All other OEM upper mounting hardware shall be discarded. *Non-OEM equivalents may be used in place of the upper mount, upper mount bushing, and upper mount washer only. No other modifications are allowed.*

A metal or delrin plastic spacer as shown below may be added between the Mazdaspeed bump stop and the 1999 shock hat. The 0.31 inch measurement is +/- 0.01 in. All other measurements are non-critical and are shown for clarification purposes only. *In addition, a 3/8 inch steel hardware washer may be installed between the shock shaft and the bump stop. The washer shall be a maximum of 1/8 inch thick.*

Item 3. Effective 1/1/09: Change section 9.1.8.C.6.o as follows:

o. Tires -

~~1. National Competition~~

All cars shall use ~~the~~ Toyo ~~Proxes RA-1~~ *R888* (205/50R15).

~~2. Regional Competition~~

~~Any DOT approved tire is permitted. Racing, recapped, or regrooved tires are not allowed. Tire size is unrestricted. The only modifications allowed to tires are having treads "shaved" or "trued." Individual regions may require spec tires for regional races. Supplemental regulations for specific events should be checked.~~

RECOMMENDATIONS TO THE BoD

None

MEMBER ADVISORIES

1. CSR/DSR - The CRB invites input from the sports racing community about whether to continue to permit turbo/supercharging in the classes and under what restrictions, if any.

2. SM - The CRB invites input from the SM community to comment if it would be desirable to allow the 1990-93 1.6 liter cars to run a lighter flywheel to achieve class parity.

NEW CAR CLASSIFICATIONS

None

REFERRED or TABLED

None

Previously Addressed

None

No Action Required

None

Resumes

None

CLUB RACING TECHNICAL BULLETIN

DATE: October 7, 2008
NUMBER: TB 08-11
FROM: Club Racing Board
TO: Competitors, Stewards, and Scrutineers
SUBJECT: Errors and Omissions, Competition Adjustments, Clarifications, and Classifications.

All changes are effective 11/1/08 unless otherwise noted.

Formula
FC

1. Clarify section 9.1.1.B.3.a by removing the second to last sentence as follows: ~~Maximum valve lift against cam angle with zero tappet clearance: 0.400 +/- 0.005.~~
2. Clarify section 9.1.1.B.3.i by adding to the beginning of the paragraph as follows: *Regrinding camshaft lobes is permitted, as long as the camshaft lobe center is* $112^{o} \pm 2^{o}$.

Sports Racer
S2

1. Clarify section 9.1.9.B.5.a by as follows: ~~Maximum valve lift against cam angle with zero tappet clearance: 0.400 +/- 0.005.~~
2. Clarify section 9.1.9.B.5.a by adding to the beginning of the paragraph as follows: *Regrinding camshaft lobes is permitted, as long as the camshaft lobe center is* $112^{o} \pm 2^{o}$.

COURT OF APPEALS

JUDGMENT OF THE COURT OF APPEALS
Charles Cobbs vs. SOM, COA Ref. No. 08-16-SE
September 25, 2008

FACTS IN BRIEF
At the Alabama and Atlanta Regions' Labor Day Double SARRC / Pro-IT Regional Race held at Barber Motorsports Road Course on Saturday August 30, 2008, Robert Bitterman, driver of car ITB #21 filed a mechanical protest after qualifying against Charles Cobbs, driver of car ITB #93, citing violation of GCR Sections 9.1.3.D. (Authorized Modifications to Improved Touring cars). Mr. Bitterman stated the removal of the front and rear bumpers on Mr. Cobbs' 1974 Alfa Romeo GTV was not an allowable modification. The Stewards of the Meet (SOM) Geoff Churchill, Paul Gauzens (Steward in Training) and Russ Smith, Chairman, heard testimony, inspected Mr. Cobbs' vehicle and upheld the protest. Mr. Cobbs chose not to bring his vehicle into compliance and did not start any of the races for the weekend. Mr. Cobbs is appealing the non-compliance decision.

DATES OF THE COURT
The Court of Appeals (COA) Richard Templeton, Fred Cummings (Alternate) and Robert Horansky, Chairman, met on September 18, 2008 to hear, review and render a decision on the appeal. David Nokes, regular Court member was out of the country and unavailable for this meeting.

DOCUMENTS AND OTHER EVIDENCE RECEIVED AND REVIEWED
1. Letter of Appeal from Charles Cobbs received September 12, 2008.
2. Official Observer's Report and related documents, received September 12, 2008.
3. Email statements from Russ Smith, Chairman SOM, received September 15 and 16, 2008.
4. Email statement, including photos of Mr. Cobbs' vehicle, from SOM Geoff Churchill received September 13, 2008.
6. Email statement from Gwen Jackson, pre-event Registrar, received September 16, 2008.

FINDINGS
In his appeal Mr. Cobbs contended that he has run his car in ITB for four years in this configuration. He provided pictures of GTV race vehicles without bumpers; many of the photos were not SCCA racing vehicles. The COA determined that none of the photos provided showed Improved Touring class designations.

The GCR is clear in specifying that Improved Touring is a restricted class. No component or part normally found on a stock example of a given vehicle may be removed unless specified in the authorized modifications. There is no statement allowing removal of bumpers in any sections of GCR 9.1.3.D.

DECISION
The Court of Appeals upholds the decision of the SOM in its entirety. Mr. Cobbs' appeal is not well founded and his appeal fee will be retained by SCCA.

COURT OF APPEALS

Judgment of the Court of Appeals
William Emery vs. SOM, COA Reference 08-17-NE
October 5, 2008

PRIOR PROCEEDINGS AND FACTS IN BRIEF
During the WOR Games held August 30-31, 2008 at Nelson Ledges, Assistant Chief Steward Barry Kaplan filed a Request For Action (RFA) against William Emery, driver of EP # 91, for violations of GCR 6.8.1.A, B, and C (On Course Driver Conduct) as well as GCR 6.11.2 (Meaning of Flags). The Stewards of the Meet (SOM) listed as John Pfetzing, John Baker and John Peterson, Chairman, met, reviewed evidence, took testimony and assessed a penalty of 6 months suspension followed by Mr. Emery being required to go through Driver's School prior to reinstatement of his license. Subsequently, Debra LaFond, Chief Steward, filed a Chief Steward's Action (CSA) prohibiting Mr. Emery from competing in Sunday's race citing GCR 5.12.2.B.5 (Chief Steward's Power to Prevent Dangerous Car or Driver from Competing). Mr. Emery is appealing those decisions.

DATES OF THE COURT
The Court of Appeals (COA), JoAnne Jensen (Alternate), Dick Templeton, and Robert Horansky, Chairman, met on September 18, 25, and October 5, 2008 to hear, review and render a decision on the appeal. David Nokes, regular Court member was unavailable for these meetings.

DOCUMENTS AND OTHER EVIDENCE RECEIVED AND REVIEWED
1. Appeal from William Emery and accompanying documents.
2. Official Observer's Report and related documents including numerous witness statements, the race log, and Official Results.
3. Email from Barry Kaplan dated September 16, 2008.

4. Email from John Peterson dated September 19, 2008.
5. Email from William Emery to Terry Ozment forwarded to the COA on September 23, 2008.
6. Video from Daniel Styduhar, mechanic and crew member for Mr. Emery, received September 29, 2008.

FINDINGS

During Race Group 3A, cars 56 and 17 running first and second in class began to lap car 91 as they approached Start/Finish. Emergency vehicles were being dispatched from just past Start/Finish at the same time. There is confusion among the witnesses as to what flags were being displayed. The Starter testified that a blue flag was displayed, others saw white flags, yellow flags or a combination of all three.

Car 91 (Mr. Emery), which was slow prior to Start/Finish, slowed even more and moved slightly left. Car 56 attempted to pass #91 on the right and #17 elected to go left. Car 91 moved back to the right to allow # 17 racing room and was hit in his right rear by car 56. Car 56 spun into the tire wall which created a full course blockage that led to a red flag situation.

Mr. Emery admitted that he continued around the course and came upon red flags at several corners prior to coming to a stop.

Mr. Styduhar's video was irrelevant, and provided no new evidence in this matter.

DECISION

The Court of Appeals amends the decision of the SOM as follows: Mr. Emery's license suspension and driver's school attendance requirement are to be expunged and the 6 penalty points assessed him removed from his record. Instead, Mr. Emery is disqualified from the event and placed on probation for nine (9) race weekends. The COA was unable to act on the CSA, as Mr. Emery did not exercise his right to protest that action. The disqualification will add 4 penalty points to his record. Mr. Emery's appeal is well founded and his appeal fee, less the amount retained by SCCA, will be returned.

COURT OF APPEALS

JUDGEMENT OF THE COURT OF APPEALS
Chris Windsor vs. SOM COA 08-16-NE
October 5, 2008

PRIOR PROCEEDINGS AND FACTS IN BRIEF

At the Washington D.C. Region MARRS 7 Regional Race at Summit Point Motorsports Park on September 1, 2008, Chris Windsor, driver of SSM #38, filed a protest against Ed York, driver of SSM #56, citing violation of GCR Paragraph 6.8.1.A (On Course Driver Conduct, Avoiding Contact). Chris Windsor alleged that Ed York made contact with him twice during the last lap of the race. The Stewards of The Meet (SOM) Dave Gomberg, Kathy McLeod, Joe Willer, and Earl Hurlbut, Chairman, heard testimony from both drivers, viewed videos, inspected the cars, and disallowed the protest. Mr. Windsor is appealing that decision

DATES OF THE COURT

The Court of Appeals (COA), comprised of Dave Nokes, Dick Templeton, and Bob Horansky, Chairman, met on September 25 and October 5, 2008, to review the First Court's decision.

DOCUMENTS AND OTHER EVIDENCE RECEIVED AND REVIEWED

1. Appeal E-Mail copy from Chris Windsor, received September 17, 2008.
2. Observers Report and related documents received September 17, 2008.
3. Copies of the Windsor video and one from Car #16 (Kevin Kopp, Driver) received September 23, 2008.

FINDINGS

Chris Windsor contends that the contact between his car and that of Ed York occurred twice on the last lap between Turns 9 and 10, causing him to lift, and lose position and the win. The SOM viewed the videos from Chris Windsor's car and one from Car #16 which was the third place car following Mr. Windsor and Mr. York. There was no entry in the race log regarding any contact, nor were there any corner station or spectator witnesses. The SOM could not find any damage on either vehicle that could be tied to this contact. In his witness statement, Mr. York admits to contact as he attempted a pass to the right of Mr. Windsor at Turn 9, claiming Mr. Windsor moved over into him. Mr. York claims he backed off and followed Mr. Windsor into Turn 10. He then claims Mr. Windsor slowed and he was able to execute the pass to the right.

DECISION

The Court of Appeals upholds the First Court. Mr. Windsor did not provide any new evidence. Mr. Windsor's appeal is not well founded and his appeal fee will be retained by SCCA.

COURT OF APPEALS - RULES INTERPRETATION

JUDGMENT OF THE COURT OF APPEALS
RULES INTERPRETATION: FC CRANKCASE INTERIOR SURFACE AND PISTON LOWER SURFACE MODICIFACTION
COA 08-04-RI
September 25, 2008

FACTS IN BRIEF
Arthur E. Smith filed a request for a Rules interpretation (GCR 8.1.4.) on June 20, 2008. The Chairman of the Steward's Program appointed a First Court consisting of Robert Eddy, Steve Harris, Barbara Knox and Gary Meeker, Chairman, to review and make a decision on his request. The First Court met by conference calls, reviewed the evidence supplied by Mr. Smith and consulted with other individuals before reaching their conclusion. The First Court did not consult with the Club Racing Board.

Mr. Smith requested that two questions be reviewed:

1. "Is the modification of the inner surface of a [Formula Continental] crankcase (specifically excluding the main caps) compliant with the GCR as currently written given the crankcase (and the oil/dry sump pan) ***exists solely*** (emphasis supplied) to perform the critical lubrication system functions of containment and collection of oil that has escaped pressure fed journal bearings and/or the flood lubrication of the camshaft and its followers?"

2. "Is the modification of the lower surface of the four pistons also compliant with the GCR as currently written given the lower surface ***exists solely*** (emphasis supplied) to perform the critical lubrication system function of containment of oil that has escaped pressure fed journal bearings and/or the flood lubrication of the camshaft and its followers?"

The First Court, after their extensive review, determined that modifying neither the crankcase nor the pistons as requested is permitted under the current GCR rules for Formula Continental contained in GCR 9.1.1. B.3., or B.4.

DATES OF THE COURT
The National Court of Appeals (COA), JoAnne Jensen (Alternate), Dick Templeton and Robert Horansky, Chairman, met on September 11, 18 and 25, 2008, to review and render a decision. Regular member David Nokes was unavailable to participate.

DOCUMENTS AND OTHER EVIDENCE RECEIVED AND REVIEWED
1. Original request letter from Mr. Smith dated June 20, 2008.
2. Findings of the First Court, received September 3, 2008.
3. Email from Dave Gomberg, member Club Racing Board, received September 18, 2008.
4. Copy of email from Deanna Flanagan, Club Racing Manager, SCCA, Inc., advising Mr. Smith of the Decision of the First Court, dated September 5, 2008.
5. Copy of email from Mr. Smith to Deanna Flanagan, requesting that the second step - hearing by the Court of Appeals - be completed, dated September 13, 2008.

FINDINGS
With regard to Mr. Smith's first question regarding the crankcase, the COA finds that the crankcase does not exist solely to perform lubrication system functions. The crankcase provides structural functions, such as locating and supporting the crank, rod and piston assembly, cooling functions, as well as lubrication functions. It is not permissible to choose just one of those functions as justification for the modification in question.

As to Mr. Smith's second question regarding the lower surface of the piston, it is clear that pistons perform several functions other than oil containment, and the underside of a piston can not be separated from the rest of the piston. The provisions of GCR 9.1.1.B.3. D., 9.1.1.B.3. F., and 9.1.1.3.B.4., b., c., and d. state the permitted modifications to pistons, which do not include anything with regard to the lubrication system.

DECISION
The Court of Appeals agrees with the Decision reached by the First Court. Mr. Smith's request for an agreement with his interpretation of the GCR rules cited previously is rejected.

SOLO EVENTS BOARD MINUTES

SOLO EVENTS BOARD |SPORTS CAR CLUB OF AMERICA, INC.| *Sept. 24, 2008*

SOLO EVENTS BOARD

The Solo Events Board met by conference call September 24th. Attending were SEB members Dave Whitworth, Tina Reeves, Steve Wynveen, Jason Isley, Erik Strelnieks, Chris Dorsey, Ron Bauer, and Donnie Barnes; Lisa Noble and Bob Introne of the BOD; and Doug Gill, Howard Duncan, and Brian Harmer of the National Staff. These minutes are presented in topical order rather than the order discussed.

Unless noted otherwise the effective date for all rule, class, and listing change proposals herein is 1/1/2010.

GENERAL

- SEB positions will be open at the end of 2008. Interested members are invited to submit their qualifications in writing to the SEB and BOD via the National Office.
- The following Divisions will have openings at the Divisional Solo Event Steward position for 2009: Central, Great Lakes, Midwest, and Southeast.
- Committee position openings are anticipated in various category-specialty subcommittees (e.g. SAC, SPAC, MAC, etc.). Interested members are invited to submit their qualifications in writing to the SEB via the National Office.
- The SEB approved the distribution of a post-Solo-Nationals survey to event participants.
- No decision has been made at this time regarding the location of the 2009 Solo Nationals.
- Nominations are requested for the Rookie of the Year, Driver of the Year, and Divisional of the Year awards. Descriptions of these awards are found in Appendix V of the Solo rule book.
- Vern Maxey will be stepping down from the MidDiv Solo Events Steward position, and the SEB thanks him for his service to the Club.
- Heyward Wagner will be stepping down as the SEDiv Solo Events Steward. The SEB thanks Heyward for his service to the Club.
- Jason Tipple will be stepping down as the GLDiv Solo Events Steward. The SEB thanks Jason for his service to the Club.
- The rules package forwarded by the SEB to the BOD, which was approved at the BOD's September meeting was in error. Specifically, under the STOCK CATEGORY heading, Item 8 is incorrect. The correct wording, is as follows:

  ITEM 8)

  Move from DS to GS: Chevrolet Cobalt SS Supercharged

  Move from GS to HS: Honda Civic del Sol VTEC

  This was simply a clerical oversight, and the SEB apologizes for any distress this may have caused the membership.

STOCK

- The SAC has submitted the following rule change proposal for member feedback: Add to 13.0, at the end of the first paragraph: "A Canadian-market vehicle is legal for Stock competition if it is identical to the US counterpart except for the allowed comfort and convenience modifications."
- The SAC is revising its previously-published 2010 class structure reorganization proposal (published as "Option 1") to remove the portion which splits CS and moves Miatas to ES.
- Per the SAC, the following class change proposal is published for member feedback: Move the Mini Cooper S from GS to DS.
- At this time the SAC withdraws the follwing previously published class change proposals:
  - Cobalt SS Turbocharged - DS to GS
  - Mazdaspeed 3 - DS to GS
  - Integra Type R - DS to BS
  - Lotus Elise SC - Exclusion List to SS
  - Dodge Viper 08+ - Exclusion List to SS
  - Lotus Exige S - Exclusion List to SS
  - Porsche 996 Turbo - Exclusion List to SS

NOT RECOMMENDED

- MR2 wheels in Stock (ref. 08-493) The SAC would like to maintain a consistent rule set across the entire category, without exceptions for individual models or years. Stock wheel size is a basic tenet of the stock category. See 13.4 first paragraph.
- Noble kit cars in Stock (ref. 08-522) Per SAC: This is a kit car—customizable on customer request including any engine.

- Saleen Focus in Stock (ref. 08-530) Per SAC: Saleen currently has OEM status. However, when the S121 Focus was built, Saleen was not a recognized OEM. Not enough cars were built to meet the Stock production guidelines.

TECH BULLETINS

1. Stock: Per the SAC, add to the end of the second paragraph of 13.10.E: "Removal of a portion of the stock exhaust can be considered a substitution. The resulting cat-back exhaust system is not required to exit in the stock location. However, the requirements of section 3.3.3.B.15, and 3.5 must still be met." (ref. 08-539)
2. Stock: Per the SAC, add to the end of 13.5.A.2: "Aftermarket strut housings are allowed, provided that they meet the Stock category shock requirements defined herein, i.e. that no suspension geometry changes result. This includes the position of the steering arm in the case of struts with integrated steering arms."
3. Stock: The following new listing, effective immediately upon publication, has been recommended by the SAC and approved by the SEB:

   Mercedes C63 AMG SS (ref. 08-410)

QUICK LINKS

The following items have been removed from regular inclusion in FasTrack News and can be found on SCCA's Web site at the following links:

CLUB RACING

Accredited Driver Licensing Schools: http://www.scca.com/contentpage.aspx?content=39

Forms: http://www.scca.com/contentpage.aspx?content=45

Technical Forms: http://www.scca.com/contentpage.aspx?content=74

Scrutineer's Forms: http://www.scca.com/contentpage.aspx?content=77

Vehicle Homologation Forms: http://www.scca.com/contentpage.aspx?content=79

General Competition Rules (GCR): http://www.scca.com/contentpage.aspx?content=44

SOLO

Forms: http://www.scca.com/contentpage.aspx?content=60

Rulebook: http://www.scca.com/contentpage.aspx?content=61

RALLY

Forms: http://www.scca.com/contentpage.aspx?content=49

Rulebook: http://www.scca.com/contentpage.aspx?content=50

SCCA NATIONAL CONVENTION

Event page: http://www.scca.com/event.aspx?hub=6&event=11083

EVENT CALENDAR: http://www.scca.com/events.aspx?hub=10

Fastrack news official SCCA member notification

EFFECTIVE FIRST DAY OF THE COVER MONTH UNLESS OTHERWISE NOTED December 2008

BOARD OF DIRECTORS MINUTES

BOARD OF DIRECTORS' MINUTES | SPORTS CAR CLUB OF AMERICA, INC. | *November 10, 2008*

The Board of Directors, Sports Car Club of America, Inc. met via teleconference November 10, 2008. The following members participated: R. J. Gordy, Chairman, Howard Allen, Jim Christian, Philip Creighton, Larry Dent, Bob Lybarger, Lisa Noble, Andy Porterfield, John Sheridan, Mike Sauce, K.P. Jones and Jerry Wannarka. Jim Julow President, and Jeff Dahnert, Vice President of Finance, also participated.

MOTION: To approve the minutes of the September 5, 2008 meeting. (Sauce/Porterfield) PASSED, Voting No, Dent. Absent, Introne

PRESIDENTS REPORT

Jim Julow reported on activities related to the 2009 budget process.

TREASURERS REPORT

Jeff Dahnert reported on financials through September 2008.

OLD BUSINESS

None

NEW BUSINESS

MOTION: To approve the following Executive Stewards for 2009. (Lybarger/Sheridan) PASSED Unanimous, Absent, Introne

NorPac	Gary Meeker
SoPac	Barbara Knox
Great Lakes	John Peterson
R Mtn	Anne Christian
Central	Mike Engelke
MidDiv	Robert Eddy
SW	Tom Brown
SE	Rick Mitchell
NE	Tom Hoffman

MOTION: To grant Southern Pacific Division a waiver of the provisions of GCR Section 3.2.2.j to allow them to conduct a Drivers School/National Race on the same date as the 2009 National Convention. (Porterfield/Dent) PASSED Voting NO, Jones, Absent, Introne

MOTION: To approve the following changes to the GCR for 2009, as submitted by the Club Racing Board. (Christian/Dent) PASSED Unanimous, Absent, Introne

GCR

Item 1. Effective 11/1/08: Add new section 9 to section 9.4.5.E as follows: Cars may compete with FIA homologated cages provided the cage was built by the manufacturer or a manufacturer-designated shop/team and approved for use. Item 2. Effective 11/1/08: Change section 8.3.3.A.5 as follows: In the event of a protest involving verification of *components and/or assemblies* ~~camshaft specifications~~, SCCA Club Racing Technical Services offers verification services for protest and/or compliance resolution according to the following requirements:

a. A complete description of the vehicle/engine combination should be included (~~i.e.~~ *e.g.,* make, model, year, VIN #, engine code, displacement, etc.).

CONTENTS

BOARD OF DIRECTORS	**1**
Board of Directors Minutes	1
CLUB RACING	**5**
CRB Minutes	5
Technical Bulletin	13
COURT OF APPEALS	**16**
SOLO	**21**
SEB Minutes	21
RALLY	**23**
RoadRally Board Minutes	23
RallyCross Board Minutes	NONE
RallyCross Board Memo	25
QUICK LINKS	**26**

b. A known stock example of the *part*~~-camshaft~~ in question must be included with the protested *part*~~-camshaft~~. The sample *part*~~-cam~~ must be of the same make, model and year of the protested *part*~~-camshaft~~.
c. An accurate description of the intake and exhaust valve arrangement relative ~~to the #1 cylinder is required (i.e., EX / IN, EX / IN, EX / IN, EX / IN).~~
d. The engine firing order and crankshaft rotation direction is required. NOTE: ~~For camshaft testing purposes, crank shaft rotation is determined by looking at the front of the engine, NOT from the driver's seat.~~

c ~~e~~. The cost for *the inspection will be set according to the Club Racing Labor Rate Guide, published on the SCCA website.* ~~each camshaft test is $100.~~ Provisions for shipping to and from the national office should be included in the bond.
d ~~f~~. Upon receipt of the above information and samples, a complete ~~camshaft~~ comparison will be produced within 5 working days. This information will be conveyed to the Chairman SOM directly via ~~fax or~~ email.

Item 3. Effective 11/1/08: Change the lower illustration following section 9.3.18.H as follows: ~~4~~ 6" *max* at guide or anchorage - when using a head and neck restraint, follow the manufacturer's recommendation.

Grand Touring
Item 1. Effective 11/1/08: Change section 9.1.2.D.8.2.E. as follows: *A* ~~Unmodified~~ single element, *single plane* ~~Liebeck~~ airfoil ~~#1LD104E~~ scaled to a chord length of 10.75 inches *is permitted*. ~~The maximum cross sectional tolerance of the wing profile is 0.060 inch.~~

Item 2. Effective 11/1/08: Change section 9.1.2.F.4.b.13.E. as follows: *A* ~~Unmodified~~ single element, *single plane* ~~Liebeck~~ airfoil ~~#1LD104E~~ scaled to a chord length of 10.75 inches *is permitted*. ~~The maximum cross sectional tolerance of the wing profile is 0.060 inch.~~

Formula
Item 1. Effective 11/1/08: Remove section 9.1.9.C.5.e in its entirety:
~~e. It will be required that all cars display the following:~~
~~1. The SCCA field logo on the front and both sides of the car.~~
~~2. Four (4) inch high "SRF" class designation on both sides.~~
~~3. Official tire manufacturer's decals per C.23.f.~~
~~4. Official brake pad manufacturer's decal on both sides of the car if required by SCCA Enterprises.~~

Item 2. Effective 11/1/08: Remove section 9.1.9.C.23.f in its entirety:
f. All cars shall display three (3) official Goodyear tire decals in the following locations: One (1) decal on the nose forward of the radiator outlets. One (1) large decal on each side of the vehicle on the vertical portion of the bodywork. All other tire decals shall be removed. All cars shall display three (3) official Ford decals in the following locations: One (1) large decal on each side of engine cover. One (1) small decal on nose section visible from directly in front of vehicle.

Prepared
Item 1. Effective 11/1/08: Add the following sentence section 9.1.4.E.3:
Engines may be bored to a maximum of .040 inch over standard bore size.

Item 2. Effective 11/1/08: Change section 9.1.4.E.15 as follows: The intake and exhaust ports may be ported*, unless otherwise noted*. The valve guide may be machined as part of this porting. *The intake manifold may be port matched to the head(s), provided no material is removed further than one inch in from the manifold to head mounting surface(s).*

Item 3. Effective 11/1/08: Add the following paragraph to section 9.1.4.E.18:
Unless otherwise noted, the follow restrictions apply to turbochargers. Turbocharging is permitted only with a factory turbo/engine combination. The inlet restrictor (if required) shall be positioned in the compressor inlet housing. Turbochargers may not be added to engines that did not originally come equipped with one. Swapping of turbochargers between engine makes and models is prohibited. Supercharged cars may be approved on a case-by-case basis. Contact the Club Racing Technical Office for details.

Item 4. Effective 11/1/08: Add the following sentence to section 9.1.4.F.3:
The number, type, and location of intercoolers are free.

Item 5. Effective 11/1/08: Add new subsection 3 to section 9.1.4.H as follows:
3. Cars with sequential shift transmissions shall increase the required minimum weight by 100 lbs.

Item 6. Effective 11/1/08: Add the following sentence to section 9.1.4.L.9:
Cars with live axle RWD may reduce the minimum weight by 50 lbs.

Item 7. Effective 11/1/08: Add new subsection 16 to section 9.1.4.L as follows:
16. Front wheel drive cars may reduce their minimum weight by 50 lbs. Front wheel drive cars with a strut type front suspension may reduce their minimum weight by an additional 50 lbs.

Item 8. Effective 11/1/08: Delete section 9.1.4.1.A.3.f in its entirety:

~~f. Weight Requirements All cars shall meet the required minimum weight of 3100 lbs. Cars with sequential shift transmissions shall meet the required minimum weight of 3200 lbs.~~

Item 9. Effective 11/1/08: Replace section 9.1.4.1.B.1 as follows:

~~1. Intake Requirements~~

~~a. All cars shall use a Single Inlet Restrictor system as defined in Appendix B, unless noted ootherwise.~~

~~b. The following restrictors shall be used: 2 valve engine -42mm SIR 4 or more valve engine -40mm SIR Rotary engine -44mm SIR~~

~~c. Supercharging/Turbocharging is permitted with an SIR as listed above. The SIR shall be positioned upstream of the compressor inlet.~~

~~d. Carburetors are permitted with an SIR as listed above.~~

1. Intake Requirements: All cars shall use the stock or approved air metering device (e.g., carburetor, throttle body, etc.) and intake manifold for the installed engine, unless noted otherwise.

Item 10. Effective 11/1/08: Add new subsection F to section 9.1.4.1 as follows: The following car and engine combinations are approved in BP. Contact the Club Racing Technical Office to add additional cars.

BP	Engine Displacement	Minimum Weight	Restrictor	Notes
Cadillac CTS-V	6000	3300		
Chevrolet Corvette	5700	3135		
Chevrolet Corvette	6000	3300		
Chevrolet Camaro	5700	3135		
Chevrolet Camaro	5000	2750		
Dodge Viper	8000	3135	60mm Flat Plate	
Dodge Viper	8300	3300	60mm Flat Plate	
Dodge Neon SRT-4	2400	3000		Alternate turbo permitted
Ford Mustang	5800	3190		
Ford Mustang	5400	2970		
Ford Mustang	5000	2750		
Ford Mustang	4600	2530		
Mitsubishi/DSM	2000	3000		Alternate turbo permitted
Mitsubishi/DSM	2400	3000		Alternate turbo permitted
Pontiac GTO	6000	3300		
Pontiac GTO	5700	3135		
Pontiac Solstice	2000	3000		Alternate turbo permitted
Porsche 996	3600	2808		
Porsche 997	3600	2808		
Saleen SR	5800	3190		

Item 11. Effective 11/1/08: Delete section 9.1.4.2.A.4 in its entirety:

~~4. Weight Requirements All cars shall meet the required minimum weight *of 2700 lbs. Cars with sequential shift transmissions shall meet the required minimum weight of 2800 lbs.*~~

Item 12. Effective 11/1/08: Replace section 9.1.4.2.B as follows:

~~B. Engine/Intake Requirements~~

~~1. Engines up to 3000 cubic centimeters are permitted.~~

~~2. Intake Requirements All cars shall use a Single Inlet Restrictor system as defined in section Appendix B, *unless noted oth*~~

~~*erwise.*~~

~~*3.* The following restrictors shall be used: 2 valve engine- *31mm SIR* 4 valve engine- *30mm SIR* Rotary engine- *33mm SIR*~~

~~*4.* Turbocharging/Supercharging is permitted with an SIR as listed above, and shall use the factory original unit (no aftermarket turbo/superchargers). The SIR shall be positioned upstream of the compressor inlet. Factory turbo/superchargers may not be converted to models that did not originally come equipped with forced induction. Swapping of turbo/superchargers between makes and models is prohibited.~~

B. Engine/Intake and Weight Requirements

1. Engines up to six cylinders and 3000 cubic centimeters factory displacement are permitted.

2. Intake requirements. All cars shall use the installed engine's stock air metering device (e.g., throttle body) and intake manifold, unless noted otherwise.

3. Minimum weights for cars with normally aspirated piston engines will be determined by 1.1 lbs/cc displacement for the installed engine (see following table). Displacement is determined by the factory displacement for the installed engine. For weight assignment purposes engine displacement will be rounded to the nearest 100cc (e.g., 2150cc = 2200cc or 2149cc = 2100cc).

Factory Engine Minimum Displacement(cc)	*Weight*
1600	*1760*
1700	*1870*
1800	*1980*
1900	*2090*
2000	*2200*
2100	*2310*

1. The Mazda 13b and Renesis rotary engines are permitted at 2600 lbs. The 13b may be street ported. The Renesis shall remain unported.

2. All turbocharged engines shall use a compressor inlet restrictor/weight combination from the following table.

Inlet Restrictor Minimum (mm)	*Weight*
33	*2200*
35	*2475*
37	*2770*
39	*3100*

Item 13. Effective 11/1/08: Change section 9.1.4.A. as follows: No model years older than 19~~90~~*85* will be permitted.

MOTION: To adjourn. (Lybarger/Dent)

Respectfully submitted,

Jim Christian
Secretary

CLUB RACING BOARD MINUTES

CLUB RACING BOARD MINUTES | *Novemebr 1-2, 2008*

The Club Racing Board met at the SCCA offices in Topeka, KS, on November 1-2, 2008. Participating were Bob Dowie, Chairman; Chris Albin, Stan Clayton, Dave Gomberg, Peter Keane, and Russ McHugh. Also participating were: Jim Christian and Jerry Wannarka, BoD Liaison; Terry Ozment, Vice President of Club Racing; John Bauer, Technical Services Manager; Kevin Yaghoubi, Technical Coordinator Club Racing; Lauri Burkons, CRB Secretary.

In addition to those items covered in Technical Bulletin 12-08, the following decisions were made:

SUBMITTED TO BoD FOR APPROVAL

The following subjects will be referred to the Board of Directors for approval. Address all comments, both for and against, to the Club Racing Board. Comments may be e-mailed to crb@scca.com.

GCR

Item 1. Effective 1/1/09: Change the third paragraph of section 3.1.5 as follows:

BMW CCA Club Racing (Full Competition), FIA (issued by any sanctioning body), ICSCC (Area Conference), IMSA, Midwestern Council of Sports Car Clubs MCSCC (Full),NASA (Full Competition) Porsche Club of America (Full Competition), SCCA Pro Racing, Waterford Hills Road Racing Club (Full), West Canada Motorsport Assoc (Amateur)., Ontario Region CASC (Regional), Confederation of Autosport Car Clubs CACC(Competition)., SVRA, Historic Sportscar Racing (HSR), *VARA (Full Competition),* Vintage Motorsports Council (VMC).

Item 2. Effective 1/1/09: Change section 4.4.5.F as follows:

Canadian residents holding a current ~~ASN~~ Professional Grade "~~A~~ C" or better ...

2. Application shall include a copy of the current ~~ASN L~~ *l*icense and ~~ASN M~~ *m*edical form.

Item 3. Effective 1/1/09: Change the following item in the section 5.1.1 list:

Chief~~/Series Chief~~ Technical and Safety Inspector (Scrutineer)

Item 4. Effective 1/1/09: Change the third paragraph section 5.7.2 as follows:

Sound control ~~will~~ *may* be in effect for all events. ... A driver registering a single sound level reading over ~~103db~~ *that allowed* shall not be black flagged.

Item 5. Effective 1/1/09: Change the title of section 5.9.1 as follows:

Chief~~/Series Chief~~ Technical and Safety Inspector (Scrutineer)

Item 6. Effective 1/1/09: Add following sentence to the end of the second paragraph of section 9.1.11:

Legend Cars may run with any DOT 205/60/13 tires.

Item 7. Effective 1/1/10: Change section 9.3.25 as follows:

9.3.25. FUEL

All cars shall use fuel, as defined below, unless a specific exemption is made in the provisions for a specific category/class.

A. Permitted Fuel

Permitted fuel is herein defined as gasoline *meeting specified dielectric constant standards and not containing any prohibited substance in excess of stated limits*. Gasoline is a mixture of refined hydrocarbons. Gasoline is an electrical insulator and its relative effectiveness as an insulator is represented by its dielectric constant (D.C.). The ~~average~~ D.C. of gasoline, ~~as~~ *will be* measured by an SCCA Fuel Check Meter (High Desert Engineering HDE-1~~), is defined as "0.0"~~. Gasoline may be tested and certified at SCCA events by the determination of the dielectric constant using the SCCA Fuel Check meter and through the application of various chemical ~~analyses (e.g., Reagent "A").~~

~~SCCA Approved Fuel Meter: High Desert Engineering Model G-01~~

~~SCCA Approved Reagent Test(s) Germane Engineering Reagent "A"~~

~~Use of propylene oxide, ethylene oxide, paradioxane, and basic nitrogen or sulfur bearing compounds (i.e. pyridine, aniline, pyrrole, dimethylsulfoxide, etc.) is prohibited.~~

The use of any substance in the following table in excess of the stated limit is prohibited.

Chemical Compounds Prohibited or Restricted in SCCA Race Fuels

Compounds	*Examples*	*Maximum Percentage By Weight Allowed*
Total Aldehydes	*Acetaldehyde, Acrolein, Formaldehyde*	*1*
Benzene		*2*
Total Cyclic ethers	*1,4 Dioxane, Furan, Tetrahydrofuran*	*0.05*
Total Dienes(Diolefins)	*1,3 Butadiene, Isoprene*	*1*
Ethanol		*10*
Total Epoxides	*Ethylene oxide, Propylene oxide*	*0.05*
Methanol		*1*
Total Metal Compounds	*Manganese, Boron and Chromium*	*0.05 gm/gal*
Total Lead Compounds	*TML, TEL*	*5.0 gm/gal*
Total Nitrogen Compounds	*Nitromethane, Nitroethane. Nitropropane, and all aromatic nitrogen compounds such as Nitrobenzene, Ammonia, Amines and their salts, Aniline, Hydrazine, Pyridine, Pyrrole, Benzidine*	*0.05*
Styrene		*1*
Total Sulfur Compounds	*Dimethylsulfoxide, Thiophene*	*0.05*

Fuel Standards			
Classes	**Type**	**DC**	**Reagent**
		max	**A**
All Prepared, FB, FE, SS, SM, T, IT, SRF, and Olds SR, and Elan spec DP-02 running as CSR	Gasoline w/ no added oil	15	N/A
All other classes (incl. 2-cycle w/ oil injection)	Gasoline w/ no added oil	0	No pos.
All 2-cycle w/o oil injection	Gasoline w/ oil mixture	2	No pos.
All rotary engines	Gasoline w/ or w/o oil mixture	15	N/A

Item 8. Effective 1/1/10: Add the following to section 9.3.28.A as follows:

The numeral '1' shall be exclusively reserved for the current national champion in each class for national events. In the event two or more national champions are entered in the same run group, the first to register shall have preference.

Item 9. Effective 1/1/09: Add the following paragraph to the end of section 9.3.46:

In addition, if the main hoop of formula and sports racing cars is faired in, the fairing shall have access holes to allow the insertion of a bar or strap, which will allow the car to be lifted by a wrecker.

Item 10. Effective 1/1/09: Change section 9.4.G.8 as follows:

MANUFACTURER SUPPLIED / FIA HOMOLOGATED ROLL CAGES: Cars may compete with FIA *or FIA-Approved Test Houses* homologated cages provided the cage was built by the manufacturer or a manufacturer designated shop/team and approved for use. Cars must have *an* FIA identification plate attached to the cage along with a letter from SCCA Technical Services certifying the origins of the car, *or confirmation that the cage was certified by an FIA-approved Test House.*

Formula

Effective 1/1/09: The CRB recommends the adoption of the following package of rules changes and competition adjustments to achieve a balance among the engine options in the FC class. This package will result in all cars running at the same minimum weight, regardless of engine option chosen. It makes critical drive train components and power outputs as nearly the same as is feasible with minimum expenditures by the competitors.

Summary of changes:

Zetec – new version of the required ECU map; new restrictor; reduce minimum weight to 1,200 lbs

Pinto, aluminum head – lightened flywheel; reduce weight to 1200 lbs

Pinto, iron head – lightened flywheel; optional alternate camshaft; increase minimum weight to 1,200 lbs

Specification changes and adjustments:

Item 1. Change section 9.1.1.B.3.a. as follows:

The rockers shall remain entirely unmodified. Alternate manufacturers may be used as long as the original materials and dimensions are the same. Camshafts must be from Ford Motor Company, or Crower part # E-57553 FF2000, or from the approved supplier. Camshaft geometry shall be stock. *An alternate optional camshaft, Elgin part number 2000FC, may be used only in the original iron head.*

Item 2. Change section 9.1.1.B.3.c as follows:

The flywheel shall be a standard component or the approved alternate Elite-001. The minimum weight is ~~14.4~~ *9.5* lbs. with ring gear. …

Item 3. Change section 9.1.1.B.4.l as follows:

… The restrictor internal diameter is ~~1.295~~ *1.340* inches. …

Item 4. Change ssection9.1.1.B.11 as follows:

Weight *1200 lbs.*

~~Pinto Engine – 1190 lbs.~~

~~Pinto w/ aluminum cyl. head – 1215 lbs.~~

~~Zetec Engine – 1220 lbs~~.

Sports Racing

Item 1. Effective 1/1/09: Remove the second paragraph of section 9.1.9.A.2.a.14 as follows:

15. Subject to the restrictions in line Y below and the single inlet restrictor (SIR) table below, 4-cylinder, 4-cycle, production-based automotive engines are allowed. No additional individual engine homologations of 4-cylinder, 4-cycle engines over 1600cc will be made.

~~To establish the originality of the crankshaft, connecting rods, and pistons, each driver/entrant shall have a factory shop manual for the specific make, model, and year of the automobile for which the engine was produced. This manual shall be presented when so requested by any technical inspector. If the factory shop manual is no longer available from the vehicle manufacturer, an aftermarket shop manual will be accepted with proof of non availability from the vehicle manufacturer. Parts listed by the manufacturer in factory service manuals or parts guides for a particular engine that supersede or replace original parts are permitted. The proof of legality shall rest upon the protestor and/or protestee.~~

Item 2. Effective 1/1/09: Change Line Y of the engine table following section 9.1.9.A.2.a.14 as follows:

Specific Engine	Max. Displ. (cc)	Head Type	Max. Valves / Cyl.	Induction	Weight (lbs) carb / F.I.	Notes
				See SIR table		
4 Cyl	See SIR table			*29 mm SIR* , except	1300/1325	Must use SIR as specified in Appendix B. *Over 1615 cc up to 2000 cc: 1300/1300 lbs; over 2000 cc up to 2500 cc: 1350/1350 lbs.* Only stock crank-shaft, connecting rods and pistons are allowed; balancing is allowed, but one rod/piston assembly must be unto
4 Cylcle	*2500*	Unrestricted	4	under 2000cc, less than 10:1 CR, unrestricted;	*See Notes*	
				under 2500cc, less than 9:1 CR, unrestricted.		

Item 3. Effective 1/1/09: Delete the SIR Table for CSR following section 9.1.9.A.2.a.14 in its entirety as follows:

~~SIR Table for CSR (dimensions in mm)~~

Displacement (cc)				
Max.Compression Ratio	1800	2000	2200	2500
9	N/R	N/R	N/R	29
10	N/R	N/R	29	28.5
11	29.5	29	28.5	28
12	29	28.5	28	27
13	28.5	28	27	26.5

Grand Touring

Item 1. Effective 1/1/09: Remove the third paragraph of section 9.1.2.F.2 as follows:

~~All 1990 model year and later rear and mid-engined GT cars may use the manufacturer's original type of suspension or double A arm front and rear independent suspension as defined above. All rear and mid-engined GT cars manufactured prior to the 1990 model year shall retain the manufacturer's original type of front and rear suspension.~~

Improved Touring

Item 1. Effective 1/1/09: Add the following sentence to section 9.1.3.D.9.i:

The complete duct assembly in the plane of the window shall be no longer than 100 sq inches.

Item 2. Effective 1/1/09: Add the following sentence to section 9.1.3.D.9.m:

If equipped, the vent window and its supporting structure may be removed.

Item 3. Effective 1/1/09: Reclassify the level 2 Volvo 142 in HP at 2,475 lbs.

Item 4. Effective 1/1/09: Add a new subsection 3 to section 9.1.10.D.1.f as follows:

3. An oil separator is allowed.

Item 5. Effective 1/1/09: Add a new subsection 2 to section 9.1.10.D.4.a as follows:

2. A transmission catch tank is permitted.

Item 6. Effective 1/1/09: Add a new subsection 4 to section 9.1.10.D.4.b as follows:

4. A differential catch tank is permitted.

Spec Miata

Item 1. Effective 1/1/09: Change section 9.1.8.C.6.o as follows:

o. Tires -

1. National Competition

All cars shall use ~~the~~ Toyo ~~Proxes RA-1~~ *R888* (205/50R15).

2. Regional Competition

~~Any DOT approved tire is permitted. Racing, recapped, or regrooved tires are not allowed. Tire size is unrestricted. The only modifications allowed to tires are having treads "shaved" or "trued." Individual regions may require spec tires for regional races. Supplemental regulations for specific events should be checked.~~

Effective 1/1/09- All Regional SM races will use either Toyo RA-1s or Toyo 888s (205/50R15).

Effective 7/1/09- All Regional SM races will use either Toyo888s (205/50R15).

Showroom Stock

Item 1. Effective 1/1/09: Reclassify the SSB Hyundai Tiburon (03-04) to SSC at 3290 lbs.

Touring

Item 1. Effective 1/1/09: Reclassify the ST Lotus Sport Exige Cup 255 (2007) to T1 at 2090 lbs.

Item 2. Effective 1/1/09: Reclassify the ST Ferrari 430 Challenge (06-07) to T1 at 3350 lbs. Notes: Must use same wheels, tires, and brakes as specified on the Ferrari 360.

Item 3. Effective 1/1/09: Reclassify the T1 Acura NSX (97-03) to T2 at 3100 lbs.

Item 4. Effective 1/1/09: Reclassify the T2 Acura Integra Type-R (97-01) to T3 at 2650 lbs.

Item 5. Effective 1/1/09: Add a new section 9.1.10.D.1.f

3. An oil catch can is permitted.

Item 6. Effective 1/1/09: Add a new section 9.1.10.D.4.a

2. An oil catch can is permitted.

Item 7. Effective 1/1/09: Add a new section 9.1.10.D.4.b

4. An oil catch can is permitted.

RECOMMENDATIONS TO THE BoD

1. The CRB recommends that the fuel testing currently specified in 9.3.25 be suspended until a decision is made about a new fuel testing regime.

2. FA – Based on member input, the CRB wishes to rescind its recommendation to remove the 25 lb penalty on fuel injected cars.

MEMBER ADVISORIES

1. Production – Per the writer's request, in the October Fastrack CRB minutes, Not Recommended, Production Item 1, change the letter subject from "Allow alternate roll cage designs" to "*Roll cage engineering study"* (Haynes). The response remains the same (Not recommended – The roll cage rules provide a set of minimal parameters for the design.)

2. Touring – The CRB would like input from the Touring community about removing the interiors of all Touring cars.

3. Touring – The CRB would like input from the Touring community about removing catalytic converters.

4. Driver safety equipment – The CRB would like input from the membership about whether head and neck restraints should be made mandatory.

NEW CAR CLASSIFICATIONS

ITS – Porsche 944 (1989), compression 10.9:1

ST – Lotus 2-Eleven (cage must meet SCCA specs)

B Prepared – E36 M3

REFERRED or TABLED

Grand Touring

GTL – Reclassify the RX-7 to GT2 (Tambourine). Tabled for further research.

Improved Touring

1. ITA – Classify the 02-03 Celica in ITA (McCaughey).
2. ITB – Reevaluate the 88-91 Honda Civic DX hatchback/sedan specifications (Giles). Tabled for further research.
3. ITB – Reduce the weight of the 79 BMW 320i (Engleman). Tabled for further research.
4. ITB/ITC – Run the ITB 914 and ITC 914 through the process (Meredith).Tabled for further research.
5. ITR – Classify V8s (Robertson). Tabled for further research.
6. ITS – Classify the 99+ Mk IV VW Golf/Jetta VR6 (Alphin). Tabled for receipt of VTS.

Production

1. P – Re-evaluate the Spitfire (Brannon). Tabled for further research.
2. GP – Reclassify the GP Alpha Spider (Wood). Tabled for further input from the member.
3. HP – Reduce the weight of the HP full prep chassis/LP motor Spridgets (Larson). Tabled for year-end HP review.

Touring/Showroom Stock

1. T1 – Help the C5 Corvette (Buttermore). Tabled for further research.

2. T1 – Allow alternate sway bars for the Corvette (Pfadt). Tabled for further research.

3. T1 – Reduce the minimum weight of the 08-09 Corvette (with LS3 engine) from 3530 lbs to 3380 lbs (Ingle/McGinley). Tabled for further research.

4. T1 – Reduce the minimum weight of the C5 Corvette to 3240 lbs by allowing the removal of the passenger seat and the emergency brake (Ingle/McGinley). Tabled for further research.

5. T1 – Reduce the minimum weight of the Viper to 3650 lbs (Ingle/McGinley). Tabled for further research.

6. T2 – Help the Lotus (2 letters). Tabled for further research.

7. T2 – Classify the 08 Subaru WRX STI (Aquilante). Tabled for receipt of VTS.

8. T3 – Allow the RX-8 a transmission cooler (Van Cleef). Tabled for receipt of parts.

NOT RECOMMENDED

GCR

1. Change the fuel cell rules (Warner). There is no time-based requirement for replacing fuel cells.

2. Make public all information used to determine competition adjustments (Haynes). This information is confidential.

3. Reconsider side protection (Wentworth). Section 9.4.2.G.6 allows any number of tubes.

4. Require egress times (Gulick). This might be in conflict with the American Disabilities Act.

Grand Touring

1. GT – Disallow fuel cooling devices (Lentz). Fueling cooling devices are not currently permitted.

2. GTL – Remove the FP roadster from GTL (Foley). The car is correctly classified.

3. GTL – Classify the Lotus 7 body (Foley). There is no direct link from manufacturer to manufacturer.

4. GTL – Allow the Toyota 1600 cc, 2-valve, non-crossflow a 27 mm SIR (Bacon). The SIR size is determined by engine architecture

Improved Touring

1. IT – Allow the removal of miscellaneous parts (Baader). The rules are adequate as written.

2. ITA – Classify the Spec Miata (Zimmerman). The Miata is already classified in IT.

3. ITA – Re-evaluate the MR2 weight (Griffith). The car is appropriate as classed.

4. ITA – Help the 1.6 Miata (Whitton). The car is appropriate as classed.

5. ITB – Reduce the weight of the Protégé (Allen). The car is appropriate as classed.

6. ITS – Reduce the weight of 325i E30 (Staub). The car is classified correctly.

Production

1. P – Test cage specifications as described in the GCR (Haynes) Refer to the October 2008 FasTrack.

2. P – Allow aftermarket brakes (Spicuzza). The class requires only alternate brakes within the same manufacturing family.

3. EP – Allow a dry sump for the Caterham 7 (Barron). The cars have run for several years in the current configuration. We will continue to monitor the situation.

4. HP – Reduce the weight of the X-19 (Spicuzza). The car is classified correctly.

Touring/Showroom Stock

1. T1 – Allow alternate shock mount for all T1 cars (Ingle). This is a factory class.

2. T2/T3 – Allow an alternate brake duct kit for the T2 WRX Sti and the T3 WRX (Haney). There is already an approved brake duct kit.

Spec Miata

1. Allow the 94-97 to use the adjustable 24 mm front sway bar (Yepez). The cars are competitive as specified.

2. Reduce the weight of the 96-97 by 25 lbs (Henry). The cars are competitive as specified.

3. Change the 96-97 restrictor to 47 mm (Henry). The cars are competitive as specified.

PREVIOUSLY ADDRESSED

Addressed in Technical Bulletin 08-10 or the October 2008 FasTrack:

GCR – Safety equipment clarification (Dean).

GCR – Support for 1986 FIA suits (10 letters).

GTL – Base the splitter rule on the outline of the front of the car (Roberts).

Prepared – Allow 5-valve engines (Drake).

NO ACTION REQUIRED

GCR

1. Opposition to prohibition of leaded fuels (Burns). Thank you for your input.
2. Use the white flag to indicate slow traffic prior to a restart (Zola). This is already allowed.
3. Opposition to combined practice times for double national weekends (McCarthy). The GCR minimum times do not require single sessions. This is an issue to raise with the sanctioning region.
4. Sound input (Snaveley). Thank you for your input.
5. Runoffs fuel input (4 letters). Thank you for your input.
6. Define "on the track" (Martin). Thank you for your input. The rule is adequate as defined.
7. Proposal for club racing (LaManna). Thank you for your input. Your proposal will be forwarded to the BoD's strategic planning committee.
8. Require removable steering wheels (Baker). Thank you for your input. Removable steering wheels are already allowed.
9. Roll cage input (Haynes). Thank you for your input.
10. National/regional input (Butler). Thank you for your input.
11. Support for mandating the HANS device (2 letters). Thank you for your input.
12. Make all adjustments before the competition year begins (Brannon). Thank you for your input. The subject is under consideration.
13. Runoffs schedule input (Murphy). Thank you for your input. We will consider your input when the 2009 Runoffs schedule is created.
14. Fuel testing input (Schue). Thank you for your input.

Formula/Sports Racing

1. FA – Opposition to the Swift 016 in FA (Firlein). Thank you for your input.
2. FC – Will the Zetec receive a mapping change? (Shaffer). Thank you for your input. Refer to the recommended 2009 specification.
3. FF – Wheel input (5 letters). Thank you for your input.
4. CSR/DSR – Opposition to C/DSR turbo/supercharging (Major). Thank you for your input.

Improved Touring

1. ITA – MR2 reclassification input (Hummel). Thank you for your input.
2. IT – Allow alternate cams (Russell). Aftermarket replacement parts are permitted. See GCR section 9.1.3.C.

Production

1. FP – Leave the prep level 2 classification for the 88-91 Honda Civic and CRX Si (O'Toole). There is no intention to change this classifications. Both levels are specified with weight differentials.
2. GP – Reinstate the Fiat 124 (Dorety).The 124 with the 1438 cc engine is classed in HP level 1 at 2260 lbs; the 1608 cc is classed in FP level 1 at 1875 lbs.

American Sedan

Opposition to rocker arms (2 letters). Thank you for your input.

Touring/Showroom Stock

1. T3 – Z4 classification input (2 letters). Thank you for your input.
2. SS – SS input (DeLude). Thank you for your input.

Spec Miata

Tire selection input (3 letters). Thank you for your input.

RESUMES

GT – Peter Zekert. Thank you for your resume. We will keep it on file.

CLUB RACING TECHNICAL BULLETIN

DATE: November 1-2, 2008
NUMBER: TB 08-12
FROM: Club Racing Board
TO: Competitors, Stewards, and Scrutineers
SUBJECT: Errors and Omissions, Competition Adjustments, Clarifications, and Classifications.

All changes are effective 12/1/08 unless otherwise noted.

GCR

1. Section 8.1.4, p. 66, restore the following sentence at the end of the section: *A portion of these fees may be refundable at the discretion of either or both courts.*
2. *Clarify Appendix B. Technical Glossary by making the following changes:* **Advance Curve** *- The degrees of distributor advance from the static setting as a function of rotational speed,* ~~*usually*~~ *achieved* ~~*by a system of rotating weights, springs, and limit stops within the distributor body*~~ *by mechanical or electronic means.*
3. *Clarify Appendix B. Technical Glossary by making the following changes:*

Piston Deck Height - The distance between the top of the piston at its outer edge and the machined surface ~~which~~ *that* forms the head/block interface of the block *(piston). The distance between the crankshaft centerline and the machined surface that forms the head/block interface of the block (block).*

Block Deck Height *- The distance between the crankshaft centerline and the machined surface that forms the head/block interface of the block.*

4. Clarify Appendix B. Technical Glossary by making the following changes: **Differential** - A gear assembly~~, physically separate from the transmission,~~ whose purpose is to reduce the rotational velocity transmitted from the engine/gearbox, while providing a division of driving force to two (2) wheels.
5. *Appendix B. Technical Glossary, add the following definition:* ***Equivalent*** *– the same form, fit, function, and dimensions.*
6. *Appendix B. Technical Glossary, add the following definition:* ***Lamp*** *– see* ***Bulb****.*
7. *Clarify Appendix B. Technical Glossary by making the following changes:* ***Oil Separator*** *– Sealed inline catch tank, generally located between the crankcase vent and intake tract.*
8. *Clarify Section 9.3.46 by adding a new paragraph: In addition, for formula and sports racing cars, if the main hoop is faired in, the fairing shall have access holes to allow the insertion of a bar or strap to allow the car to be lifted by a wrecker.*
9. Correct 9.3.19.A to read as follows: *Driving suits that effectively cover the body from the neck to the ankles and wrists. One piece suits are highly recommended. All suits shall bear an SFI 3.2A/1 or higher certification label or FIA 1986 Standard or FIA Standard 8856-2000 homologation label. Underwear of fire resistant material shall be used, but is optional with suits carrying an FIA 1986 Standard or FIA Standard 8856-2000 label or SFI 3-2A/5 or higher (e.g.,/10, /15, /20) certification label.*
10. Section 9.3.31, p. 88-89, change the last sentence of the first paragraph as follows: *Light assemblies shall be considered one light for the purposes of this rule, irrespective of the number of individual lamps the assembly may contain.*
11. *Section 9.3.31, p. 88-89, add the following sentence to the end of the first paragraph: Light assemblies may perform both rain and brake light functions provided they have two distinct illumination levels.*

Improved Touring

ITR

1. Acura Integra Type R (98-01), p. 342, change the listing to read (97-98/00-01).
2. BMW Z4 (03-05), classified in TB 08-10, change the listing to read (03-04).

ITS

1. Mazda MX-5/Miata (01-02), p. 346, add to the listing to include the 03-04 model years.
2. Mazda MX-5/Miata (99-00), p. 346, add to the specs as follows: Gear Ratios: 3.76, 2.27, 1.65, 1.26, 1.00, .84.
3. Mazda MX-5/Miata (01-02), p. 346, add to the specs as follows: Gear Ratios: 3.76, 2.27, 1.65, 1.26, 1.00, .84.

Prepared

1. Change the Prepared category name to Super Touring.
2. Change the B Prepared class name to STO.
3. Change the D prepared class name to STU.

Production

1. Section 9.1.5.E.9.a.1, p. 411, add the following sentence: *Existing seams in the unibody and frame can be welded.*

EP

1. Classify the Honda S2000 as a Level 2 car in EP.

Add new spec line to PCS-B, p. 420-421, Honda S2000 (00-03), Prep. Level: 2, Weight(lbs): 2580 *2645 **2709, Engine Type: 4 Cyl DOHC, Bore x Stroke(mm): 87.0 x 90.7, Displ.(cc): 2157, Block Mat'l: Alum, Head Mat'l: Alum, Valves IN & EX(mm): (I)36.1 (E)31.1, Carb. No. & Type: Fuel Injection, Wheelbase(in): 94.5, Track(F&R)(in): 62.1 / 63.7, Wheels(max): 16 x 7, Trans Speeds: 6, Brakes Std.(mm): (F)300 Vented Disc (R)282 Solid Disc, Notes: Comp. Ratio limited to 12.0:1, Valve lift limited to .500".

FP

1. Acura Integra 1600 (86-89), p. 432-433, change the specs to read as follows: Weight(lbs): 1843 *1889 **1935.

2. Acura Integra LS (95-01), p. 432-433, change the specs to read as follows: Weight(lbs): 2123 *2176 **2229.
3. BMW 1600, p. p. 434-435, change the specs to read as follows: Weight(lbs): 1891.
4. BMW 320i (E21) (80-83), p. 434-435, change the specs to read as follows: Weight(lbs): 1957 *2006 **2055.
5. BMW 318i (E30) (84-85), p. 434-435, change the specs to read as follows: Weight(lbs): 1957 *2006 **2055.
6. Chevrolet Chevette 1.6, p. 434-435, change the specs to read as follows: Weight(lbs): 1853.
7. Honda Civic Si (88-91), p. 436-437, change the specs to read as follows: Weight(lbs): 1948 *1997 **2045.
8. Honda CRX Si (88-91), p. 438-439, change the specs to read as follows: Weight(lbs): 1805 *1850 **1895.
9. Mercury Capri 1.6L (91-94), p. 438-439, change the specs to read as follows: Weight(lbs): 1853 *1899 **1946.
10. MGA 1500 / 1600 / 1622 Coupe & Roadster, p. 438-439, change the specs to read as follows: Weight(lbs): 1862.
11. Nissan/Datsun PL510, p. 440-441, change the specs to read as follows: Weight(lbs): 1891.
12. Nissan/Datsum SPL 311 / 311-U, p. 440-441, change the specs to read as follows: Weight(lbs): 1824.
13. Saab 900S (85-94), p. 440-441, change the specs to read as follows: Weight(lbs): Sedan: 2052 *2103 **2155 Conv.: 2147 *2200 **2254.
14. Saturn SL2 (91-95) SC/SC1/SC2 (91-97) Correct October Tech Bulletin, FP Item 1 (Classify Saturn SL2 in FP): change Level 1 to Level 2; change base weight from 2360 to 2235; add wheelbase 2601 (102.4) except 91-96 coupe 2520 (99.2); change track from 56.8 / 56.0 to 61.0 front / 60.2 rear; change Wheels(max): 15 x 6 to 15 x 7; add to Notes: Comp. Ratio limited to 11.0:1 Valve lift limited to .450".
15. Suzuki Swift GT & GTi, p. 442-443, change the specs to read as follows: Weight(lbs): 1691.
16. Toyota Corolla (2TC) (71-74), p. 442-443, change the specs to read as follows: Weight(lbs): 1853.
17. Volkswagen Jetta (includes GLI) (82-84), p. 442-443, change the specs to read as follows: Weight(lbs): 1824.
18. Volkswagen Scirocco 1715/1780, p. 451-452, change the specs to read as follows: Weight(lbs): 1853.
19. Volkswagen Rabbit (includes convertible) 1715/1780, p. 444-445, change the specs to read as follows: Weight(lbs): 1853.
20. Volkswagen Rabbit 1457/1471 (includes Cabriolet/Convertible), p. 444-445, change the specs to read as follows: Weight(lbs): 1520.
21. Volkswagen Rabbit 1588 (includes Cabriolet/Convertible), p. 444-445, change the specs to read as follows: Weight(lbs): 1663.
22. Volkswagen Scirocco 1457/1471, p. 444-445, change the specs to read as follows: Weight(lbs): 1520.
23. Volkswagen Scirocco 1588, p. 444-445, change the specs to read as follows: Weight(lbs): 1663.

HP

1. Correct the specs for the Renault LeCar/R5 classified in TB-08-10 as follows:
Prep. Level: ~~2~~ *1*, Weight(lbs): ~~1830~~ *1990*.
2. Toyota Corolla (71-74), p. 460-461, add to the specs as follows: Trans. Speeds: *or 5*.

AS

1. Cadillac CTS-V (04-05) Restricted Prep., classified in TB-06-10, change the ninth sentence of the notes as follows: Factory fuel tanks may be utilized~~ until Dec 31st 2009 unless specifically allowed~~. Add an additional sentence to the end of the notes: *Any final drive ratio and LSD permitted.*
2. Cadillac CTS-V (06-07) Restricted Prep., classified in TB-06-10, change the ninth sentence of the notes as follows: Factory fuel tanks may be utilized~~ until Dec 31st 2009 unless specifically allowed~~. Add an additional sentence to the end of the notes: *Any final drive ratio and LSD permitted.*
3. Camaro & Firebird (94-97) Restricted Prep., classified in TB-06-10, change the ninth sentence of the notes as follows: Factory fuel tanks may be utilized~~ until Dec 31st 2009 unless specifically allowed~~. Add an additional sentence to the end of the notes: *Any final drive ratio and LSD permitted.*
4. Mustang Cobra (94-95) Restricted Prep., classified in TB-06-10, change the ninth sentence of the notes as follows: Factory fuel tanks may be utilized~~ until Dec 31st 2009 unless specifically allowed~~. Add an additional sentence to the end of the notes: *Any final drive ratio and LSD permitted.*
5. Mustang Cobra R (1995) Restricted Prep., classified in TB-06-10, change the ninth sentence of the notes as follows: Factory fuel tanks may be utilized~~ until Dec 31st 2009 unless specifically allowed~~. Add an additional sentence to the end of the notes: *Any final drive ratio and LSD permitted.*
6. Mustang Cobra (96-98) Restricted Prep., classified in TB-06-10, change the ninth sentence of the notes as follows: Factory fuel tanks may be utilized~~ until Dec 31st 2009 unless specifically allowed~~. Add an additional sentence to the end of the notes: *Any final drive ratio and LSD permitted.*
7. Mustang Cobra (99-02) Restricted Prep., classified in TB-06-10, change the ninth sentence of the notes as follows: Factory fuel tanks may be utilized~~ until Dec 31st 2009 unless specifically allowed~~. Add an additional sentence to the end of the notes: *Any final drive ratio and LSD permitted.*
8. Mustang Mach 1 (03-04) Restricted Prep., classified in TB-06-10, change the ninth sentence of the notes as follows: Factory fuel tanks may be utilized~~ until Dec 31st 2009 unless specifically allowed~~. Add an additional sentence to the end of the notes: *Any final drive ratio and LSD permitted.*
9. Mustang Coupe GT (05-07) Restricted Prep., classified in TB-06-10, change the ninth sentence of the notes as follows: Factory fuel tanks may be utilized~~ until Dec 31st 2009 unless specifically allowed~~. Add an additional sentence to the end of the notes: *Any final drive ratio and LSD permitted.*
10. Pontiac GTO (04-05) Restricted Prep., classified in TB-06-10, change the ninth sentence of the notes as follows: Factory fuel tanks may be utilized~~ until Dec 31st 2009 unless specifically allowed~~. Add an additional sentence to the end of the notes: *Any final drive ratio and LSD permitted.*

11. Pontiac GTO (2006) Restricted Prep., classified in TB-06-10, change the ninth sentence of the notes as follows: Factory fuel tanks may be utilized~~ until Dec 31st 2009 unless specifically allowed~~. Add an additional sentence to the end of the notes: *Any final drive ratio and LSD permitted.*
12. Camaro & Firebird (82-92), p. 482, Effective 11/01/08, add to the specs as follows: Notes: Add 100 lbs. for Edelbrock Cylinder Head.
13. Camaro & Firebird (93-02), p. 482, Effective 11/01/08, add to the specs as follows: Notes: Add 100 lbs. for Edelbrock Cylinder Head.
14. Mustang Incl. Cobra & Cobra R (79-93), p. 482, Effective 11/01/08, add to the specs as follows: Notes: Add 100 lbs. for Edelbrock Cylinder Head.
15. Mustang Incl. Cobra thru 95 (94-98), p. 482, Effective 11/01/08, add to the specs as follows: Notes: Add 100 lbs. for Edelbrock Cylinder Head.
16. Mustang Incl. Cobra (99-04), p. 482, Effective 11/01/08, add to the specs as follows: Notes: Add 100 lbs. for Edelbrock Cylinder Head.
17. Mustang GT (2005), p. 482, Effective 11/01/08, add to the specs as follows: Notes: Add 100 lbs. for Edelbrock Cylinder Head.
18. Capri (79-86), p. 482, Effective 11/01/08, add to the specs as follows: Notes: Add 100 lbs. for Edelbrock Cylinder Head.
19. GTO (04-06), p. 482, Effective 11/01/08, add to the specs as follows: Notes: Add 100 lbs. for Edelbrock Cylinder Head.

Showroom Stock

SSB

1. Nissan Sentra Spec-V, classified in TB-08-10, change the spec as follows: Notes: Factory Brembo brakes allowed.
2. Honda Civic Si (06-07), p. 491, change the specs to read as follows: Weight(lbs): 3050.
3. Mazda MX-5 (06-08), p. 492, change the specs to read as follows: Weight(lbs): 2700.

SSC

1. Acura Integra LS (3 door) (95-01), p. 494, change the specs to read as follows: Weight(lbs): 2570.
2. Nissan Sentra SER Spec-V (02-04), p. 496, change the specs to read as follows: Weight(lbs): 3100.
3. Nissan Sentra SER Spec-V (05-06), p. 496, change the specs to read as follows: Weight(lbs): 3150.
4. Honda Accord LS-X (2008), classified in TB-08-01, change the specs to read as follows: ~~LS X~~ *LX-S*.
5. Volkswagen Rabbit 2.5 (06-07), p. 498, change the specs to read as follows: Weight(lbs): 3200.

Spec Miata

1. Mazda MX-5/Miata (90-93), p. 509, **Effective 1/1/09** change the specs to read as follows: Weight(lbs): 2285.
2. Mazda MX-5/Miata (94-95), p. 509, **Effective 1/1/09** change the specs to read as follows: Weight(lbs): 2385, Restrictor Size (mm): 45mm.
3. Mazda MX-5/Miata (96-97), p. 509, **Effective 1/1/09** change the specs to read as follows: Weight(lbs): 2385.
4. Mazda MX-5/Miata (99-00), p. 509, **Effective 1/1/09** change the specs to read as follows: Weight(lbs): 2450.
5. Mazda MX-5/Miata (01-05), p. 509, **Effective 1/1/09** change the specs to read as follows: Weight(lbs): 2450, Restrictor Size (mm): 43mm.

Sports Racer

CSR

1. Change section 9.1.H.5 p.563 to read: Minimum weight is ~~1425~~ *1350*lbs.

Touring

T1

1. Dodge Viper SRT-10 Incl. Coupe (03-06), p. 576, change the specs to read as follows: Weight(lbs): 3600.
2. Chevrolet Corvette (2008), classified in TB 08-01, add to the specs as follows: Notes: Engine oil coolers (2 per car) #15803358 approved. Engine radiator #25999103 approved. Engine radiator baffle #25953429 approved. Power steering cooler #15925777 approved.
3. Chevrolet Corvette C6 Coupe (05-07), add to the specs as follows: Notes: Power steering cooler #15925777 approved.

T2

1. Chevrolet Cobalt SS (2008), classified in TB 08-01, change the specs as follows: Weight(lbs): 3150, Notes: front springs part # CCS635, rear springs # CCS639, front control arms # CCS636 and CCS637.
2. Chevrolet HHR SS (2008), classified in TB 08-01, add to the specs as follows: Weight(lbs): 3150, Notes: front springs part # CCS635, rear springs # CCS639, front control arms # CCS636 and CCS637.

T3

1. Correct the specs for the Lotus Exige classified in TB-08-10 as follows: Lotus Exige ~~(2005)~~ *(06-07).*

COURT OF APPEALS

JUDGEMENT OF THE COURT OF APPEALS
Chief Steward vs. SOM, COA Ref. No. 08-01-RO
October 7, 2008

FACTS IN BRIEF

Following the FF qualifying session on October 6, 2008, Skip Yocom, Assistant Chief Steward, Tech filed a Chief Steward's Action (CSA) against Tonis Kasemets, driver of FF # 37, for violating GCR Spec. Section 9.1.1.D.10.d. ("Wheel covers, wheel fans. or any device to fair in the wheel is prohibited.") and disallowed his qualifying times. C. William Kephart, Entrant for FF # 37, protested that action. The Stewards of the Meet (SOM) Court #1 R. David Jones, Gary Meeker and Steve Harris, Chairman, heard the protest, interviewed witnesses, examined the wheels on FF # 37 and other FF cars and ruled that the wheels were compliant as presented. Chief Steward Jim Averett appealed the First Court decision.

DATES OF THE COURT

The Court of Appeals (COA) Dave Nokes, Dick Templeton and Bob Horansky, Chairman, met on October 7, 2008 to review, hear, and render a decision on the appeal.

DOCUMENTS AND OTHER EVIDENCE RECEIVED AND REVIEWED

1. Appeal from Jim Averett, Chief Steward, dated October 7, 2008.
2. SOM Court #1 Decision and related documents received October 7, 2008.
3. Disassembled wheel from Mr. Kephart's FF # 37.
4. Assembled wheel from Mr. Kephart's FF # 37.

FINDINGS

The COA interviewed Steve Harris, Jim Averett, Bob Dowie, Chairman CRB, and Mr. Kasemets. The COA also examined the parts in question and the vehicle. The CRB Chairman emphasized the intent of GCR 9.1.1.D.10.d., but acknowledged that the wheels are compliant per the current GCR Technical Glossary.

DECISION

The Court of Appeals upheld the decision of the First Court. The wheels were ruled compliant. Mr. Averett's appeal was denied and Mr. Kasemets' qualifying times were reinstated.

COURT OF APPEALS

JUDGEMENT OF THE COURT OF APPEALS
Mathew Foley vs. SOM, COA Ref. No. 08-02-RO
October 9, 2008

FACTS IN BRIEF

Following the GTL qualifying session on October 8, 2008, Mathew Foley, Entrant for GTL #45, protested the car of Brian Linn, GTL #21, for violating GCR 9.1.2.F.4.b. (Chassis and Bodywork - Semi-monocoque and monocoque construction is prohibited.) The Stewards of the Meet (SOM) Court #2 Anne Christian, Glen Wilhelm, and Tom Brown, Chairman, heard the protest, interviewed witnesses, examined GTL #21 and determined that the car is not a monocoque as defined in the GCR and is therefore compliant with GCR 9.1.2.F.4.b. Mr. Foley appealed this decision.

DATES OF THE COURT

The Court of Appeals (COA) Dave Nokes, Dick Templeton and Bob Horansky, Chairman, met on October 9, 2008 to review, hear, and render a decision on the appeal.

DOCUMENTS AND OTHER EVIDENCE RECEIVED AND REVIEWED

1. Appeal from Matthew Foley and related material, dated October 9, 2008.
2. SOM Court #2 Decision and related documents received October 9, 2008.
3. Testimony from Tom Brown, Chairman, SOM, Matthew Foley, Entrant/Appellant, and Brian Linn, Driver, GTL #21.
4. Visual inspection of GTL #21.

FINDINGS

GCR Section 9.1.2.F.4.6. for GT2, GT3, and GTL states:

> Provisions in the rules permit one-off chassis and frames, to reduce the cost of building and repairing GT cars, not to permit high technology (streamlining and/or ground effects). Semi-monocoque or monocoque construction is prohibited.

The COA concluded that the prohibition against semi-monocoque and monocoque construction is limited to purpose-built chassis for GT2, GT3, or GTL. Cars classified in the GT Specifications are recognized in their as-designed and built configuration from the manufacturer. These may include unibody, semi-monocoque and monocoque designs.

The MG Midget is one of those specified designs and not a purpose-built chassis, and is therefore compliant.

The COA further concluded that all post-production structural modifications to recognized cars must be of tube frame design.

All post-production structural chassis modifications to GTL #21 are of tube frame design, and GTL #21 is therefore compliant.

DECISION

The Court of Appeals upheld the decision of the First Court. GTL # 21 is compliant. No substantive new evidence was presented by Mr. Foley. Mr. Foley's appeal was not well founded and his appeal fee shall be retained by SCCA.

COURT OF APPEALS

JUDGEMENT OF THE COURT OF APPEALS
William Ziegler vs. SOM, COA Ref. No. 08-03-RO
October 10, 2008

FACTS IN BRIEF

On the last lap of the T2 race on October 10, 2008, there was contact between car #05, driven by William Ziegler and car #35, driven by Don Knowles. Brian Holtz, Assistant Chief Steward, filed a Request for Action (RFA) with the Stewards of the Meet (SOM) to investigate the contact. SOM Court #1 Angelo Gazzola, Gary Meeker, and Steve Harris, Chairman, interviewed witnesses, reviewed videos, examined the cars, and determined that responsibility for the contact rested with Mr. Ziegler. The SOM assessed him a 16-position penalty resulting in Mr. Ziegler finishing behind Mr. Knowles. Mr. Ziegler appealed this decision.

DATES OF THE COURT

The Court of Appeals (COA) Dave Nokes, Dick Templeton and Bob Horansky, Chairman, met on October 10, 2008, to review, hear, and render a decision on the appeal.

DOCUMENTS AND OTHER EVIDENCE RECEIVED AND REVIEWED

1. Appeal from William Ziegler, Driver of T2 # 05, and related material.
2. SOM Court #1 Decision and related documents including videos from T2 cars 05 and 35.
3. Visual inspection of T2 cars 05 and 35.
4. Interview of Steve Harris, Mr. Ziegler, Mr. Knowles, and Alex Krugman, crew for T2 #37.

FINDINGS

At the beginning of lap 18, just beyond Start/Finish approaching Station Alpha, nose to tail contact between the leader car of Mr. Knowles and the second place car of Mr. Ziegler, resulted in Mr. Knowles spinning into the wall and not finishing the race. Mr. Ziegler continued and finished the race in first place. The SOM examined both cars and interviewed both drivers, reviewed statements from Starter Bob Kosky, and Alpha F&C corner worker, Monica Shaw, and studied in-car videos from each car and the Speed Channel unedited feed video of the race in question.

Following a thorough investigation of all of the videos and witness statements, the SOM determined that Mr. Knowles allowed Mr. Ziegler sufficient racing room, that Mr. Knowles was entitled to the racing line, and that he made no overt blocking maneuver that would cause the contact. Further, the SOM concluded that responsibility for the incident rested with the overtaking driver, Mr. Ziegler.

Mr. Ziegler said that Mr. Knowles did not leave sufficient racing room on the left side of the track as they approached the Alpha station. At the request of Mr. Ziegler, the COA interviewed a new witness who was standing at the pit wall when the incident occurred. Also at the request of Mr. Ziegler, Mr. Knowles watched the entire in-car video from Mr. Ziegler's car in the presence of the COA.

Mr. Knowles told the COA he knew Mr. Ziegler was behind him and did allow him enough room. Mr. Knowles opinion did not change after he viewed Mr. Ziegler's video.

DECISION

The Court of Appeals upheld the decision of the First Court. Mr. Ziegler presented no substantive new evidence. Mr. Ziegler's appeal was well founded and his appeal fee, less the administrative fee retained by SCCA, was returned.

COURT OF APPEALS

JUDGMENT OF THE COURT OF APPEALS
Eric Foss vs. SOM, COA Ref. No. 08-04-RO
October 11, 2008

FINDINGS OF THE COURT

During post-race impound for SM on October 10, 2008, the restrictor plate of SM #28, driven by Eric Foss, was reported by a Tech Inspector to be non-compliant. Based on this report, Jim Graffy, Assistant Chief Steward, Tech issued a Chief Steward's Action (CSA) disqualifying Mr. Foss. Mr. Foss protested the penalty. The Stewards of the Meet (SOM), Court #1 Angelo Gazzola, Gary Meeker, R. David Jones, and Steve Harris, Chairman, heard witnesses, observed re-inspections of the restrictor plate, and disallowed the protest. Mr. Foss appealed that decision.

DATES OF THE COURT

The Court of Appeals (COA) Dave Nokes, Dick Templeton and Bob Horansky, Chairman, met on October 11, 2008, to review, hear, and render a decision on the appeal.

DOCUMENTS AND OTHER EVIDENCE RECEIVED AND REVIEWED

1. Appeal from Eric Foss and related material, received October 11, 2008.
2. SOM Court # 1 decision and related documents, received October 11, 2008.
3. Testimony from Steve Harris, Chairman SOM; Eric Foss, driver of SM # 28; and Technical Inspectors Frank Diringer, Randy Sharpe, Ty Till and Hal Williams.
4. Examination of the restrictor plate in question and observation of measurements taken by several Technical Inspectors using different instruments.

FINDINGS

The COA examined all the evidence presented to the First Court and interviewed a new witness, Technical Inspector Randy Sharpe. Mr. Foss was told by an SCCA Technical Inspector following Thursday post-qualifying that the restrictor plate was in compliance. Based on that statement the restrictor plate was reinstalled on the vehicle, bearing the mark placed on it by Randy Sharpe. Mr. Sharpe confirmed that the mark was in place at post-race inspection. Additional inspection revealed that the characteristic original manufacturing surface was intact in the restrictor hole surface indicating that there was no modification to this surface done between the post-qualification inspection and the post-race inspection. Mr. Foss and crew acted in good faith only to be found out of compliance after the race with the same part and measuring equipment used post-qualifying.

Testimony from Technical Inspectors who measured the restrictor plate indicated that the measuring equipment design is inherently limited so that the measurement tolerance approximates the out-of-compliance dimensions. In addition, the optimal tool was not available for this measurement, particularly since the hole is irregular in shape. The COA witnessed a variety of different measurements from oversized to undersized while having Mr. Foss's restrictor plate re-measured.

The COA was cognizant of the statement in the GCR Technical Glossary Item 2 – Measurement Standards - that "Measuring devices available to Scrutineers differ from location to location so it is the responsibility of the driver to insure that measurements comply with these rules." Given that Mr. Foss had been assured by a Technical Inspector that his restrictor plate was compliant, the COA deems that this requirement was satisfied.

DECISION

The Court of Appeals overturned the decision of the First Court and reinstated Mr. Foss's finishing position. Mr. Foss's appeal was well-founded and his appeal fee, less the SCCA administrative fee, was returned.

COURT OF APPEALS

JUDGMENT OF THE COURT OF APPEALS
Mark Drennan vs. SOM, COA 08-05-RO
October 12, 2008

PRIOR PROCEEDNGS AND FACTS IN BRIEF

At the Runoffs at Heartland Park Topeka on October 10, 2008, the right front shock of SM #12, driven by Mark Drennan, was determined non-compliant in post-race inspection. Jim Graffy, Assistant Chief Steward, Tech issued a Chief Steward's Action (CSA) disqualifying Mr. Drennan, who protested the penalty. The Stewards of the Meet (SOM), Court #2 Anne Christian, Glen Wilhelm, and Tom Brown, Chairman, heard witnesses, observed re-inspections of the shock, and disallowed the protest. Mr. Drennan appealed that decision.

DATE OF THE COURT

The Court of Appeals (COA) Dave Nokes, Dick Templeton, and Bob Horansky, Chairman, met on October 12, 2008, to review, hear, and render a decision.

DOCUMENTS AND OTHER EVIDENCE RECEIVED AND REVIEWED

1. Appeal from Mark Drennan and related material, dated October 12, 2008.
2. SOM Court #2 decision and related documents, received October 12, 2008.
3. Testimony from Tom Brown, Chairman SOM; Mark Drennan, Driver/Owner of SM #12; Jason Hoover, Crew/Preparer for SM #12; Kevin Yaghoubi, Club Racing Technical Coordinator; and John Bauer, Club Racing Technical Manager.
4. Observation of the shock dynamometer testing machine and process.

FINDINGS

Mr. Drennan based his appeal on the fact that there are no published specifications for shock absorbers other than part numbers, making it impossible to determine the compliance of a particular shock. Both Mr. Bauer and Mr. Yaghoubi advised the COA that the manufacturer's specifications are privileged information and that SCCA is bound by a nondisclosure agreement. As a result, compliance criteria have been derived by testing approximately 20 different sets of MazdaSpeed Bilstein 0000-04-5225-BL shocks on a shock dynamometer.

The right front shock from SM #12 repeatedly tested approximately 100% over the baseline readings from the sample sets.

Mr. Bauer reminded the Court that shock testing is available to SCCA competitors for a nominal fee through his department. He added that Mr. Hoover had used that service for a different shock absorber earlier in the week.

DECISION

The Court of Appeals upholds the decision of the SOM. Mr. Drennan's appeal is not well-founded and his appeal fee will be retained by SCCA. The COA reminds all competitors of GCR Appendix C, Section 2: "Any specifications not listed herein shall meet stock factory specifications unless otherwise specified or unrestricted."

SOLO EVENTS BOARD MINUTES

SEB MINUTES | *Feb. 27, 2008*

The Solo Events Board met by conference call October 22nd. Attending were SEB members Dave Whitworth, Tina Reeves, Steve Wynveen, Jason Isley, Erik Strelnieks, Chris Dorsey, and Donnie Barnes; Lisa Noble of the BOD; and Doug Gill, Howard Duncan, and Brian Harmer of the National Staff. Absent was Ron Bauer. These minutes are presented in topical order rather than the order discussed.

Unless noted otherwise the effective date for all rule, class, and listing change proposals herein is 1/1/2010.

GENERAL

- SEB positions will be open at the end of 2008. Interested members are invited to submit their qualifications in writing to the SEB and BOD via the National Office.

STOCK

- The SEB has approved the addition of Scott Hoffman to the SAC.

STREET TOURING

- The STAC has recommended the following proposal, which is being published here for member review and feedback: Add a new subsection 14.2.H as follows (ref. 08-535):

  H. Longitudinal (fore-aft) subframe connectors ("SFCs") are permitted with the following restrictions:

  1. They must only connect previously unconnected boxed frame rails on unibody vehicles.
  2. Each SFC must attach at no more than three points on the unibody (e.g. front, rear, and one point in between such as a seat mount brace or rocker box brace).
  3. SFCs must be bolted in place and not welded.
  4. No cutting of OE subframes or floorpan stampings is permitted. Drilling is permitted for mounting bolts only.
  5. No cross-car/lateral/triangulated connections directly between the driver's side and passenger's side SFCs are permitted. Connections to OE components such as tunnel braces or closure panels via bolts are allowed and count as the third point of attachment. No alteration to the OE components is permitted.
  6. SFCs may not be used to attach other components (including but not limited to torque arm front mounts or driveshaft loops) and may serve no other purpose.

STREET MODIFIED

- The SMAC has recommended the following proposal, published here for member review and feedback: Add to the third paragraph of 16.1.L: "Wings must stay in a fixed position while the vehicle is on course. Wings designed to be adjustable while the car is in motion must be locked in a single position"

PREPARED

- The SEB approved the appointment of Chris Dorsey to the PAC.

MODIFIED

- The SEB approved the appointment of Dave Whitworth and Karen Babb to the MAC.

F125

- The KAC has recommended the following rule change proposal, published here for member comment: Remove the second portion of the last sentence from 19.1.c.2, such that the sentence reads: "The addition of front brakes is optional."

NOT RECOMMENDED

- Classing of Noble M400, M12 in Prepared (ref. 08-522) *Comment*: there are concerns about verification and the consistency of builds from one car to the next.
- GP weight formula and carburetion (ref. 08-591) *Comment*: unlimited carburetion could upset the competitive balance of the class. The PAC is sympathetic to parts availability situations and is researching the issue.
- Wings in ST (ref. 08-596) *Comment:* 14.2.F controls the "significant" function of a wing by limiting its area.
- Steering wheels in ST (ref. 08-521) *Comment*: the Stock allowances apply.
- EM weight changes (ref. 08-600)

TECH BULLETINS

1. Modified: The previously-approved changes to Section 18 regarding wing area calculation supersede the reference to 12.9 in Section 18.2.4. The latter will be revised to read "...calculated as described herein."

2. Modified: References to the "SRFS" in the B Modified portions of Appendix A are out of date and will be simplified to refer to the GCR.

3. Modified: Change the last sentence of 18.1.A.4 to: "The seat must be mounted such that no part of the drivers body below the waist may cross the longitudinal centerline of the car." (ref. 08-497)

4. Street Mod: The 2009 rule change which provides a minimum weight reduction for the use of size 275 or smaller tires will appear in Appendix A. Section 16.2 references Appendix A regarding weights and adjustments.

5. Street Prepared: The DSP Honda Civic ('06+) listing in DSP should read: "Civic VTEC & SOHC ('96+)"

6. Street Touring: Per the STAC, for the 2002-2007 Subaru WRX, the heat shield attached to both the turbo and downpipe is an exhaust heat shield and is therefore subject to "minimal modification" allowed in 14.10.D, but not removal. Note: this supersedes the previously issued Tech Bulletin and is based on further information supplied by affected competitors. Please refer to the opening paragraphs of Appendix F regarding the nature of clarifications. (ref. 08-349, 08-583)

7. Stock: The SAC recommends and the SEB concurs that the wording of 13.5.E (holes for routing shock absorber remote reservoirs) is adequate, and requires no changes at this time. Allowing routing holes for reservoir hoses does not provide an advantage, because the adjuster is accessible whether it is inside the car or under the car.

8. The wording of the clarification to 13.5.A, published in the November issue of *Fastrack* has been revised. 13.5.A will now read:

   "A. The make of shock absorbers*, struts, and strut housings* may be substituted providing that the number, type (e.g., tube, lever, etc.), system of attachment and attachment points are not altered, except as noted below. The interchange of gas and hydraulic shocks absorbers*/struts* is permitted. The following restrictions apply:

   1. No more than two separate external shock damping adjustment controls. This permits the use of shocks which originally came with more than two external adjustments, which have been converted to double-adjustables, only if the additional adjustment controls have been permanently disabled (e.g. via welding, epoxying, grinding off). Gas pressure adjustment is not considered a damping adjustment.

   2. Suspension geometry and alignment capability, not including ride height, may not be altered by the substitution of alternate shock absorbers. *This includes the position of the steering arm attachment point in the case of struts with integrated steering arms."*

9. The wording of the clarification to 13.10.E, published in the November issue of Fastrack has been revised. The first sentence of 13.10.E will now read:

"E. Any part of the exhaust system beyond (downstream from) the header/manifold or catalytic converter, if so equipped, may be substituted *or removed* provided the system meets the requirements of 3.5 *and 3.3.3.B.15*.

10. Stock: Per the SAC, only a 2007 model Miata may be converted to the 2007 MS-R package. To date the MSR package was only offered in MY 2007, therefore conversions are only possible for that year. Option package conversions must be complete. See Section 13, third paragraph. (ref. 08-577)

11. Stock: The Appendix A, C Stock listing for the '06+ MX-5 should read: "MX-5 ('06+) including MS-R ('07)"

12. Stock: Add to 13.1: "All repairs must comply with factory authorized methods and procedures." (ref. 08-587)

13. Stock: Per the SAC, studs and bolts are not considered "similar items" and conversion between them is not allowed, except as per Section 13.4. (ref. 08-477)

14. Stock: The following new listing, effective immediately upon publication, has been recommended by the SAC and approved by the SEB: Mitsubishi Lancer Rallliart ('09+), DS.

15. Stock: The SAC has recommended adding the Lotus Exige supercharged to the Stock exclusion list. This car is very similar to the Elise S/C which is already there, and was inadvertently overlooked.

16. Stock: Per the SAC, the SS listing under BMW for "M3 (E90)" is clarified to read "M3 ('08+)"

17. Stock: Per the SAC, the SS listings under BMW for the M Roadster and M Coupe/Roadster are clarified to read "Z4 M Coupe and Roadster ('06+)". Similarly, the AS listings for the non-M variants are clarified to read "Z4 Coupe & Roadster non-M ('06+)."

18. Stock: Per the SAC, the Cobalt listings in GS are clarified to read:

    Cobalt 2.4L
    Cobalt SS S/C

ROADRALLY BOARD MINUTES

RRB MINUTES | *Sept. 3, 2008*

The *RoadRally* Board (RRB) met via conference call on September 3, 2008.

Attending were: Kevin Poirier, Chairman; Charles Edwards, Secretary; Duck Allen, Board of Directors Liaison; and members Rick Beattie, Lois Van Vleet and Jim Wakemen Jr. Pego Mack, National Office, could not attend.

Chairman Poirier called the meeting to order at approximately 7:30 pm CDT.

The final version of the August, 2008, minutes was accepted.

Proceedings

1. National Rallies – Previous Events

Discussion: This past weekend's DC Region well run events were discussed.

2. National Rallies – Future Events

Discussion: Beattie reported as liaison for the Wisconsin Course events that both rallies will be very challenging.

Poirier reported for the USRRC committee that the planning for the events was proceeding on schedule.

3. 2009 SCCA Convention

Discussion: At the Convention, the RRB will host two seminar sessions on Friday, a Town Hall meeting on Saturday, and meet with the BoD Sunday morning.

4. 2009 RRR Changes

Discussion: Following posting to the membership last month, the RRB took the following actions and recommended to the BoD as noted the following changes to the RRRs:

A1. Regional Events and Combining Classes APPROVED as amended.

In Article 8, move Art.8.B - Eligibility to Art.8.A and re-title Art.8.A as Art.8.B.

Revise the new Art.8.B.4 to read: "Champions in each category shall be determined by the accumulation of points earned in SCCA ***RoadRally*** championship events in each series up to a maximum of 100 points. Regional rallies may account for a maximum of 70 of these points in each series.

Insert into Art.8.C as the last sentence (after the points table): "Regional rallies count as one event, National rallies count as two events, and a USRRC rally counts as three events."

A5. Separation of Appendices - APPROVED

Remove Appendix A – Safety Inspection from the RRRs and keep it as a separate document. Add a new section, Art.2.E: "All SCCA sanctioned roadrallies must have a safety precheck performed by a qualified ***RoadRally*** Safety Steward." Remove from Art.2.D.8 the reference to Appendix A.

Remove all appendices from the RFOs to be kept as separate documents and referenced as such. The appendices will be re-titled and the titles revised on the website.

A6. GPS Devices – APPROVED as amended

Add to Art.11 as the second sentence in the first paragraph: "GPS devices not connected to another calculating device (computer, calculator, etc.) are permissible in any of the three classes."

A7. Gervais Award and Tour Rally of the Year Award - APPROVED

Change the RoadRally Rules, Appendix C, Article B (Gervais Award) and Appendix C, Article C (Tour Rally of the Year) to allow selection of these awards by the top 20 competitors who have competed in three events, instead of four events as the rules currently state. The specific change to those Articles is: "Selection is made by vote of the top 20 competitors in each class who have competed in at least **three** events." It is effective for the 2008 season.

Next meeting

October 1, 2008, at 7:30 pm CDT via conference call.

The meeting was adjourned at approximately 9:00 pm CDT.

Submitted by Rick Beattie

ROADRALLY BOARD MINUTES

RRB MINUTES | *Oct. 1, 2008*

The *RoadRally* Board (RRB) met via conference call at 7:30 pm Central Time.

Attending were: Kevin Poirier, Chairman; members Rick Beattie, Charles Edwards, Lois Van Vleet and Jim Wakemen Jr.; Duck Allen, Board of Directors; and Pego Mack, National Office

Chairman Poirier called the meeting to order at 7:30 pm CDT.

The final version of the September 2008, minutes was not available.

Proceedings

1. Championship scorekeeping

On vote 3:1 it was resolved the term Annual Members will be inserted into the RRRs to restrict pointskeeping to those members.

2. Rules changes

By vote 3:1 it was resolved to retain and enforce the submission deadline for new rules.

3. Convention

The 2009 convention in Las Vegas was discussed.

4. RRB Vacancies

Two members will be asked to join the RoadRally Board. A proposal to add a third new member was defeated. Chuck Edwards will retire after the USRRC. Kevin Poirier reminded RRB members that the forthcoming year will be his final year as chairman.

5. Upcoming national rallies

Quantum Leap was discussed. The USRRC is coming together and should be ready in time to meet the schedule.

6. RoadRally Safety Stewards

A RRSS Manual is being developed and will be available in the new competition year.

7. Timewise Odometer

The Timewise Odometer will be included in Class L because of its superior accuracy and the fact that it is not stock in any car. It will not be in Class E because it does not accumulate data.

Next meeting

November 5, 2008, at 7:30 pm CDT via conference call.

The meeting was adjourned at 10 pm CDT.

Submitted by Chuck Edwards, Meeting Secretary

ROADRALLY BOARD MINUTES

RRB MINUTES | *Nov. 5, 2008*

The *RoadRally* Board (RRB) met via conference call on November 5, 2008.

Attending were: Kevin Poirier, Chairman; members Rick Beattie, Jim Wakemen and Lois Van Vleet; Duck Allen, Board of Directors Liaison; and Pego Mack, National Office. Guests were Jeanne English and Sasha Lanz.

Chairman Poirier called the meeting to order at 7:30 pm CST.

Proceedings

1. Event Reports - USRRC 2008 Recap

Discussion: Kevin Poirier reported 18 cars for the GTA, 21 cars for the Course and Tour Event. In summary, the USRRC was a success.

2. USRRC 2009

Discussion: Next years USRRC will be announced by the 2009 SCCA Convention in Las Vegas. The board is still looking for a committee/region to host the next USRRC.

3. SCCA Convention, February 19-23, 2009

Discussion: The board will host 2 sessions on Friday and the Town Hall Meeting on Saturday. Sunday morning the board will meet

with the Board of Directors.

4. RRB Officers for 2009
Discussion: For 2009: Rick Beattie as Chairman, Lois Van Vleet as Secretary, Jim Wakemen as Rules Committee Liaison, Sasha Lanz as Divisional Safety Steward Liaison, Jeanne English as RR Calendar Coordinator. Pending approval by the Board of Directors

Larry Scholnick has offered to replace Jeanne English as Southern Pacific RoadRally Steward. A notice will be placed in Fastrack about the open position.

5. Old Business
Discussion: The board approved the next RoadRally regional event in Arizona.

Photo Contest: 7 people and 25 photos received. The winner will be announced at the 2009 Convention. Due to the lack of entries, the board discussed next years photo contest.

The board discussed Rules for combining classes for 2010. The Rules Committee was opposed to combining classes for 2009.

6. New Business
Discussion: The GTA Handbook needs editing for 2009.

The first Wednesday of the month, 7:30 CST, will remain the RoadRally Board Meeting date and time for 2009.

Pego reported preliminary numbers for 2008 . Not all audits are in yet but the numbers stand as: 1022 Cars and 158 Events for 2008. Compared to 2201 Cars and 190 Events for 2007.

Action items

- ✓ Beattie: Send the photos to the judges to vote on.
- ✓ Beattie: Edit the GTA Handbook for 2009.

Next meeting
December 3, 2008, at 7:30 pm CST via conference call.

The meeting was adjourned at 9:05 pm CST (Van Vleet/Wakeman).

Submitted by Lois Van Vleet, RRB Secretary

RALLYCROSS BOARD MEMORANDUM

November 18, 2008

The RallyCross Board is seeking candidates for RallyCross Board. Please forward a Rally resume and letter of intent to the rxb@scca.com

QUICK LINKS

The following items have been removed from regular inclusion in FasTrack News and can be found on SCCA's Web site at the following links:

CLUB RACING

Accredited Driver Licensing Schools: http://www.scca.com/contentpage.aspx?content=39

Forms: http://www.scca.com/contentpage.aspx?content=45

Technical Forms: http://www.scca.com/contentpage.aspx?content=74

Scrutineer's Forms: http://www.scca.com/contentpage.aspx?content=77

Vehicle Homologation Forms: http://www.scca.com/contentpage.aspx?content=79

General Competition Rules (GCR): http://www.scca.com/contentpage.aspx?content=44

SOLO

Forms: http://www.scca.com/contentpage.aspx?content=60

Rulebook: http://www.scca.com/contentpage.aspx?content=61

RALLY

Forms: http://www.scca.com/contentpage.aspx?content=49

Rulebook: http://www.scca.com/contentpage.aspx?content=50

SCCA NATIONAL CONVENTION

Event page: http://www.scca.com/event.aspx?hub=6&event=13059

EVENT CALENDAR: http://www.scca.com/events.aspx?hub=10